APPLICATION		REVISIONS			
NEXT ASSY	USED ON	SYM	DESCRIPTION	DATE	APPROVAL
1900064		A	CHANGE IN ACCORDANCE WITH CM 193236	21 JAN 64	JJJ DLF
		B	CHANGE IN ACCORDANCE WITH CM 193233	24 JAN 64	JJJ DLF
		C	CHANGE IN ACCORDANCE WITH CM 193516	29 JAN 64	JJJ DLF
		D	CHANGE IN ACCORDANCE WITH CM 193621	2 FEB 64	JJJ DLF
		E	CHANGE IN ACCORDANCE WITH CM 193761 TDRR 11 J	5 FEB 64	JJJ DLF
		F	CHANGE IN ACCORDANCE WITH CM 193903 TDRR 11 J	10 FEB 64	JJJ DLF
		G	CHANGE IN ACCORDANCE WITH CM 194424 TDRR 09344	13 FEB 64	JJJ DLF
		H	CHANGE IN ACCORDANCE WITH CM 194497 TDRR 09345	18 FEB 64	JJJ DLF
		J	CHANGE IN ACCORDANCE WITH CM 194515	23 FEB 64	JJJ DLF
		K	CHANGE IN ACCORDANCE WITH CM 194612	3 MAR 64	JJJ DLF

FOR INFORMATION ONLY

CLASS B RELEASE TDR No. 05624 DATE 1/3/64

REV	AR	AR	AR	AR	AR	AR	AR	AR	AR	AR	AR	AR	AR	AR	AR	AR	AR	AR	AR	AR	AR	AR	AR	AR	AR	AR	AR
SHEET	15	16	17	18	19	20	21	22	23	24	25	26	27	28	29	30	31	32	33	34	35	36	37	38	39	40	
REV STATUS OF SHEETS																											
SHEET																											

REV	AU	AU	AU	AU	AR	AR	AR	AR	AR	AR	AR	AR	AU	AU	AU	AU	AR	AR
SHEET	1A	1	2	3	4	5	6	7	8	9	10	11	12	13	14			

"C" SPARK PLUG DIVISION, GMC
MILWAUKEE, WISCONSIN

ACSP PN

DRAWN Ferguson 13 Nov 63
CHECKED DATE 25 Nov 63
APPROVAL 25 Nov 63
APPROVAL Gelman 1/3/64

MANNED SPACECRAFT CENTER
HOUSTON, TEXAS

WIRING HARNESS B & FRAME ASSY

NASA APPROVAL
MIT APPROVAL

CODE IDENT NO	SIZE		REV
	A	1900943	AU

CONTRACT NAS9-497 SCALE — SHEET 1 OF 188

REVISIONS			
SYM	DESCRIPTION	DATE	APPROVAL
L	CHANGE IN ACCORDANCE WITH CM 194897 PER TDRR 09346	20 MAR 64	JJJ DLF
M	CHANGE IN ACCORDANCE WITH CM 195274	20 MAR 64	JJJ DLF
N	CHANGE IN ACCORDANCE WITH CM 195283	20 MAR 64	JJJ DLF
P	CHANGE IN ACCORDANCE WITH CM 195283 PER TDRR 09347	20 MAR 64	JJJ DLF
R	CHANGE IN ACCORDANCE WITH CM 195368 PER TDRR 09348	20 MAR 64	JJJ DLF
S	CHANGE IN ACCORDANCE WITH CM 195506	20 MAR 64	JJJ DLF
T	CHANGE IN ACCORDANCE WITH CM 195503 PER TDRR 09349	20 MAR 64	JJJ DLF
U	CHANGE IN ACCORDANCE WITH CM 195602 PER TDRR 09350	20 MAR 64	JJJ DLF
V	CHANGE IN ACCORDANCE WITH CM 195641	20 MAR 64	JJJ DLF
W	CHANGE IN ACCORDANCE WITH CM 200707 PER TDRR 09351	20 MAR 64	JJJ DLF
Y	CHANGE IN ACCORDANCE WITH CM 195888 PER TDRR 09352	20 MAR 64	JJJ DLF
Z	CHANGE IN ACCORDANCE WITH CM 195889 PER TDRR 09353	20 MAR 64	JJJ DLF
AA	CHANGE IN ACCORDANCE WITH CM 200737 PER TDRR 09354	20 MAR 64	JJJ DLF
AB	CHANGE IN ACCORDANCE WITH CM 195976 PER TDRR 09355	20 MAR 64	JJJ DLF
AC	CHANGE IN ACCORDANCE WITH CM 196321 PER TDRR 09356	20 MAR 64	JJJ DLF
AD	CHANGE IN ACCORDANCE WITH CM 200747 PER TDRR 09357	24 APR 64	JWP DLF
AE	CHANGE IN ACCORDANCE WITH CM 197003 PER TDRR 10228	15 MAY 64	WCK
AF	CHANGE IN ACCORDANCE WITH CM 197004 PER TDRR 10693	27 MAY 64	JWP
AG	CHANGE IN ACCORDANCE WITH CM 197017 PER TDRR 10694	28 MAY 64	BK
AH	CHANGE IN ACCORDANCE WITH CM 197067 PER TDRR 10695	4 JUNE 64	JK FK
AJ	CHANGE IN ACCORDANCE WITH CM 197490	12 JUN 64	JJJ JRB

MANNED SPACECRAFT CENTER HOUSTON, TEXAS	REVISION AR	NASA DRAWING NO. 1900943 SHEET 1A OF 188

REVISIONS			
SYM	DESCRIPTION	DATE	APPROVAL
AK	CHANGE IN ACCORDANCE WITH CM 197686	15 JUN 64	JWP FK
AL	CHANGE IN ACCORDANCE WITH CM 197687	17 JUN 64	JW PBR
AM	CHANGE IN ACCORDANCE WITH CM 197966	17 JUN 64	JW PBR
AN	CHANGE IN ACCORDANCE WITH CM 198197	18 JUN 64	JW PBR
AP	CHANGE IN ACCORDANCE WITH CM 198676 PER TDRR 12900	30 JUL 64	JWP AU
AR	CHANGE IN ACCORDANCE WITH CM 198784 TDRR 12901	10 AUG 64	JW W.S.
AS	CHANGE IN ACCORDANCE WITH CM 199049 TDRR 12902	19 AUG 64	GG W.S.
AT	CHANGE IN ACCORDANCE WITH CM 199405 TDRR 12903	28 AUG 64	JJJ
AU	CHANGE IN ACCORDANCE WITH CM 199406 TDRR 12412	8 SEP 64	MG

MANNED SPACECRAFT CENTER HOUSTON, TEXAS	REVISION AU	NASA DRAWING NO. 1900943 SHEET 1B OF 188

REVISION STATUS OF SHEETS

SH	REV	SH	REV	SH	REV	SH	REV	SH	REV	SH	REV	SH	REV	SH	REV
41	AR	77	AR	113	AR	149	AR	185	AR						
42	AR	78	AR	114	AR	150	AR	186	AR						
43	AR	79	AR	115	AR	151	AR	187	AR						
44	AR	80	AR	116	AR	152	AR	188	AR						
45	AR	81	AR	117	AR	153	AR								
46	AR	82	AR	118	AR	154	AR								
47	AR	83	AR	119	AR	155	AR								
48	AR	84	AR	120	AR	156	AR								
49	AR	85	AR	121	AR	157	AR								
50	AR	86	AR	122	AR	158	AR								
51	AR	87	AR	123	AR	159	AR								
52	AR	88	AR	124	AR	160	AR								
53	AR	89	AR	125	AR	161	AR								
54	AR	90	AR	126	AR	162	AR								
55	AR	91	AR	127	AR	163	AR								
56	AR	92	AR	128	AR	164	AR								
57	AR	93	AR	129	AR	165	AR								
58	AR	94	AR	130	AR	166	AR								
59	AR	95	AR	131	AR	167	AR								
60	AR	96	AR	132	AR	168	AR								
61	AR	97	AR	133	AR	169	AR								
62	AR	98	AR	134	AR	170	AR								
63	AR	99	AR	135	AR	171	AR								
64	AR	100	AR	136	AR	172	AR								
65	AR	101	AR	137	AR	173	AR								
66	AR	102	AR	138	AR	174	AR								
67	AR	103	AR	139	AR	175	AU								
68	AR	104	AR	140	AR	176	AT								
69	AR	105	AR	141	AR	177	AK								
70	AR	106	AR	142	AR	178	AR								
71	AR	107	AR	143	AR	179	AR								
72	AR	108	AR	144	AR	180	AR								
73	AR	109	AR	145	AR	181	AS								
74	AR	110	AR	146	AR	182	AU								
75	AR	111	AR	147	AR	183	AR								
76	AR	112	AR	148	AR	184	AR								

MANNED SPACECRAFT CENTER HOUSTON, TEXAS	REVISION AU	NASA DRAWING NO. 1900943 SHEET 2 OF 188

CONDUCTOR INDIVIDUAL LENGTH NUMBER	ITEM NO.	2	FROM CUT WIRE OR SHIELD STRIP WIRE OR JACKET CIRCUIT POINT	2	TIN	2	TERMINATION SPEC. 1 ITEM NO.				NO.	TO CUT WIRE OR SHIELD STRIP WIRE OR JACKET CIRCUIT POINT	2	TIN	2	TERMINATION SPEC. 1 ITEM NO.				NO.
B 899	65			225		200	86	87	856				225		200	86	87	856			
B 899A	41		SHLD B 899	25N								TB17- 46CD	16N			107					
B 899B	41		P15-N*	25N								SHLD B 899	25N								
B 899E			TB17- 46AB	16N			107					P15-M*	25N								
B 900	65			225		200	86	87	856				225		200	86	87	856			
B 900A	41		SHLD B 900	25N								TB17- 45CD	16N			107					
B 900B	41		P15-K*	25N								SHLD B 900	25N								
B 900E			TB17- 45AB	16N			107					P15-J*	25N								
B 901	65			225		200	86	87	856				225		200	86	87	856			
B 901A	41		SHLD B 901	25N								TB17- 44CD	16N			107					
B 901B	41		P15-P*	25N								SHLD B 901	25N								
B 901E			TB17- 44AB	16N			107					P15-Q*	25N								
B 902	65			225		200	86	87	856				225		200	86	87	856			
B 902A	41		SHLD B 902	25N								P14-T	25N								
B 902B	41		TB17- 43CD	16N			107					SHLD B 902	25N								
B 902E			P14-S	25N								TB17- 43AB	16N			107					
B 903	65			225		200	86	87	856				225		200	86	87	856			
B 903A	41		SHLD B 903	25N								P15-I*	25N								

1 THE STD CONDUCTOR TERMINATION FIGURES ARE PER
2 DIMENSIONS ARE IN INCHES AND TWO PLACE DECIMALS.

MANNED SPACECRAFT CENTER HOUSTON, TEXAS | SIZE A | 1900943
SCALE - NONE | REV LTR AR | SHEET 116 OF 188

MIL 2089 - 4-63 WIR

CONDUCTOR INDIVIDUAL LENGTH NUMBER	ITEM NO.	2	FROM CUT WIRE OR SHIELD STRIP WIRE OR JACKET CIRCUIT POINT	2	TIN	2	TERMINATION SPEC. 1 ITEM NO.				NO.	TO CUT WIRE OR SHIELD STRIP WIRE OR JACKET CIRCUIT POINT	2	TIN	2	TERMINATION SPEC. 1 ITEM NO.				NO.
B 903B	41		TB17- 42CD	16N			107					SHLD B 903	25N								
B 903E			P15-H*	25N								TB17- 42AB	16N			107					
B 904	65			225		200	86	87	856				225		200	86	87	856			
B 904A	41		SHLD B 904	25N								P15-V	25N								
B 904B	41		TB17- 41CD	16N			107					SHLD B 904	25N								
B 904E			P15-U	25N								TB17- 41AB	16N			107					
B 905	65			225		200	86	87	856				225		200	86	87	856			
B 905A	41		SHLD B 905	25N								P15-G*	25N								
B 905B	41		TB17- 40CD	16N			107					SHLD B 905	25N								
B 905E			P15-F*	25N								TB17- 40AB	16N			107					
B 906	65			52		23	90	91	7				225		200	86	87	856			
B 906B	41		P17-B*	25N								SHLD B 906									
B 906E			P 7-C1	11N			89					P17-A*	25N								
B 906X			P 7-C2									SHLD B 906									
B 907	46			225		200	89		7				400		370	48	52	846			
B 907B	41		TB22- 88	16N			107					SHLD B 907	25N								
B 907L			P10-C*	25N								TB22- 86	16N			107					
B 907R			P10-B*	25N								TB22- 87	16N			107					

1 THE STD CONDUCTOR TERMINATION FIGURES ARE PER
2 DIMENSIONS ARE IN INCHES AND TWO PLACE DECIMALS.

MANNED SPACECRAFT CENTER HOUSTON, TEXAS | SIZE A | 1900943
SCALE - NONE | REV LTR AR | SHEET 117 OF 188

MIL 2089 - 4-63 WIR

CONDUCTOR INDIVIDUAL LENGTH NUMBER	ITEM NO.	2	FROM CUT WIRE OR SHIELD STRIP WIRE OR JACKET CIRCUIT POINT	2	TIN	2	TERMINATION SPEC. 1 ITEM NO.				NO.	TO CUT WIRE OR SHIELD STRIP WIRE OR JACKET CIRCUIT POINT	2	TIN	2	TERMINATION SPEC 1 ITEM NO.				NO.
B 908	46			225		200	85		7				400		370	48	52	846			
B 908B	41		TB22- 85	16N			107					SHLD B 908	25N								
B 908L			P10-N*	25N								TB22- 83	16N			107					
B 908R			P10-M*	25N								TB22- 84	16N			107					
B 909	46			225		200	85		7				400		370	48	52	846			
B 909B	41		TB22- 82	16N			107					SHLD B 909	25N								
B 909L			P85-C*	25N								TB22- 80	16N			107					
B 909R			P85-B*	25N								TB22- 81	16N			107					
B 910	07			225		200	120						225		200	117	118	856			
B 910B	41		TB22- 58	16N			107					SHLD B 910	25N								
B 910M			J22-M*	25N								TB22- 57AB	16N			107					
B 911	42		J22-N*	25N								TB22- 57CD	16N			107					
B 912	41		P11-T*	25N								TB25- 10	20N			111					
B 913	16		J 3-BB	25N								TB23- 15	20N			111					
B 914	42		J22-C*	25N								TB20- 81AB	16N			107					
B 915	65			225		200	86	87	856				225		200	86	87	856			
B 915A	41		SHLD B 915	25N								TB17- 37CD	16N			107					
B 915B	41		P15-T	25N								SHLD B 915	25N								

1 THE STD CONDUCTOR TERMINATION FIGURES ARE PER
2 DIMENSIONS ARE IN INCHES AND TWO PLACE DECIMALS.

MANNED SPACECRAFT CENTER HOUSTON, TEXAS | SIZE A | 1900943
SCALE - NONE | REV LTR AR | SHEET 118 OF 188

MIL 2089 - 4-63 WIR

CONDUCTOR INDIVIDUAL LENGTH NUMBER	ITEM NO.	2	FROM CUT WIRE OR SHIELD STRIP WIRE OR JACKET CIRCUIT POINT	2	TIN	2	TERMINATION SPEC. 1 ITEM NO.				NO.	TO CUT WIRE OR SHIELD STRIP WIRE OR JACKET CIRCUIT POINT	2	TIN	2	TERMINATION SPEC 1 ITEM NO.				NO.
B 915E			TB17- 37AB	16N			107					P15-S	25N								
B 916	65			225		200	86	87	856				225		200	86	87	856			
B 916A	41		SHLD B 916	25N								TB17- 36CD	16N			107					
B 916B	41		P15-P	25N								SHLD B 916	25N								
B 916E			TB17- 36AB	16N			107					P15-R	25N								
B 917	65			225		200	86	87	856				225		200	86	87	856			
B 917A	41		SHLD B 917	25N								TB17- 35CD	16N			107					
B 917B	41		P15-D	25N								SHLD B 917	25N								
B 917E			TB17- 35AB	16N			107					P15-E	25N								
B 918	65			225		200	86	87	856				225		200	86	87	856			
B 918A	41		SHLD B 918	25N								TB17- 34CD	16N			107					
B 918B	41		P15-H	25N								SHLD B 918	25N								
B 918E			TB17- 34AB	16N			107					P15-J	25N								
B 919	65			225		200	86	87	856				225		200	86	87	856			
B 919A	41		SHLD B 919	25N								TB17- 33CD	16N			107					
B 919B	41		P15-B	25N								SHLD B 919	25N								
B 919E			TB17- 33AB	16N			107					P15-C	25N								
B 920	65			225		200	86	87	856				225		200	86	87	856			

1 THE STD CONDUCTOR TERMINATION FIGURES ARE PER
2 DIMENSIONS ARE IN INCHES AND TWO PLACE DECIMALS.

MANNED SPACECRAFT CENTER HOUSTON, TEXAS | SIZE A | 1900943
SCALE - NONE | REV LTR AR | SHEET 119 OF 188

MIL 2089 - 4-63 WIR

PENNANT NOTE — GENERAL NOTES

1 SEE CONDUCTOR CHART. PENNANT NOTE 1.

2 SEE CONDUCTOR CHART. PENNANT NOTE 2.

3 INTERPRET DRAWING IN ACCORDANCE WITH STANDARDS PRESCRIBED BY MIL-D-70327.

4 MARK CONDUCTOR IDENTIFICATION PER ND1002019.

5 MARK CONDUCTOR IDENTIFICATION ON SINGLE CONDUCTORS PER ND1002019 OMITTING ALL SUFFIX LETTERS EXCEPT A AND B.

6 SPACING OF CONDUCTOR IDENTIFICATION SHALL BE EVERY 1.2 INCHES.

7 SPIRALLING OF THE MARKING IS ALLOWED.

8 MARK SLEEVING WITH REFERENCE DESIGNATION AS SHOWN .12 INCH HIGH. COLOR BLACK PER ND1002019.

9 MARK SLEEVING OF MULTI-CONDUCTORS WITH THE CONDUCTOR NUMBER .12 INCH HIGH. COLOR BLACK. PER ND1002019 WHEN SLEEVING ITEM NUMBERS FOLLOW AN A OR T IN THE ACCESSORIES ITEM NUMBER FIELD.

10 A OR T PREFIX IN THE ACCESSORIES ITEM NUMBER COLUMN INDICATES THE READING POSITION AWAY FROM TERMINATION OR TOWARD TERMINATION RESPECTIVELY. OF THE WIRE MARKER SLEEVE.

11 LACE HARNESS USING ITEM 180

12 IDENTIFY USING DRAWING NO. AND REVISION LETTER PER ND1002019 (ES-267).

13 SOLDER PER MIL-STD-440 USING ITEMS 181 AND 182

14 Y OR N IN TINNED COLUMN INDICATES YES OR NO.

PENNANT NOTE — GENERAL NOTES

15 A LETTER WITH AN ASTERISK SUFFIX INDICATES A LOWER CASE LETTER.

16 BREAKOUTS OF INDIVIDUAL OR GROUPS OF CONDUCTORS ARE MINIMUM CONFIGURATION.

17 VENDOR ITEM - SEE SPECIFICATION CONTROL DRAWING.

18 SELECT AS REQUIRED.

19 FILL THE SPACE BETWEEN WIRE AND GROMMET USING A SUFFICIENT AMOUNT OF ITEM 156 TO MAKE ASSEMBLY SECURE IN THE CLAMP PRIOR TO THE CLAMP HALVES SEATING. SEE TYPICAL VIEW AD-AD SHOWING ASSEMBLY OF GROMMET AND ITEM 156.

20 THE FOLLOWING CONDUCTORS ARE TO BE TWISTED TOGETHER IN ACCORDANCE WITH THE BEST COMMERCIAL PRACTICE. THEY SHALL BE TWISTED WITH A LAY NOT GREATER THAN 14 TIMES NOR LESS THAN 8 TIMES THE PITCH DIA.
B36K. B36L. B36R. B36Y

21 DELETED

22 MARK ITEMS 58 AND 176 PER ND1002019. COLOR BLACK. HEIGHT AS SHOWN IN VIEWS X-X AND Y-Y. MARK WITH HARNESS PLUG DESIGNATION AND MATING DRAWER RECEPTACLE SYMBOL. FOR ITEM 58 SEE TABLE 2 AND VIEW X-X. FOR ITEM 176 SEE TABLE 3 AND VIEW Y-Y. SEE NOTE 24 FOR FASTENING.

PENNANT NOTE — GENERAL NOTES

23 TUBING SHALL EXTEND INTO FRAME CLAMP AND 1 INCH BEYOND AT ONE END. THE OTHER END SHALL TERMINATE AT THE FIRST SEPARATION IN THE BUNDLE. IF ONLY A SINGLE CABLE EXISTS. TUBING SHALL EXTEND INTO FRAME CLAMP AND 1 INCH BEYOND AT ONE END. THE OTHER END SHALL TERMINATE 3 INCHES FROM THE STRAIN RELIEF CLAMP OF THE CONNECTOR.

24 FASTEN ITEMS 58 AND 176 WITH ITEM 180. WRAP BAND TO CONFORM TO THE HARNESS CONFIGURATION

25 TUBING SHALL EXTEND WITHIN 1 INCH OF BREAKOUT ON ONE END AND TERMINATE 3 INCHES FROM THE STRAIN RELIEF CLAMP OF THE CONNECTOR AT THE OTHER END.

26 MARK BAND WITH AC SPARK PLUG ABBREVIATION ACSK AND IDENTIFY USING DRAWING NO. AND REVISION LETTER PER MIL-STD-130 (ES-267). SERIALIZE PER ND1002023. CHARACTERS .12 HIGH. COLOR BLACK PER ND1002019. SEE NOTE 24 FOR FASTENING.

THE SUFFIX LETTER OF A CONDUCTOR IDENTIFICATION NUMBER INDICATES CONDUCTOR SHIELDING. COLOR. OR MARKING.
A - FROM END SHIELD
B - TO END SHIELD
E - GRAY
K - WHITE WITH LETTER K. OR WHITE WITH BLACK TRACER
L - WHITE WITH LETTER L. OR WHITE WITH BLUE TRACER
R - WHITE WITH LETTER R. OR WHITE WITH RED TRACER
W - WHITE OR WHITE WITH LETTER W
X - COAX OUTER CONDUCTOR
Y - WHITE WITH LETTER Y. OR WHITE WITH YELLOW TRACER

PENNANT NOTE — GENERAL NOTES

TOLERANCE CHART. UNLESS OTHERWISE SPECIFIED ---

APPLICABLE LENGTH FOR WIRE OR CABLE. STRIP WIRE. STRIP JACKET. CUT WIRE OR CUT SHIELD.	TOLERANCE: WIRE OR CABLE	STRIP: WIRE	STRIP: JACKET	CUT: WIRE	CUT: SHIELD
UNDER 1 INCH	+ .06-.00	+.03-.00	+.06-.06	+.06-.06	+.06-.06
1 INCH TO 6 INCHES	+ .50-.00	+.06-.00	+.25-.25	+.25-.25	+.25-.25
6 INCHES TO 6 FEET	+1.00-.00		+.50-.50	+.50-.50	+.50-.50
OVER 6 FEET	+2.00-.00				

LIST OF MATERIALS

PENNANT NOTE	ITEM	QTY	PART NO	DESCRIPTION
	1	1	1900351-011	HARNESS FRAME MECHANICAL ASSY.
	2	1	1900943-002	WIRE, ND1002181 TYPE 2 CLASS 1 T2 16AWG WHT. WITH LETTER L, WHT. WITH LETTER R 50 FT. TOTAL LENGTH
	3			DELETED (1900943-003)
	4	1	MS3106A18-1P	(1897084-010) CONNECTOR PLUG ELECTRICAL
17	5	7	1015922-001	CONNECTOR PLUG ELECTRICAL
	7	1	1900943-007	WIRE, ND1002181 TYPE 1 CLASS 4 22AWG WHT. WITH WHT. JACKET 312 FT. TOTAL LENGTH
	8	1	1900943-008	WIRE, ND1002181 TYPE 2 CLASS 1 T2 22AWG WHT. WITH LETTER L, WHT. WITH LETTER R 60 FT. TOTAL LENGTH
	9			DELETED (1900943-009)
	10	1	MS3126F12-10P	(1897038-100) CONNECTOR PLUG, ELECTRICAL
	11	1	MS3126F12-10S	(1897039-100) CONNECTOR PLUG, ELECTRICAL
	12	1	1900943-012	WIRE, ND1002181 TYPE 2 CLASS 1 T2 24AWG WHT. WITH LETTER L, WHT. WITH LETTER R 60 FT. TOTAL LENGTH
	13	2	MS3126F14-19S	(1897040-190) CONNECTOR PLUG, ELECTRICAL
	15	10	MS3126F16-8S	(1897042-080) CONNECTOR PLUG, ELECTRICAL
	16	1	1900943-016	WIRE, ND1002181 TYPE 1 CLASS 1 20AWG WHT. 500 FT. TOTAL LENGTH

LIST OF MATERIALS

PENNANT NOTE	ITEM	QTY	PART NO	DESCRIPTION
	17	2	MS3126F20-16P	(1897043-160) CONNECTOR PLUG, ELECTRICAL
	18	1	MS3126F20-41P	(1897043-410) CONNECTOR PLUG, ELECTRICAL
	19	1	MS3126F20-41S	(1897044-410) CONNECTOR PLUG, ELECTRICAL
	20	1	MS3126F12-10SW	(1897039-101) CONNECTOR PLUG, ELECTRICAL
	21	1	MS3126F16-8SW	(1897042-081) CONNECTOR PLUG, ELECTRICAL
	22	2	MS3126F22-55P	(1897045-550) CONNECTOR PLUG, ELECTRICAL
	23	1	MS3126F22-55PW	(1897045-551) CONNECTOR PLUG, ELECTRICAL
	24	1	MS3126F22-55PX	(1897045-552) CONNECTOR PLUG, ELECTRICAL
	26	10	MS3126F24-61S	(1897048-610) CONNECTOR PLUG, ELECTRICAL
	27	8	MS3126F24-61SW	(1897048-611) CONNECTOR PLUG, ELECTRICAL
	28	8	MS3126F24-61SX	(1897048-612) CONNECTOR PLUG, ELECTRICAL
	29	2	MS3126F24-61SY	(1897048-613) CONNECTOR PLUG, ELECTRICAL
	30	2	MS3126F24-61SZ	(1897048-614) CONNECTOR PLUG, ELECTRICAL
	32	13	1900448-011	CABLE CLAMP BRACKET ASSY
18	33	107	MS21919-WDG2	THRU MS21919-WDG32 (1897073-202 THRU 1897073-224) CLAMP-LOOP TYPE, CUSHIONED
	34			DELETED
	35			DELETED
	36			DELETED

LIST OF MATERIALS

PENNANT NOTE	ITEM	QTY	PART NO	DESCRIPTION
	37			DELETED
17	38	22	1006783- 44	SCREW, BUTTON HEAD
	39			DELETED (1897082-113)
	40	1	1900943-040	WIRE, ND1002181 TYPE 1, CLASS 1, 16AWG WHT. 100 FT. TOTAL LENGTH
	41	1	1900943-041	WIRE, ND1002181 TYPE 1, CLASS 1, 22AWG WHT. 3012 FT. TOTAL LENGTH
	42	1	1900943-042	WIRE, ND1002181 TYPE 1, CLASS 1, 24AWG WHT. 10,101 FT. TOTAL LENGTH
	44	1	1900943-044	WIRE, ND1002181 TYPE 2, CLASS 4, 16AWG WHT. JACKET, WHT/BLU, WHT/RED 100 FT. TOTAL LENGTH
	45	1	1900943-045	WIRE, ND1002181 TYPE 2, CLASS 4, 20AWG WHT. JACKET, WHT/BLU, WHT/RED 400 FT. TOTAL LENGTH
	46	1	1900943-046	WIRE, ND1002181 TYPE 2, CLASS 4, 24AWG WHT. JACKET, WHT/BLU, WHT/RED 3013 FT. TOTAL LENGTH
	47	1	1900943-047	WIRE, ND1002181 TYPE 2, CLASS 4, 22AWG WHT. JACKET, WHT/BLU, WHT/RED 500 FT. TOTAL LENGTH
17	48	277	1000243- 8	FERRULE, ELEC. COND.
17	49	2	1000243- 10	FERRULE, ELEC. COND.
17	50	26	1000243- 14	FERRULE, ELEC. COND.

LIST OF MATERIALS

PENNANT NOTE	ITEM	QTY	PART NO	DESCRIPTION
17	51	12	1000243- 23	FERRULE, ELEC. COND.
17	52	277	1000242- 8	FERRULE, ELEC. COND.
17	53	4	1000242- 11	FERRULE, ELEC. COND.
17	54	26	1000242- 12	FERRULE, ELEC. COND.
17	55	12	1000242- 18	FERRULE, ELEC. COND.
	56	50	MS35338- 81	LOCKWASHER
	57			DELETED (1897006-017)
22	58	54	1016128-011	BAND, IDENTIFICATION
	59	1	MS3126F22-55SY	(1897046-553) CONNECTOR PLUG, ELECTRICAL
	65	1	1900943-065	COAX-MIL-C-17 RG188/U 1500 FT. TOTAL LENGTH
	66	1	MS3126F20-16S	(1897044-160) CONNECTOR PLUG, ELECTRICAL
	67			DELETED (1897044-411)
	68	1	MS3126F10-6S	(1897026-060) CONNECTOR PLUG, ELECTRICAL
17	69	4	1015907-100	CONNECTOR PLUG, ELECTRICAL
17	70	3	1015907-101	CONNECTOR PLUG, ELECTRICAL
17	71	2	1015907-102	CONNECTOR PLUG, ELECTRICAL
17	72	1	1015907-103	CONNECTOR PLUG, ELECTRICAL
17	73	1	1015907-104	CONNECTOR PLUG, ELECTRICAL

LIST OF MATERIALS

PENNANT NOTE	ITEM	QTY	PART NO	DESCRIPTION
	77	1	MS3127E24-61PY	(1897055-613) CONNECTOR, RECEPTACLE
	78	1	MS3127E24-61PZ	(1897055-614) CONNECTOR, RECEPTACLE
	79	1	MS3127E24-61S	(1897056-610) CONNECTOR, RECEPTACLE
	80			DELETED (1897056-611)
	81			DELETED (1897056-612)
	82			DELETED (1897056-613)
17	83	26	1010490-194	INSULATION-SLEEVING
17	84	347	1010490-196	INSULATION-SLEEVING
17	85	464	1010490-198	INSULATION-SLEEVING
17	86	168	1000243- 6	FERRULE-ELECT. COND.
17	87	168	1000242- 5	FERRULE-ELECT. COND.
	88			DELETED (1015905- 61)
17	89	80	1015908- 11	CONTACT COAX PIN
17	90	80	1015908- 31	BODY COAX OUTER FEMALE
17	91	80	1015908- 51	RING COAX CONNECTOR
	92			DELETED (1010490-202)
	98	1	1900943-098	WIRE, ND1002181 TYPE 3 CLASS 4 22AWG, WHT/BLU, WHT/RED, WHT/YEL WITH WHT. JACKET 500 FT. TOTAL LENGTH

MANNED SPACECRAFT CENTER HOUSTON, TEXAS | SIZE A | 1900943
SCALE-NONE | REV LTR AU | SHEET 11 OF 188

LIST OF MATERIALS

PENNANT NOTE	ITEM	QTY	PART NO	DESCRIPTION
	99	1	1900943-099	WIRE, ND1002181 TYPE 3 CLASS 4 20AWG, WHT/BLU, WHT/RED, WHT/YEL WITH WHT. JACKET 500 FT. TOTAL LENGTH
17	102	2	1000243- 15	FERRULE, ELEC.
17	103	2	1000243- 11	FERRULE, ELEC.
17	104	2	1000242- 16	FERRULE, ELEC.
17	107	1230	1015966-001	JACK-WIRE TIP (AWG 24-22)
17	108	21	1015966-003	JACK-WIRE TIP (AWG 20)
17	111	~~104~~ 19	1015902- 3	TERMINAL LUG-RING TONGUE, CRIMP
	112	1	MS3127E22-55S	(1897054-550) CONNECTOR-RECEPTACLE, ELEC.
	116			DELETED (1015864-168)
17	117	17	1000243- 3	FERRULE-ELEC.
17	118	17	1000243- 4	FERRULE-ELEC.
	119			DELETED (1000243- 15)
17	120	58	1010490-200	INSULATION SLEEVING, ELEC.
	122	1	MS3127E20-41SW	(1897052-411) CONNECTOR-RECEPTACLE
	126	1	MS3127E22-55PX	(1897053-552) CONNECTOR-RECEPTACLE
	127	1	MS3127E22-55SW	(1897054-551) CONNECTOR-RECEPTACLE
17	129	37	1016006-001	SPLICE REDUCER

MANNED SPACECRAFT CENTER HOUSTON, TEXAS | SIZE A | 1900943
SCALE-NONE | REV LTR AU | SHEET 12 OF 188

LIST OF MATERIALS

PENNANT NOTE	ITEM	QTY	PART NO	DESCRIPTION
17	130	16	1016006-002	SPLICE REDUCER
17	131	25	1016006-003	SPLICE REDUCER
	132			DELETED (1015902-008)
	133			DELETED
	141	1	MS3126F24-61PZ	(1897047-614) CONNECTOR-PLUG ELEC.
	143	1	MS3127E20-41PW	(1897051-411) CONNECTOR-RECEPTACLE
	144	1	MS3127E14-15S	(1897116-150) CONNECTOR-RECEPTACLE
	145	1	MS3127E22-55PY	(1897053-553) CONNECTOR-RECEPTACLE
	146	1	MS3127E22-55PZ	(1897053-554) CONNECTOR-RECEPTACLE
	147	1	MS3127E22-55SX	(1897054-552) CONNECTOR-RECEPTACLE
	148	1	MS3127E22-55SY	(1897054-553) CONNECTOR-RECEPTACLE
17	149	2	1016282- 10	GROMMET, CONNECTOR
17	150	3	1016282- 12	GROMMET, CONNECTOR
17	151	2	1016282- 14	GROMMET, CONNECTOR
17	152	12	1016282- 16	GROMMET, CONNECTOR
17	153	5	1016282- 20	GROMMET, CONNECTOR
17	154	22	1016282- 22	GROMMET, CONNECTOR
17	155	31	1016282- 24	GROMMET, CONNECTOR

MANNED SPACECRAFT CENTER HOUSTON, TEXAS | SIZE A | 1900943
SCALE-NONE | REV LTR AR | SHEET 13 OF 188

LIST OF MATERIALS

PENNANT NOTE	ITEM	QTY	PART NO	DESCRIPTION
	156	77	1901390	TAPE, FILLER
17	157	19	1016281-181	SOCKET, CONTACT
	158	5	MS35234-69	SCREW, PAN HD, SLOTTED
	159	108	1897006- 19	WASHER, FLAT
	160	5	1901464-004	SPACER
	161	58	1896990-011	NUT, SELF LOCKING
17	162	50	1006783-043	SCREW, BUTTON HD
	163	2	1901464-002	SPACER
17	164	2	1006783-048	SCREW, BUTTON HD
	165	2	1900448-021	CABLE CLAMP BRACKET ASSY
17	166	2	1016281-180	PIN, CONTACT
17	167	31	1006783-045	SCREW, BUTTON HD.
	168	1	1900943-100	TUBING, MIL-I-7444, TYPE III, BLK, FLEX - .50 DIA - 12 FT TOTAL LENGTH
	169	1	1900943-101	TUBING, MIL-I-7444, TYPE III, BLK, FLEX - .75 DIA - 13 FT TOTAL LENGTH
	170	1	1900943-102	TUBING, MIL-I-7444, TYPE III, BLK, FLEX - .88 DIA - 7 FT TOTAL LENGTH
	171	1	1900943-103	TUBING, MIL-I-7444, TYPE III, BLK, FLEX - 1.00 DIA - 16 FT TOTAL LENGTH

MANNED SPACECRAFT CENTER HOUSTON, TEXAS | SIZE A | 1900943
SCALE-NONE | REV LTR AR | SHEET 14 OF 188

PENNANT LIST OF MATERIALS

NOTE	ITEM	QTY	PART NO	DESCRIPTION
	172	1	1900943-104	TUBING, MIL-I-7444, TYPE III, BLK, FLEX - 1.25 DIA - 20 FT TOTAL LENGTH
	173	1	1900943-105	TUBING, MIL-I-7444, TYPE III, BLK, FLEX - 1.50 DIA - 55 INCHES TOTAL LENGTH
17	174	25	1010490-286	INSULATION SLEEVING
17	175	16	1010490-288	INSULATION SLEEVING
22	176	19	1015864-462	INSULATION SLEEVING
	177			DELETED (1900943-106)
	178	1	1900943-107	WIRE PER ND1002181, TYPE 1, CLASS 1, 8AWG, WHT, 20 FT, TOTAL LENGTH,
17	179	7	1016048- 15	TERMINAL LUG
	180	AR	MIL-T-713	LACING TAPE TYPE P, CLASS 2, BLK (ES-2732 NO, 18 AND 24)
	181	AR	QQ-S-571	SOLDER SN60 (ES-2175 ALLOY 1)
	182	AR	QQ-S-571	FLUX TYPE AR (ES-2175 TYPE 1 OR 2) OR MIL-F-14256 FLUX (ES-2798)
17	183	1	1016048- 18	TERMINAL LUG

MANNED SPACECRAFT CENTER HOUSTON, TEXAS	SIZE A	1900943	
SCALE-NONE	REV LTR AR		SHEET 15 OF 188

CONDUCTOR INDIVIDUAL LENGTH NUMBER	ITEM NO.	2	FROM CUT WIRE OR SHIELD STRIP WIRE OR JACKET CIRCUIT POINT	2	TIN	2	TERMINATION SPEC. 1 ITEM NO.					NO.	TO CUT WIRE OR SHIELD STRIP WIRE OR JACKET CIRCUIT POINT	2	TIN	2	TERMINATION SPEC. 1 ITEM NO.					NO.
B 3	41		E 22	25	N								TB27- 1	16	N		107						
B 4	41		E 22	25	N								TB27- 4	16	N		107						
B 5	41		E 22	25	N								TB27- 7	16	N		107						
B 6	41		E 22	25	N								TB27- 13	16	N		107						
B 7	41		E 16	25	N								TB19- 9	16	N		107						
B 8	41		E 16	25	N								TB19- 7	16	N		107						
B 9	41		E 16	25	N								TB19- 4	16	N		107						
B 10	41		E 16	25	N								TB19- 1	16	N		107						
B 11	44			225		200	83			7				300		270	51	55	836				
B 11B	41		E 47	25	N								SHLD B 11	25	N								
B 11L			P30-E	25	N								TB14- 3	20	N		111						
B 11R			P30-D	25	N								TB14- 1	20	N		111						
B 12	44			225		200	83			7				300		270	51	55	836				
B 12B	41		E 57	25	N								SHLD B 12	25	N								
B 12L			P18-E	25	N								TB15- 3	20	N		111						
B 12R			P18-D	25	N								TB15- 1	20	N		111						
B 13	45			225		200	84			7				300		270	84			7			
B 13B	41		E 50	25	N								SHLD B 13	25	N								

1 THE STD CONDUCTOR TERMINATION FIGURES ARE PER
2 DIMENSIONS ARE IN INCHES AND TWO PLACE DECIMALS.

MANNED SPACECRAFT CENTER HOUSTON, TEXAS | SIZE A | 1900943
SCALE - NONE | REV LTR AR | SHEET 16 OF 188

MIL 2088 - 4-63 WIN

CONDUCTOR INDIVIDUAL LENGTH NUMBER	ITEM NO.	2	FROM CUT WIRE OR SHIELD STRIP WIRE OR JACKET CIRCUIT POINT	2	TIN	2	TERMINATION SPEC. 1 ITEM NO.					NO.	TO CUT WIRE OR SHIELD STRIP WIRE OR JACKET CIRCUIT POINT	2	TIN	2	TERMINATION SPEC. 1 ITEM NO.					NO.
B 13L			P37-F*	25	N								TB 2- 2	20	N		111						
B 13R			P37-G*	25	N								TB 2- 4	20	N		111						
B 14	44			225		200	83			7				300		270	51	55	836				
B 14B	41		E 46	25	N								SHLD B 14	25	N								
B 14L			P50-E	25	N								TB11- 9	20	N		111						
B 14R			P50-D	25	N								TB11- 7	20	N		111						
B 15	41		P34-U	25	N								TB 7- 7	20	N		111						
B 16	40		P34-W	25	N		157						TB 7- 2	20	N		111						
B 17	40		P34-X	25	N		157						TB 7- 5	20	N		111						
B 18	41		P99-F*	25	N								TB 7- 10	20	N		111						
B 19	44			225		200	83			7				300		270	51	55	836				
B 19B	41		E 43	25	N								SHLD B 19	25	N								
B 19L			P38-E	25	N								TB 3- 3	20	N		111						
B 19R			P38-D	25	N								TB 3- 1	20	N		111						
B 20	41		E 18	25	N								TB18- 49	16	N		107						
B 21	41		E 18	25	N								TB18- 52	16	N		107						
B 22	41		E 18	25	N								TB18- 55	16	N		107						
B 23	41		E 18	25	N								TB18- 58	16	N		107						

1 THE STD CONDUCTOR TERMINATION FIGURES ARE PER
2 DIMENSIONS ARE IN INCHES AND TWO PLACE DECIMALS.

MANNED SPACECRAFT CENTER HOUSTON, TEXAS | SIZE A | 1900943
SCALE - NONE | REV LTR AR | SHEET 17 OF 188

MIL 2088 - 4-63 WIN

CONDUCTOR INDIVIDUAL LENGTH NUMBER	ITEM NO.	2	FROM CUT WIRE OR SHIELD STRIP WIRE OR JACKET CIRCUIT POINT	2	TIN	2	TERMINATION SPEC. 1 ITEM NO.					NO.	TO CUT WIRE OR SHIELD STRIP WIRE OR JACKET CIRCUIT POINT	2	TIN	2	TERMINATION SPEC. 1 ITEM NO.					NO.
B 24	41		E 18	25	N								TB18- 61	16	N		107						
B 25	41		E 18	25	N								TB18- 64	16	N		107						
B 26	41		E 18	25	N								TB18- 67	16	N		107						
B 27	41		E 18	25	N								TB18- 70	16	N		107						
B 28	41		E 18	25	N								TB18- 73	16	N		107						
B 29	41		E 60	25	N								TB18- 1	16	N		107						
B 30	41		E 60	25	N								TB18- 3	16	N		107						
B 31	41		E 60	25	N								TB18- 6	16	N		107						
B 32	41		E 60	25	N								TB18- 9	16	N		107						
B 33	41		E 60	25	N								TB18- 12	16	N		107						
B 34	40		P24-EE	25	N		157						TB 1- 6	20	N		111						
B 35	40		P24-FF	25	N		157						TB 1- 9	20	N		111						
B 36							120										120						
B 36K	41		P24-PP	25	N								TB 2- 2	20	N		111						
B 36L	41		P24-LL	25	N								TB 1- 3	20	N		111						
B 36N	41		P24-NN	25	N								TB 1- 2	20	N		111						
B 36Y	41		P24-MM	25	N								TB 1- 4	20	N		111						
B 37	41		E 8	25	N								TB21- 27	16	N		107						

1 THE STD CONDUCTOR TERMINATION FIGURES ARE PER
2 DIMENSIONS ARE IN INCHES AND TWO PLACE DECIMALS.

MANNED SPACECRAFT CENTER HOUSTON, TEXAS | SIZE A | 1900943
SCALE - NONE | REV LTR AR | SHEET 18 OF 188

MIL 2088 - 4-63 WIN

CONDUCTOR INDIVIDUAL LENGTH NUMBER	ITEM NO.	2	FROM CUT WIRE OR SHIELD STRIP WIRE OR JACKET CIRCUIT POINT	2	TIN	2	TERMINATION SPEC. 1 ITEM NO.					NO.	TO CUT WIRE OR SHIELD STRIP WIRE OR JACKET CIRCUIT POINT	2	TIN	2	TERMINATION SPEC. 1 ITEM NO.					NO.
B 38	41		E 8	25	N								TB21- 24	16	N		107						
B 39	41		E 8	25	N								TB21- 21	16	N		107						
B 40	41		E 8	25	N								TB21- 18	16	N		107						
B 41	41		E 8	25	N								TB21- 15	16	N		107						
B 42	41		E 8	25	N								TB21- 12	16	N		107						
B 43	41		E 8	25	N								TB21- 9	16	N		107						
B 44	41		E 8	25	N								TB21- 6	16	N		107						
B 45	41		E 8	25	N								TB21- 3	16	N		107						
B 46	41		TB22- 1	16	N		107						E 2	25	N								
B 47	41		E 2	25	N								TB22- 3	16	N		107						
B 48	41		E 2	25	N								TB22- 6	16	N		107						
B 49	41		E 2	25	N								TB22- 9	16	N		107						
B 50	41		E 2	25	N								TB22- 12	16	N		107						
B 51	41		E 2	25	N								TB22- 15	16	N		107						
B 52	41		E 2	25	N								TB22- 18	16	N		107						
B 53	41		E 2	25	N								TB22- 21	16	N		107						
B 54	41		E 2	25	N								TB22- 24	16	N		107						
B 55	41		E 9	25	N								TB20- 1	16	N		107						

1 THE STD CONDUCTOR TERMINATION FIGURES ARE PER
2 DIMENSIONS ARE IN INCHES AND TWO PLACE DECIMALS.

MANNED SPACECRAFT CENTER HOUSTON, TEXAS | SIZE A | 1900943
SCALE - NONE | REV LTR AR | SHEET 19 OF 188

MIL 2088 - 4-63 WIN

CONDUCTOR NUMBER	ITEM NO.		FROM CUT WIRE OR SHIELD STRIP WIRE OR JACKET CIRCUIT POINT			TERMINATION SPEC.						NO.	TO CUT WIRE OR SHIELD STRIP WIRE OR JACKET CIRCUIT POINT			TERMINATION SPEC.						NO.
B 56	41		E 9	25N									TB20- 3	16N		107						
B 57	41		E 9	25N									TB20- 6	16N		107						
B 58	41		TB 9- 7	16N		111							TB20- 9	16N		107						
B 59	41		E 9	25N									TB20- 12	16N		107						
B 60	41		E 9	25N									TB20- 15	16N		107						
B 61	41		E 9	25N									TB20- 18	16N		107						
B 62	41		E 9	25N									TB20- 21	16N		107						
B 63	41		E 17	25N									TB18- 15	16N		107						
B 64	41		E 17	25N									TB18- 18	16N		107						
B 65	41		E 17	25N									TB18- 21	16N		107						
B 66	41		E 17	25N									TB18- 24	16N		107						
B 67	41		E 17	25N									TB18- 27	16N		107						
B 68	41		E 17	25N									TB18- 30	16N		107						
B 69	41		E 17	25N									TB18- 33	16N		107						
B 70	41		E 17	25N									TB18- 36	16N		107						
B 71	41		E 17	25N									TB18- 39	16N		107						
B 72	44			225	200	83								300	270	51	55	836				
B 72B	41		E 52	25N									SHLD B 72	25N								

THE STD CONDUCTOR TERMINATION FIGURES ARE PER
DIMENSIONS ARE IN INCHES AND TWO PLACE DECIMALS.

MANNED SPACECRAFT CENTER HOUSTON, TEXAS | SIZE A | 1900943
SCALE-NONE | REV LTR AR | SHEET 20 OF 188

MIL 2069 - 4-63 WIR

CONDUCTOR NUMBER	ITEM NO.		FROM CUT WIRE OR SHIELD STRIP WIRE OR JACKET CIRCUIT POINT			TERMINATION SPEC.						NO.	TO CUT WIRE OR SHIELD STRIP WIRE OR JACKET CIRCUIT POINT			TERMINATION SPEC.						NO.
B 72L			P22-S	25N									TB 5- 7	20N		111						
B 72R			P22-R	25N									TB 4- 9	20N		111						
B 73	41		TB23- 21	20N		111							E 22	25N								
B 75	44			225	200	83			7					300	270	51	55	836				
B 75B	41		E 49	25N									SHLD B 75	25N								
B 75L			P 4-E	25N									TB 2- 1	20N		111						
B 75R			P 4-D	25N									TB 1- 1	20N		111						
B 76	44			225	200	83			7					300	270	51	55	836				
B 76B	41		E 45	25N									SHLD B 76	25N								
B 76L			P 2-E	25N									TB 6- 4	20N		111						
B 76R			P 2-D	25N									TB 6- 1	20N		111						
B 77	40		P64-S	25N		157							TB 7- 1	20N		111						
B 78	40		P64-T	25N		157							TB 7- 5	20N		111						
B 79	41		E 15	25N									TB19- 36	16N		107						
B 80	41		E 15	25N									TB19- 33	16N		107						
B 81	41		E 15	25N									TB19- 30	16N		107						
B 82	41		E 15	25N									TB19- 27	16N		107						
B 83	41		E 15	25N									TB19- 24	16N		107						

THE STD CONDUCTOR TERMINATION FIGURES ARE PER
DIMENSIONS ARE IN INCHES AND TWO PLACE DECIMALS.

MANNED SPACECRAFT CENTER HOUSTON, TEXAS | SIZE A | 1900943
SCALE-NONE | REV LTR AR | SHEET 21 OF 188

MIL 2069 - 4-63 WIR

CONDUCTOR NUMBER	ITEM NO.		FROM CUT WIRE OR SHIELD STRIP WIRE OR JACKET CIRCUIT POINT			TERMINATION SPEC.						NO.	TO CUT WIRE OR SHIELD STRIP WIRE OR JACKET CIRCUIT POINT			TERMINATION SPEC.						NO.
B 84	41		E 15	25N									TB19- 21	16N		107						
B 85	41		E 15	25N									TB19- 18	16N		107						
B 86	41		E 15	25N									TB19- 15	16N		107						
B 87	41		E 15	25N									TB19- 12	16N		107						
B 88	65			225	200	86	87	856						52	23	90	91	7				
B 88A	41		SHLD B 88	25N									TB17- 15CD	16N		107						
B 88E			TB17- 15AB	16N		107							P61-F1	11N		89						
B 88X			SHLD B 88										P61-F2									
B 89	65			225	200	86	87	856						52	23	90	91	7				
B 89A	41		SHLD B 89	25N									TB17- 14CD	16N		107						
B 89E			TB17- 14AB	16N		107							P60-A1	11N		89						
B 89X			SHLD B 89										P60-A2									
B 90	65			225	200	86	87	856						52	23	90	91	7				
B 90A	41		SHLD B 90	25N									TB17- 13CD	16N		107						
B 90E			TB17- 13AB	16N		107							P60-B1	11N		89						
B 90X			SHLD B 90										P60-B2									
B 91	65			225	200	86	87	856						52	23	90	91	7				
B 91A	41		SHLD B 91	25N									TB17- 12CD	16N		107						

THE STD CONDUCTOR TERMINATION FIGURES ARE PER
DIMENSIONS ARE IN INCHES AND TWO PLACE DECIMALS.

MANNED SPACECRAFT CENTER HOUSTON, TEXAS | SIZE A | 1900943
SCALE-NONE | REV LTR AR | SHEET 22 OF 188

MIL 2069 - 4-63 WIR

CONDUCTOR NUMBER	ITEM NO.		FROM CUT WIRE OR SHIELD STRIP WIRE OR JACKET CIRCUIT POINT			TERMINATION SPEC.						NO.	TO CUT WIRE OR SHIELD STRIP WIRE OR JACKET CIRCUIT POINT			TERMINATION SPEC.						NO.
B 91E			TB17- 12AB	16N		107							P60-C1	11N		89						
B 91X			SHLD B 91										P60-C2									
B 94	65			52	23	90	91	7						225	200	86	87	856				
B 94B	41		TB17- 17CD	16N		107							SHLD B 94	25N								
B 94E			P60-F1	11N		89							TB17- 17AB	16N		107						
B 94X			P60-F2										SHLD B 94									
B 95	42		P36-M	25N									P34-J*	25N								
B 96	42		P36-J	25N									P98-JJ	25N								
B 97	42		P36-K	25N									P34-K*	25N								
B 98	42		P36-P	25N									P98-L	25N								
B 99	42		P36-S	25N									TB19- 3AB	16N		107						
B 100	42		P36-U	25N									P98-V*	25N								
B 101	42		P36-W	25N									P34-H*	25N								
B 102	42		P36-X	25N									P98-W	25N								
B 103	45			225	200	84		7						225	200	50	54	845				
B 103B	41		E 39	25N									SHLD B 103	25N								
B 103L			P21-Y	25N									P23-E	25N								
B 103R			P21-X	25N									P23-D	25N								

THE STD CONDUCTOR TERMINATION FIGURES ARE PER
DIMENSIONS ARE IN INCHES AND TWO PLACE DECIMALS.

MANNED SPACECRAFT CENTER HOUSTON, TEXAS | SIZE A | 1900943
SCALE-NONE | REV LTR AR | SHEET 23 OF 188

MIL 2069 - 4-63 WIR

GMI WIRING HARNESS B AR 1900943

CONDUCTOR INDIVIDUAL LENGTH NUMBER	ITEM NO.		FROM CUT WIRE OR SHIELD STRIP WIRE OR JACKET CIRCUIT POINT						TERMINATION SPEC. ITEM NO.			NO.	TO CUT WIRE OR SHIELD STRIP WIRE OR JACKET CIRCUIT POINT						TERMINATION SPEC. ITEM NO.			NO.
B 104	45			225		200	84			7				225		200	50	54	845			
B 104B	41		E 39	25N									SHLD B 104	25N								
B 104L			P21-A*	25N									P23-C	25N								
B 104R			P21-Z	25N									P23-B	25N								
B 105	41		E 8	25N									TB21- 1	16N			107					
B 106	41		E 10	25N									TB20- 24	16N			107					
B 107	41		E 10	25N									TB20- 27	16N			107					
B 108	41		E 10	25N									TB20- 30	16N			107					
B 109	41		E 10	25N									TB20- 33	16N			107					
B 110	41		E 10	25N									TB20- 36	16N			107					
B 111	41		E 10	25N									TB20- 39	16N			107					
B 112	41		E 10	25N									TB20- 49	16N			107					
B 113	41		E 10	25N									TB20- 52	16N			107					
B 114	41		E 10	25N									TB20- 55	16N			107					
B 115	45			225		200	84			7				300		270	50	54	845			
B 115B	41		E 53	25N									SHLD B 115	25N								
B 115L			P21-C*	25N									TB 5- 10	20N			111					
B 115R			P21-B*	25N									TB 5- 5	20N			111					

1 THE STD CONDUCTOR TERMINATION FIGURES ARE PER
2 DIMENSIONS ARE IN INCHES AND TWO PLACE DECIMALS.

MANNED SPACECRAFT CENTER HOUSTON, TEXAS | SIZE A | 1900943

SCALE - NONE | REV LTR AR | SHEET 24 OF 188

MIL 2089 - 4-63 WIR

GMI WIRING HARNESS B AR 1900943

CONDUCTOR INDIVIDUAL LENGTH NUMBER	ITEM NO.		FROM CUT WIRE OR SHIELD STRIP WIRE OR JACKET CIRCUIT POINT						TERMINATION SPEC. ITEM NO.			NO.	TO CUT WIRE OR SHIELD STRIP WIRE OR JACKET CIRCUIT POINT						TERMINATION SPEC. ITEM NO.			NO.
B 116	45			225		200	84			7				300		270	50	54	845			
B 116B	41		E 53	25N									SHLD B 116	25N								
B 116L			P21-E*	25N									TB 5- 10	20N			111					
B 116R			P21-D*	25N									TB 5- 4	20N			111					
B 117	45			225		200	84			7				300		270	84			7		
B 117B	41		E 52	25N									SHLD B 117	25N								
B 117L			P22-P	25N									TB 5- 6	20N			111					
B 117R			P22-N	25N									TB 3- 9	20N			111					
B 118	40		P36-T	25N			157						TB 7- 3	20N			111					
B 119	42		P31-MM	25N									P99-C*	25N								
B 120	42		P31-NN	25N									P99-H*	25N								
B 121	42		P31-V*	25N									P99-D*	25N								
B 122	42		P31-W*	25N									P99-J*	25N								
B 123	42		P31-HH	25N									P99-E*	25N								
B 124	42		P31-JJ	25N									P99-I*	25N								
B 125	42		P31-BB	25N									P98-K	25N								
B 126	42		P31-X*	25N									P99-DD	25N								
B 127			DELETE																			

1 THE STD CONDUCTOR TERMINATION FIGURES ARE PER
2 DIMENSIONS ARE IN INCHES AND TWO PLACE DECIMALS.

MANNED SPACECRAFT CENTER HOUSTON, TEXAS | SIZE A | 1900943

SCALE - NONE | REV LTR AR | SHEET 25 OF 188

MIL 2089 - 4-63 WIR

GMI WIRING HARNESS B AR 1900943

CONDUCTOR INDIVIDUAL LENGTH NUMBER	ITEM NO.		FROM CUT WIRE OR SHIELD STRIP WIRE OR JACKET CIRCUIT POINT						TERMINATION SPEC. ITEM NO.			NO.	TO CUT WIRE OR SHIELD STRIP WIRE OR JACKET CIRCUIT POINT						TERMINATION SPEC. ITEM NO.			NO.
B 128	42		P31-Q*	25N									P98-B	25N								
B 129	42		P31-D	25N									P98-A	25N								
B 130	42		P31-J*	25N									P34-W*	25N								
B 131	42		P31-H*	25N									P34-P*	25N								
B 132	42		P31-G*	25N									P34-T*	25N								
B 133	42		P31-A	25N									P98-E*	25N								
B 134	42		P31-B*	25N									P98-F*	25N								
B 135	42		P31-A*	25N									P34-R*	25N								
B 136	42		P31-Z	25N									P34-U*	25N								
B 137	42		P31-Y	25N									P98-D*	25N								
B 138	42		P31-J	25N									P34-X*	25N								
B 139	42		P31-T	25N									P98-M	25N								
B 140	42		P31-S	25N									P98-Y	25N								
B 141	42		P31-L	25N									P98-X	25N								
B 142	41		P31-B	25N									P98-Z	25N								
B 143	42		P31-W	25N									P98-B*	25N								
B 144	42		P31-V	25N									P98-A*	25N								
B 145	42		P31-F	25N									P31-LL	25N								

1 THE STD CONDUCTOR TERMINATION FIGURES ARE PER
2 DIMENSIONS ARE IN INCHES AND TWO PLACE DECIMALS.

MANNED SPACECRAFT CENTER HOUSTON, TEXAS | SIZE A | 1900943

SCALE - NONE | REV LTR AR | SHEET 26 OF 188

MIL 2089 - 4-63 WIR

GMI WIRING HARNESS B AR 1900943

CONDUCTOR INDIVIDUAL LENGTH NUMBER	ITEM NO.		FROM CUT WIRE OR SHIELD STRIP WIRE OR JACKET CIRCUIT POINT						TERMINATION SPEC. ITEM NO.			NO.	TO CUT WIRE OR SHIELD STRIP WIRE OR JACKET CIRCUIT POINT						TERMINATION SPEC. ITEM NO.			NO.
B 147	42		P92-P	25N									P98-C	25N								
B 148	42		P96-U	25N									P34-F	25N								
B 149	42		P96-W	25N									P99-BB	25N								
B 150	42		P92-W	25N									P99-K*	25N								
B 152	41		E 63	20N			111						E 19	25N								
B 153	41		E 63	20N			111						E 20	25N								
B 156	40		P 5-V*	25N			166						TB14- 9	20N			111					
B 157	40		P 5-BB	25N			166						TB14- 7	20N			111					
B 158	44			225		200	83			7				300		270	51	55	836			
B 158B	41		E 47	25N									SHLD B 158	25N								
B 158L			P 8-E	25N									TB14- 4	20N			111					
B 158R			P 8-D	25N									TB14- 2	20N			111					
B 159	65			225		200	86	87	856					52		23	90	91		7		
B 159A	41		SHLD B 159	25N									TB17- 29CD	16N			107					
B 159E			TB17- 29AB	16N			107						P62-F1	11N			89					
B 159X			SHLD B 159										P62-F2									
B 160	65			225		200	86	87	856					52		23	90	91		7		
B 160A	41		SHLD B 160	25N									TB17- 28CD	16N			107					

1 THE STD CONDUCTOR TERMINATION FIGURES ARE PER
2 DIMENSIONS ARE IN INCHES AND TWO PLACE DECIMALS.

MANNED SPACECRAFT CENTER HOUSTON, TEXAS | SIZE A | 1900943

SCALE - NONE | REV LTR AR | SHEET 27 OF 188

MIL 2089 - 4-63 WIR

CONDUCTOR NUMBER	INDIVIDUAL LENGTH ITEM NO.	2	FROM CIRCUIT POINT	2	STRIP WIRE OR JACKET	TIN	2	CUT WIRE OR SHIELD	TERMINATION SPEC. 1	ITEM NO.	NO.	TO CIRCUIT POINT	2	STRIP WIRE OR JACKET	TIN	2	CUT WIRE OR SHIELD	TERMINATION SPEC. 1	ITEM NO.	NO.
B 160E			TB17- 28AB		16N			107				P61-A1		11N			89			
B 160X			SHLD B 160									P61-A2								
B 161	65				22S	20O	86	87	856					52	23	90	91	7		
B 161A	41		SHLD B 161		25N							TB17- 27CD		16N			107			
B 161E			TB17- 27AB		16N			107				P61-B1		11N			89			
B 161X			SHLD B 161									P61-B2								
B 162	65				22S	20O	86	87	856					52	23	90	91	7		
B 162A	41		SHLD B 162		25N							TB17- 26CD		16N			107			
B 162E			TB17- 26AB		16N			107				P61-C1		11N			89			
B 162X			SHLD B 162									P61-C2								
B 163	65				22S	20O	86	87	856					52	23	90	91	7		
B 163A	41		SHLD B 163		25N							TB17- 25CD		16N			107			
B 163E			TB17- 25AB		16N			107				P61-D1		11N			89			
B 163X			SHLD B 163									P61-D2								
B 164	65				22S	20O	86	87	856					52	23	90	91	7		
B 164A	41		SHLD B 164		25N							TB17- 4CD		16N			107			
B 164E			TB17- 4AB		16N			107				P61-E1		11N			89			
B 164X			SHLD B 164									P61-E2								

1 THE STD CONDUCTOR TERMINATION FIGURES ARE PER
2 DIMENSIONS ARE IN INCHES AND TWO PLACE DECIMALS.

MANNED SPACECRAFT CENTER HOUSTON, TEXAS | SIZE A | 1900943
SCALE - NONE | REV LTR AR | SHEET 28 OF 188

MIL 2089 - 4.65 WIR

CONDUCTOR NUMBER	INDIVIDUAL LENGTH ITEM NO.	2	FROM CIRCUIT POINT	2	STRIP WIRE OR JACKET	TIN	2	CUT WIRE OR SHIELD	TERMINATION SPEC. 1	ITEM NO.	NO.	TO CIRCUIT POINT	2	STRIP WIRE OR JACKET	TIN	2	CUT WIRE OR SHIELD	TERMINATION SPEC. 1	ITEM NO.	NO.
B 165	65				22S	20O	86	87	856					52	23	90	91	7		
B 165A			DELETED																	
B 165E			TB17- 21AB		16N			107				P61-J1		11N			89			
B 165X			SHLD B 165									P61-J2								
B 166	65				22S	20O	86	87	856					52	23	90	91	7		
B 166A			DELETED																	
B 166E			TB17- 23AB		16N			107				P60-G1		11N			89			
B 166X			SHLD B 166									P60-G2								
B 167	65				22S	20O	86	87	856					52	23	90	91	7		
B 167A			DELETED																	
B 167E			TB17- 22AB		16N			107				P60-H1		11N			89			
B 167X			SHLD B 167									P60-H2								
B 168	65				52	23	90	91	7					22S	20O	86	87	856		
B 168B	41		TB27- 23CD		16N			107				SHLD B 168		25N						
B 168E			P62-G1		11N			89				TB27- 23AB		16N			107			
B 168X			P62-G2									SHLD B 168								
B 169	44				22S	20O	83		7					30O	27O	51	55	856		
B 169B	41		E 45		25N							SHLD B 169		25N						

1 THE STD CONDUCTOR TERMINATION FIGURES ARE PER
2 DIMENSIONS ARE IN INCHES AND TWO PLACE DECIMALS.

MANNED SPACECRAFT CENTER HOUSTON, TEXAS | SIZE A | 1900943
SCALE - NONE | REV LTR AR | SHEET 29 OF 188

MIL 2089 - 4.65 WIR

CONDUCTOR NUMBER	INDIVIDUAL LENGTH ITEM NO.	2	FROM CIRCUIT POINT	2	STRIP WIRE OR JACKET	TIN	2	CUT WIRE OR SHIELD	TERMINATION SPEC. 1	ITEM NO.	NO.	TO CIRCUIT POINT	2	STRIP WIRE OR JACKET	TIN	2	CUT WIRE OR SHIELD	TERMINATION SPEC. 1	ITEM NO.	NO.
B 169L			P59-E		25N							TB 6- 5		20N			111			
B 169R			P59-D		25N							TB 6- 2		20N			111			
B 170	40		P37-GG		25N			157				TB 1- 10		20N			111			
B 171	42		P24-Q*		25N							P37-E*		25N						
B 172	42		P24-R*		25N							P11-H*		25N						
B 173	41		E 3		25N							TB22- 27		16N			107			
B 174	41		E 3		25N							TB22- 30		16N			107			
B 175	41		E 3		25N							TB22- 33		16N			107			
B 176	41		E 3		25N							TB22- 36		16N			107			
B 177	41		E 3		25N							TB22- 39		16N			107			
B 178	41		E 3		25N							TB22- 49		16N			107			
B 179	41		E 3		25N							TB22- 52		16N			107			
B 180	41		E 3		25N							TB22- 55		16N			107			
B 181	41		E 3		25N							TB22- 58		16N			107			
B 182	41		P99-S		25N							TB 8- 1		20N			111			
B 183	42		P24-L		25N							P11-J*		25N						
B 184	42		P24-N*		25N							P11-H*		25N						
B 185	42		P24-P*		25N							P11-K*		25N						

1 THE STD CONDUCTOR TERMINATION FIGURES ARE PER
2 DIMENSIONS ARE IN INCHES AND TWO PLACE DECIMALS.

MANNED SPACECRAFT CENTER HOUSTON, TEXAS | SIZE A | 1900943
SCALE - NONE | REV LTR AR | SHEET 30 OF 188

MIL 2089 - 4.65 WIR

CONDUCTOR NUMBER	INDIVIDUAL LENGTH ITEM NO.	2	FROM CIRCUIT POINT	2	STRIP WIRE OR JACKET	TIN	2	CUT WIRE OR SHIELD	TERMINATION SPEC. 1	ITEM NO.	NO.	TO CIRCUIT POINT	2	STRIP WIRE OR JACKET	TIN	2	CUT WIRE OR SHIELD	TERMINATION SPEC. 1	ITEM NO.	NO.
B 186	42		P24-S*		25N							P11-N*		25N						
B 187	42		P24-M*		25N							P11-I*		25N						
B 188	41		E 62		20N							E 14		25N						
B 190	41		E 7		25N							TB21- 61		16N			107			
B 191	41		E 7		25N							TB21- 58		16N			107			
B 192	41		E 7		25N							TB21- 55		16N			107			
B 193	41		E 7		25N							TB21- 52		16N			107			
B 194	41		E 7		25N							TB21- 49		16N			107			
B 195	41		E 7		25N							TB21- 39		16N			107			
B 196	41		E 7		25N							TB21- 36		16N			107			
B 197	41		E 7		25N							TB21- 33		16N			107			
B 198	41		E 7		25N							TB21- 30		16N			107			
B 199	65				22S	20O	86	87	856					50	31			7		
B 199A	41		SHLD B 199		25N							P65-H*		25N						
B 199E			P65-H		25N							P53-H		11Y						
B 199X			SHLD B 199									P53-L								
B 200	65				22S	20O	86	87	856					50	31			7		
B 200A			DELETE																	

1 THE STD CONDUCTOR TERMINATION FIGURES ARE PER
2 DIMENSIONS ARE IN INCHES AND TWO PLACE DECIMALS.

MANNED SPACECRAFT CENTER HOUSTON, TEXAS | SIZE A | 1900943
SCALE - NONE | REV LTR AR | SHEET 31 OF 188

MIL 2089 - 4.65 WIR

CONDUCTOR			FROM										TO										
INDIVIDUAL LENGTH			CUT WIRE OR SHIELD										CUT WIRE OR SHIELD										
			STRIP WIRE OR JACKET										STRIP WIRE OR JACKET										
NUMBER	ITEM NO.	2	CIRCUIT POINT	3	T I N	2	TERMINATION SPEC. 1	ITEM NO.				NO.	CIRCUIT POINT	3	T I N	2	TERMINATION SPEC. 1	ITEM NO.				NO.	
B 200E			P65-J	25	N								P51-H	11	Y								
B 200X			SHLD B 200										P51-L										
B 201	65			225		200	86	87	856					52		23	90	91		7			
B 201A	41		SHLD B 201	25	N								TB17- 39CD	16	N		107						
B 201E			TB17- 39AB	16	N		107						P61-G1	11	N		89						
B 201X			SHLD B 201										P61-G2										
B 202	65			225		200	86	87	856					52		23	90	91		7			
B 202A	41		SHLD B 202	25	N								TB17- 38CD	16	N		107						
B 202E			TB17- 38AB	16	N		107						P61-H1	11	N		89						
B 202X			SHLD B 202										P61-H2										
B 203	65			225		200	86	87	856					52		23	90	91		7			
B 203A	41		SHLD B 203	25	N								TB17- 31CD	16	N		107						
B 203E			TB17- 31AB	16	N		107						P60-J1	11	N		89						
B 203X			SHLD B 203										P60-J2										
B 204	65			225		200	86	87	856					52		23	90	91		7			
B 204A	41		SHLD B 204	25	N								TB17- 30CD	16	N		107						
B 204E			TB17- 30AB	16	N		107						P62-E1	11	N		89						
B 204X			SHLD B 204										P62-E2										

1 THE STD CONDUCTOR TERMINATION FIGURES ARE PER
2 DIMENSIONS ARE IN INCHES AND TWO PLACE DECIMALS.

MANNED SPACECRAFT CENTER HOUSTON, TEXAS | SIZE A | 1900943

SCALE - NONE | REV LTR AR | SHEET 32 OF 188

MIL 2089 - 4-63 WIN

CONDUCTOR			FROM										TO										
INDIVIDUAL LENGTH			CUT WIRE OR SHIELD										CUT WIRE OR SHIELD										
			STRIP WIRE OR JACKET										STRIP WIRE OR JACKET										
NUMBER	ITEM NO.	2	CIRCUIT POINT	3	T I N	2	TERMINATION SPEC. 1	ITEM NO.				NO.	CIRCUIT POINT	3	T I N	2	TERMINATION SPEC 1	ITEM NO.				NO.	
B 205	45			225		200	84		7					300		270	50	54	846				
B 205B	41		E 50	25	N								SHLD B 205	25	N								
B 205L			P24-HH	25	N								TB 2- 1	20	N		111						
B 205R			P24-GG	25	N								TB 2- 4	20	N		111						
B 206	44			225		200	84		7					225		200	50	54	84	5			
B 206B	41		E 55	25	N								SHLD B 206	25	N								
B 206L			P33-E	25	N		157						TB 7- 4	20	N		111						
B 206R			P33-D	25	N		157						TB 7- 1	20	N		111						
B 207	41		P82-S*	25	N								TB12- 7	20	N		111						
B 208	41		P82-T*	25	N								TB12- 9	20	N		111						
B 209	02						120										120						
B 209L			P22-K	25	N		157						TB 3- 7	20	N		111						
B 209R			P22-J	25	N		157						TB 3- 5	20	N		111						
B 210	41		E 13	25	N								TB19- 94	16	N		107						
B 211	41		E 13	25	N								TB19- 91	16	N		107						
B 212	41		E 13	25	N								TB19- 88	16	N		107						
B 213	41		E 13	25	N								TB19- 85	16	N		107						
B 214	41		E 13	25	N								TB19- 82	16	N		107						

1 THE STD CONDUCTOR TERMINATION FIGURES ARE PER
2 DIMENSIONS ARE IN INCHES AND TWO PLACE DECIMALS.

MANNED SPACECRAFT CENTER HOUSTON, TEXAS | SIZE A | 1900943

SCALE - NONE | REV LTR AR | SHEET 33 OF 188

MIL 2089 - 4-63 WIN

CONDUCTOR			FROM										TO										
INDIVIDUAL LENGTH			CUT WIRE OR SHIELD										CUT WIRE OR SHIELD										
			STRIP WIRE OR JACKET										STRIP WIRE OR JACKET										
NUMBER	ITEM NO.	2	CIRCUIT POINT	3	T I N	2	TERMINATION SPEC. 1	ITEM NO.				NO.	CIRCUIT POINT	3	T I N	2	TERMINATION SPEC 1	ITEM NO.				NO.	
B 215	41		E 13	25	N								TB19- 80	16	N		107						
B 216	41		E 13	25	N								TB19- 78	16	N		107						
B 217	41		E 13	25	N								TB19- 75	16	N		107						
B 218	41		E 13	25	N								TB19- 72	16	N		107						
B 219	41		P91-Z	25	N								TB23- 13	20	N		111						
B 220	41		E 11	25	N								TB20- 58	16	N		107						
B 221	41		E 11	25	N								TB20- 61	16	N		107						
B 222	41		E 11	25	N								TB20- 64	16	N		107						
B 223	41		E 11	25	N								TB20- 67	16	N		107						
B 224	41		E 11	25	N								TB20- 69	16	N		107						
B 225	41		E 11	25	N								TB20- 72	16	N		107						
B 226	41		E 11	25	N								TB20- 75	16	N		107						
B 227	41		E 11	25	N								TB20- 77	16	N		107						
B 228	41		E 11	25	N								TB20- 80	16	N		107						
B 229	65			225		200	86	87	856					52		23	90	91		7			
B 229A	41		SHLD B 229	25	N								TB17- 43CD	16	N		107						
B 229E			TB17- 43AB	16	N		107						P62-K1	11	N		89						
B 229X			SHLD B 229										P62-K2										

1 THE STD CONDUCTOR TERMINATION FIGURES ARE PER
2 DIMENSIONS ARE IN INCHES AND TWO PLACE DECIMALS.

MANNED SPACECRAFT CENTER HOUSTON, TEXAS | SIZE A | 1900943

SCALE - NONE | REV LTR AR | SHEET 34 OF 188

MIL 2089 - 4-63 WIN

CONDUCTOR			FROM										TO										
INDIVIDUAL LENGTH			CUT WIRE OR SHIELD										CUT WIRE OR SHIELD										
			STRIP WIRE OR JACKET										STRIP WIRE OR JACKET										
NUMBER	ITEM NO.	2	CIRCUIT POINT	3	T I N	2	TERMINATION SPEC. 1	ITEM NO.				NO.	CIRCUIT POINT	3	T I N	2	TERMINATION SPEC 1	ITEM NO.				NO.	
B 230	65			225		200	86	87	856					52		23	90	91		7			
B 230A	41		SHLD B 230	25	N								TB17- 42CD	16	N		107						
B 230E			TB17- 42AB	16	N		107						P62-B1	11	N		89						
B 230X			SHLD B 230										P62-B2										
B 231	65			225		200	86	87	856					52		23	90	91		7			
B 231A	41		SHLD B 231	25	N								TB17- 41CD	16	N		107						
B 231E			TB17- 41AB	16	N		107						P62-C1	11	N		89						
B 231X			SHLD B 231										P62-C2										
B 232	65			225		200	86	87	856					52		23	90	91		7			
B 232A	41		SHLD B 232	25	N								TB17- 40CD	16	N		107						
B 232E			TB17- 40AB	16	N		107						P62-D1	11	N		89						
B 232X			SHLD B 232										P62-D2										
B 233	41		E 62	20	N		111						E 12	25	N								
B 234	41		E 63	20	N		111						E 13	25	N								
B 237	41		E 19	25	N								TB18- 75	16	N		107						
B 238	41		E 19	25	N								TB18- 78	16	N		107						
B 239	41		E 19	25	N								TB18- 81	16	N		107						
B 240	41		E 19	25	N								TB18- 84	16	N		107						

1 THE STD CONDUCTOR TERMINATION FIGURES ARE PER
2 DIMENSIONS ARE IN INCHES AND TWO PLACE DECIMALS.

MANNED SPACECRAFT CENTER HOUSTON, TEXAS | SIZE A | 1900943

SCALE - NONE | REV LTR AR | SHEET 35 OF 188

MIL 2089 - 4-63 WIN

GMI WIRING HARNESS B AR 1900943

CONDUCTOR INDIVIDUAL LENGTH NUMBER	ITEM NO.	2	FROM CUT WIRE OR SHIELD STRIP WIRE OR JACKET CIRCUIT POINT	2	T I N	2	TERMINATION SPEC. 1 ITEM NO.	NO.	TO CUT WIRE OR SHIELD STRIP WIRE OR JACKET CIRCUIT POINT	2	T I N	2	TERMINATION SPEC. 1 ITEM NO.	NO.
B 241	41		E 19	25N					TB18- 87	16N			107	
B 242	41		E 19	25N					TB18- 90	16N			107	
B 243	41		E 19	25N					TB18- 93	16N			107	
B 244	41		E 19	25N					TB18- 96	16N			107	
B 245	41		E 19	25N					TB18- 99	16N			107	
B 246	41		E 4	25N					TB22- 61	16N			107	
B 247	41		E 4	25N					TB22- 64	16N			107	
B 248	41		E 4	25N					TB22- 67	16N			107	
B 249	41		E 4	25N					TB22- 69	16N			107	
B 250	41		E 4	25N					TB22- 72	16N			107	
B 251	41		E 4	25N					TB22- 77	16N			107	
B 252	41		E 4	25N					TB22- 74	16N			107	
B 253	41		E 4	25N					TB22- 82	16N			107	
B 254	41		E 4	25N					TB22- 85	16N			107	
B 255			DELETE											
B 256	42		P31-P*	25N					P36-L	25N				
B 257	42		P31-GG	25N					P36-V	25N				
B 258	46			225		200	48 52 845			225		200	85	

1 THE STD CONDUCTOR TERMINATION FIGURES ARE PER
2 DIMENSIONS ARE IN INCHES AND TWO PLACE DECIMALS.

MANNED SPACECRAFT CENTER HOUSTON, TEXAS | SIZE A | 1900943
SCALE-NONE | REV LTR AR | SHEET 36 OF 188

MIL 2089 - 4-63 WIR

GMI WIRING HARNESS B AR 1900943

CONDUCTOR INDIVIDUAL LENGTH NUMBER	ITEM NO.	2	FROM CUT WIRE OR SHIELD STRIP WIRE OR JACKET CIRCUIT POINT	2	T I N	2	TERMINATION SPEC. 1 ITEM NO.	NO.	TO CUT WIRE OR SHIELD STRIP WIRE OR JACKET CIRCUIT POINT	2	T I N	2	TERMINATION SPEC. 1 ITEM NO.	NO.
B 258A	41		SHLD B 258	25N					E 34	25N				
B 258L			P32-P	25N					P36-V*	25N				
B 258R			P32-R	25N					P36-S*	25N				
B 259	46			225		200	48 52 845			225		200	85	
B 259A	41		SHLD B 259	25N					E 35	25N				
B 259L			P32-DD	25N					P36-U*	25N				
B 259R			P32-EE	25N					P36-R*	25N				
B 260	46			225		200	48 52 845			225		200	85	
B 260A	41		SHLD B 260	25N					E 34	25N				
B 260L			P32-V*	25N					P36-T*	25N				
B 260R			P32-U*	25N					P36-P*	25N				
B 261	46			225		200	48 52 845			225		200	85	7
B 261A	41		SHLD B 261	25N					E 34	25N				
B 261L			P32-K	25N					P35-K	25N				
B 261R			P32-L	25N					P35-L	25N				
B 263	41		E 21	25N					TB17- 74	16N			107	
B 264	41		E 21	25N					TB17- 71	16N			107	
B 265	41		E 21	25N					TB17- 68	16N			107	

1 THE STD CONDUCTOR TERMINATION FIGURES ARE PER
2 DIMENSIONS ARE IN INCHES AND TWO PLACE DECIMALS.

MANNED SPACECRAFT CENTER HOUSTON, TEXAS | SIZE A | 1900943
SCALE-NONE | REV LTR AR | SHEET 37 OF 188

MIL 2089 - 4-63 WIR

GMI WIRING HARNESS B AR 1900943

CONDUCTOR INDIVIDUAL LENGTH NUMBER	ITEM NO.	2	FROM CUT WIRE OR SHIELD STRIP WIRE OR JACKET CIRCUIT POINT	2	T I N	2	TERMINATION SPEC. 1 ITEM NO.	NO.	TO CUT WIRE OR SHIELD STRIP WIRE OR JACKET CIRCUIT POINT	2	T I N	2	TERMINATION SPEC. 1 ITEM NO.	NO.
B 266	41		E 21	25N					TB17- 65	16N			107	
B 267	41		E 21	25N					TB17- 62	16N			107	
B 268	41		E 21	25N					TB17- 59	16N			107	
B 269	41		E 21	25N					TB17- 56	16N			107	
B 270	41		E 21	25N					TB17- 53	16N			107	
B 271	41		E 21	25N					TB17- 50	16N			107	
B 272	42		P31-FF	25N					P96-Z	25N				
B 273	42		P31-F*	25N					P92-I*	25N				
B 274	42		P31-E*	25N					P92-H*	25N				
B 275	42		P31-D*	25N					P9_-G*	25N				
B 276	42		P31-DD	25N					P92-D*	25N				
B 277	42		P31-KK	25N					P92-E*	25N				
B 278	42		P31-E	25N					P92-C*	25N				
B 279	42		P31-PP	25N					P92-J*	25N				
B 280	41		E 6	25N					TB21- 88	16N			107	
B 281	41		E 6	25N					TB21- 84	16N			107	
B 282	41		E 6	25N					TB21- 81	16N			107	
B 283	41		E 6	25N					TB21- 78	16N			107	

1 THE STD CONDUCTOR TERMINATION FIGURES ARE PER
2 DIMENSIONS ARE IN INCHES AND TWO PLACE DECIMALS.

MANNED SPACECRAFT CENTER HOUSTON, TEXAS | SIZE A | 1900943
SCALE-NONE | REV LTR AR | SHEET 38 OF 188

MIL 2089 - 4-63 WIR

GMI WIRING HARNESS B AR 1900943

CONDUCTOR INDIVIDUAL LENGTH NUMBER	ITEM NO.	2	FROM CUT WIRE OR SHIELD STRIP WIRE OR JACKET CIRCUIT POINT	2	T I N	2	TERMINATION SPEC. 1 ITEM NO.	NO.	TO CUT WIRE OR SHIELD STRIP WIRE OR JACKET CIRCUIT POINT	2	T I N	2	TERMINATION SPEC. 1 ITEM NO.	NO.
B 284	41		E 6	25N					TB21- 76	16N			107	
B 285	41		E 6	25N					TB21- 73	16N			107	
B 286	41		E 6	25N					TB21- 70	16N			107	
B 287	41		E 6	25N					TB21- 67	16N			107	
B 288	41		E 6	25N					TB21- 64	16N			107	
B 289	41		E 62	20N		111			E 11	25N				
B 290	41		E 63	20N		111			E 21	25N				
B 293	46			225		200	48 52 845			225		200	48 52 845	
B 293B	41		E 27	25N					SHLD B 293	25N				
B 293L			P20-M*	25N					J16-W*	25N				
B 293R			P20-N*	25N					J16-V*	25N				
B 294	46			225		200	48 52 845			225		200	85	7
B 294A	41		SHLD B 294	25N					E 28	25N				
B 294L			P20-J*	25N					J16-U*	25N				
B 294R			P20-K*	25N					J16-T*	25N				
B 295	46			225		200	48 52 845			225		200	85	7
B 295A	41		SHLD B 295	25N					E 28	25N				
B 295L			P20-H*	25N					J16-S*	25N				

1 THE STD CONDUCTOR TERMINATION FIGURES ARE PER
2 DIMENSIONS ARE IN INCHES AND TWO PLACE DECIMALS.

MANNED SPACECRAFT CENTER HOUSTON, TEXAS | SIZE A | 1900943
SCALE-NONE | REV LTR AR | SHEET 39 OF 188

MIL 2089 - 4-63 WIR

CONDUCTOR INDIVIDUAL LENGTH NUMBER	ITEM NO.	2	FROM CUT WIRE OR SHIELD STRIP WIRE OR JACKET CIRCUIT POINT	3	TYPE	2	TERMINATION SPEC. 1 ITEM NO.	NO.	TO CUT WIRE OR SHIELD STRIP WIRE OR JACKET CIRCUIT POINT	3	TYPE	2	TERMINATION SPEC. 1 ITEM NO.	NO.
B 295R			P20-I*	25N					J16-R*	25N				
B 296	46			225	200	48	52 845			225	200	85	7	
B 296A	41		SHLD B 296	25N					E 28	25N				
B 296L			P20-F*	25N					J16-Q*	25N				
B 296R			P20-G*	25N					J16-P*	25N				
B 297	46			225	200	48	52 845			225	200	85	7	
B 297A	41		SHLD B 297	25N					E 28	25N				
B 297L			P20-D*	25N					J16-N*	25N				
B 297R			P20-E*	25N					J16-M*	25N				
B 298	46			225	200	48	52 845			225	200	85	7	
B 298A	41		SHLD B 298	25N					E 28	25N				
B 298L			P20-B*	25N					J16-K*	25N				
B 298R			P20-C*	25N					J16-J*	25N				
B 299	41		P92-N*	25N					TB23- 14	20N		111		
B 300	41		E 61	20N		111			E 6	25N				
B 301	41		E 63	20N		111			E 18	25N				
B 303	41		E 63	20N		111			E 17	25N				
B 305	41		E 12	25N					TB19-100	16N		107		

1 THE STD CONDUCTOR TERMINATION FIGURES ARE PER
2 DIMENSIONS ARE IN INCHES AND TWO PLACE DECIMALS.

MANNED SPACECRAFT CENTER HOUSTON, TEXAS | SIZE A | 1900943

SCALE-NONE | REV LTR AR | SHEET 40 OF 188

MIL 2049 - 2.93 WIN

CONDUCTOR INDIVIDUAL LENGTH NUMBER	ITEM NO.	2	FROM CUT WIRE OR SHIELD STRIP WIRE OR JACKET CIRCUIT POINT	3	TYPE	2	TERMINATION SPEC. 1 ITEM NO.	NO.	TO CUT WIRE OR SHIELD STRIP WIRE OR JACKET CIRCUIT POINT	3	TYPE	2	TERMINATION SPEC. 1 ITEM NO.	NO.
B 306	41		E 12	25N					TB19- 97	16N		107		
B 307	40		P91-A	25N					TB25- 7	20N		111		
B 308	41		E 5	25N					TB22- 88	16N		107		
B 309	41		E 5	25N					TB22- 91	16N		107		
B 310	41		E 5	25N					TB22- 94	16N		107		
B 311	41		E 5	25N					TB22- 98	16N		107		
B 312	41		E 5	25N					TB22-100	16N		107		
B 313	47			225	200	85				300	270	48	52 846	
B 313B	41		TB20- 18	16N		107			SHLD B 313	25N				
B 313L			P36-K*	25N					TB20- 19CD	16N		107		
B 313R			P36-J*	25N					TB20- 19AB	16N		107		
B 314	41		E 62	20N		111			E 15	25N				
B 316	46			225	200	85	7			400	370	48	52 846	
B 316B	41		TB18- 9	16N		107			SHLD B 316	25N				
B 316L			P82-J	25N					TB18- 8CD	16N		107		
B 316R			P82-H	25N					TB18- 8AB	16N		107		
B 317	46			225	200	85	7			400	370	48	52 846	
B 317B	41		TB19- 30	16N		107			SHLD B 317	25N				

1 THE STD CONDUCTOR TERMINATION FIGURES ARE PER
2 DIMENSIONS ARE IN INCHES AND TWO PLACE DECIMALS.

MANNED SPACECRAFT CENTER HOUSTON, TEXAS | SIZE A | 1900943

SCALE-NONE | REV LTR AR | SHEET 41 OF 188

MIL 2049 - 2.93 WIN

CONDUCTOR INDIVIDUAL LENGTH NUMBER	ITEM NO.	2	FROM CUT WIRE OR SHIELD STRIP WIRE OR JACKET CIRCUIT POINT	3	TYPE	2	TERMINATION SPEC. 1 ITEM NO.	NO.	TO CUT WIRE OR SHIELD STRIP WIRE OR JACKET CIRCUIT POINT	3	TYPE	2	TERMINATION SPEC. 1 ITEM NO.	NO.
B 317L			P82-L	25N					TB19- 29CD	16N		107		
B 317R			P82-K	25N					TB19- 29AB	16N		107		
B 318	46			225	200	85	7			400	370	48	52 846	
B 318B	41		TB19- 24	16N		107			SHLD B 318	25N				
B 318L			P82-C*	25N					TB19- 25CD	16N		107		
B 318R			P82-B*	25N					TB19- 25AB	16N		107		
B 319	46			225	200	85	7			400	370	48	52 846	
B 319B	41		TB19- 24	16N		107			SHLD B 319	25N				
B 319L			P82-E*	25N					TB19- 23CD	16N		107		
B 319R			P82-D*	25N					TB19- 23AB	16N		107		
B 320	46			225	200	85	7			400	370	48	52 846	
B 320B	41		TB19- 27	16N		107			SHLD B 320	25N				
B 320L			P82-G*	25N					TB19- 26CD	16N		107		
B 320R			P82-F*	25N					TB19- 26AB	16N		107		
B 321	41		E 20	25N					TB17-100	16N		107		
B 322	41		E 20	25N					TB17- 97	16N		107		
B 323	41		E 20	25N					TB17- 94	16N		107		
B 324	41		E 20	25N					TB17- 91	16N		107		

1 THE STD CONDUCTOR TERMINATION FIGURES ARE PER
2 DIMENSIONS ARE IN INCHES AND TWO PLACE DECIMALS.

MANNED SPACECRAFT CENTER HOUSTON, TEXAS | SIZE A | 1900943

SCALE-NONE | REV LTR AR | SHEET 42 OF 188

MIL 2049 - 2.93 WIN

CONDUCTOR INDIVIDUAL LENGTH NUMBER	ITEM NO.	2	FROM CUT WIRE OR SHIELD STRIP WIRE OR JACKET CIRCUIT POINT	3	TYPE	2	TERMINATION SPEC. 1 ITEM NO.	NO.	TO CUT WIRE OR SHIELD STRIP WIRE OR JACKET CIRCUIT POINT	3	TYPE	2	TERMINATION SPEC. 1 ITEM NO.	NO.
B 325	41		E 20	25N					TB17- 88	16N		107		
B 326	41		E 20	25N					TB17- 86	16N		107		
B 327	41		E 20	25N					TB17- 83	16N		107		
B 328	41		E 20	25N					TB17- 80	16N		107		
B 329	41		E 20	25N					TB17- 77	16N		107		
B 330	42		P21-R*	25N					J18-FF	25N				
B 331	42		P21-M*	25N					J18-GG	25N				
B 332	41		E 14	25N					TB19- 69	16N		107		
B 333	41		E 14	25N					TB19- 66	16N		107		
B 334	41		E 14	25N					TB19- 63	16N		107		
B 335	41		E 14	25N					TB19- 61	16N		107		
B 336	41		E 14	25N					TB19- 58	16N		107		
B 337	41		E 14	25N					TB19- 55	16N		107		
B 338	41		E 14	25N					TB19- 52	16N		107		
B 339	41		E 14	25N					TB19- 49	16N		107		
B 340	41		TB 9- 7	16N		111			TB19- 39	16N		107		
B 341	41		E 12	25N					TB20- 83	16N		107		
B 342	41		E 12	25N					TB20- 85	16N		107		

1 THE STD CONDUCTOR TERMINATION FIGURES ARE PER
2 DIMENSIONS ARE IN INCHES AND TWO PLACE DECIMALS.

MANNED SPACECRAFT CENTER HOUSTON, TEXAS | SIZE A | 1900943

SCALE-NONE | REV LTR AR | SHEET 43 OF 188

MIL 2049 - 2.93 WIN

CONDUCTOR INDIVIDUAL LENGTH NUMBER	ITEM NO.	2	FROM CUT WIRE OR SHIELD STRIP WIRE OR JACKET CIRCUIT POINT	2	T I N	2	TERMINATION SPEC. 1 ITEM NO.	NO.	TO CUT WIRE OR SHIELD STRIP WIRE OR JACKET CIRCUIT POINT	2	T I N	2	TERMINATION SPEC. 1 ITEM NO.	NO.
B 343	41		E 12	25	N				TB20- 88	16	N		107	
B 344	41		E 12	25	N				TB20- 91	16	N		107	
B 345	41		E 12	25	N				TB20- 94	16	N		107	
B 346	41		E 12	25	N				TB20- 97	16	N		107	
B 347	41		E 12	25	N				TB20-100	16	N		107	
B 348	41		P82-A	25	N				TB25- 1	20	N		111	
B 349	41		E 61	20	N		111		E 4	25	N			
B 350	41		E 61	20	N		111		E 7	25	N			
B 351	41		E 62	20	N		111		E 10	25	N			
B 354	41		E 5	25	N				TB21-100	16	N		107	
B 355	41		E 5	25	N				TB21- 97	16	N		107	
B 356	41		E 5	25	N				TB21- 94	16	N		107	
B 357	41		E 5	25	N				TB21- 91	16	N		107	
B 358	98			225		200	103 53 84	5		225		200	84	
B 358A	41		SHLD B 358	25	N				E 30	25	N			
B 358L			P21-NN	25	N				J24-Y	25	N			
B 358R			P21-LL	25	N				J24-X	25	N			
B 358Y			P21-MM	25	N				J24-Z	25	N			

1 THE STD CONDUCTOR TERMINATION FIGURES ARE PER
2 DIMENSIONS ARE IN INCHES AND TWO PLACE DECIMALS.

MANNED SPACECRAFT CENTER HOUSTON, TEXAS | SIZE A | 1900943
SCALE-NONE | REV LTR AR | SHEET 44 OF 188

MIL 2089 - 4-63 WIN

CONDUCTOR INDIVIDUAL LENGTH NUMBER	ITEM NO.	2	FROM CUT WIRE OR SHIELD STRIP WIRE OR JACKET CIRCUIT POINT	2	T I N	2	TERMINATION SPEC. 1 ITEM NO.	NO.	TO CUT WIRE OR SHIELD STRIP WIRE OR JACKET CIRCUIT POINT	2	T I N	2	TERMINATION SPEC. 1 ITEM NO.	NO.
B 359	08						120						120	
B 359L			P21-X*	25	N				J24-DD	25	N			
B 359R			P21-W*	25	N				J24-CC	25	N			
B 360	45			225		200	84			225		200	84	
B 360B	41		E 26	25	N				SHLD B 360	25	N			
B 360L			P21-BB	25	N				J24-FF	25	N			
B 360R			P21-AA	25	N				J24-EE	25	N			
B 361	98			225		200	103 53 84	5		225		200	84	
B 361A	41		SHLD B 361	25	N				E 30	25	N			
B 361L			P21-T*	25	N				J24-J	25	N			
B 361R			P21-U*	25	N				J24-G	25	N			
B 361Y			P21-S*	25	N				J24-H	25	N			
B 362	65			225		200	86 87 85	6		225		200	86 87 85	6
B 362A	41		SHLD B 362	25	N				P21-DD	25	N			
B 362B	41		J24-M	25	N				SHLD B 362	25	N			
B 362E			P21-CC	25	N				J24-M	25	N			
B 363	46			225		200	85	7		400		370	48 52 84	6
B 363B	41		TB19- 30	16	N		107		SHLD B 363	25	N			

1 THE STD CONDUCTOR TERMINATION FIGURES ARE PER
2 DIMENSIONS ARE IN INCHES AND TWO PLACE DECIMALS.

MANNED SPACECRAFT CENTER HOUSTON, TEXAS | SIZE A | 1900943
SCALE-NONE | REV LTR AR | SHEET 45 OF 188

MIL 2089 - 4-63 WIN

CONDUCTOR INDIVIDUAL LENGTH NUMBER	ITEM NO.	2	FROM CUT WIRE OR SHIELD STRIP WIRE OR JACKET CIRCUIT POINT	2	T I N	2	TERMINATION SPEC. 1 ITEM NO.	NO.	TO CUT WIRE OR SHIELD STRIP WIRE OR JACKET CIRCUIT POINT	2	T I N	2	TERMINATION SPEC. 1 ITEM NO.	NO.
B 363L			P82-J*	25	N				TB19- 31CD	16	N		107	
B 363R			P82-H*	25	N				TB19- 31AB	16	N		107	
B 364	46			225		200	85	7		400		370	48 52 84	6
B 364B	41		TB19- 27	16	N		107		SHLD B 364	25	N			
B 364L			P82-X*	25	N				TB19- 28CD	16	N		107	
B 364R			P82-W*	25	N				TB19- 28AB	16	N		107	
B 365	16		P63-A	25	N				TB25- 4	20	N		111	
B 366	16		TB20- 11AB	25	N		108		TB 9- 1	20	N		111	
B 367	178		E 1	40	N		179		TB 9- 5	40	N		179	
B 368	41		E 62	25	N		111		E 5	25	N			
B 370	65			52		23	90 91	7		225		200	86 87 85	6
B 370B	41		TB18- 76	16	N		107		SHLD B 370	25	N			
B 370E			P66-B1	11	N		89		TB18- 77	16	N		107	
B 370X			P66-B2						SHLD B 370					
B 371	65			52		23	90 91	7		225		200	86 87 85	6
B 371B	41		TB18- 72CD	16	N		107		SHLD B 371	25	N			
B 371E			P66-D1	11	N		89		TB18- 72AB					
B 371X			P66-D2						SHLD B 371					

1 THE STD CONDUCTOR TERMINATION FIGURES ARE PER
2 DIMENSIONS ARE IN INCHES AND TWO PLACE DECIMALS.

MANNED SPACECRAFT CENTER HOUSTON, TEXAS | SIZE A | 1900943
SCALE-NONE | REV LTR AR | SHEET 46 OF 188

MIL 2089 - 4-63 WIN

CONDUCTOR INDIVIDUAL LENGTH NUMBER	ITEM NO.	2	FROM CUT WIRE OR SHIELD STRIP WIRE OR JACKET CIRCUIT POINT	2	T I N	2	TERMINATION SPEC. 1 ITEM NO.	NO.	TO CUT WIRE OR SHIELD STRIP WIRE OR JACKET CIRCUIT POINT	2	T I N	2	TERMINATION SPEC. 1 ITEM NO.	NO.
B 372	41		P35-A	25	N				TB25- 8	20	N		111	
B 373	41		E 62	25	N				E 9	25	N			
B 374	41		E 62	25	N				E 16	25	N			
B 375			DELETE											
B 377	42		P35-X	25	N				TB19- 98AB	16	N		107	
B 378	41		P99-P*	25	N				TB23- 14	20	N		111	
B 379	16		J 3-MM	25	N				TB13- 5	20	N		111	
B 380	45			225		200	50 54 84	5		225		200	84	
B 380A	41		SHLD B 380	25	N				E 30	25	N			
B 380L			P21-HH	25	N				J25-N*	25	N			
B 380R			P21-GG	25	N				J25-M*	25	N			
B 381	45			225		200	84			225		200	84	7
B 381B	41		E 25	25	N				SHLD B 381	25	N			
B 381L			P21-KK	25	N				J25-K*	25	N			
B 381R			P21-JJ	25	N				J25-J*	25	N			
B 382	44			225		200	83	7		300		270	51 55 83	5
B 382B	41		E 44	25	N				SHLD B 382	25	N			
B 382L			P42-E	25	N				TB10- 6	20	N		111	

1 THE STD CONDUCTOR TERMINATION FIGURES ARE PER
2 DIMENSIONS ARE IN INCHES AND TWO PLACE DECIMALS.

MANNED SPACECRAFT CENTER HOUSTON, TEXAS | SIZE A | 1900943
SCALE-NONE | REV LTR AR | SHEET 47 OF 188

MIL 2089 - 4-63 WIN

CONDUCTOR NUMBER	INDIVIDUAL LENGTH ITEM NO.	2		FROM CUT WIRE OR SHIELD STRIP WIRE OR JACKET CIRCUIT POINT	2	T I N	2	TERMINATION SPEC. 1 ITEM NO.	NO.		TO CUT WIRE OR SHIELD STRIP WIRE OR JACKET CIRCUIT POINT	2	T I N	2	TERMINATION SPEC 1 ITEM NO.	NO.
B 382R				P42-D	25N						TB10- 3	20N			111	
B 383	44				225		200	89	7			300		270	51 55 856	
B 383B	41			E 44	25N						SHLD B 383	25N				
B 383L				P44-E	25N						TB10- 5	20N			111	
B 383R				P44-D	25N						TB10- 3	20N			111	
B 384	65				52		23	90 91	7			225		200	86 87 856	
B 384B	41			TB17- 49CD	16N			107			SHLD B 384	25N				
B 384E				P67-A1	11N			89			TB17- 49AB	16N			107	
B 384X				P67-A2							SHLD B 384					
B 385	65				52		23	90 91	7			225		200	86 87 856	
B 385B	41			TB17- 48CD	16N			107			SHLD B 385	25N				
B 385E				P69-B1	11N			89			TB17- 48AB	16N			107	
B 385X				P69-B2							SHLD B 385					
B 386	65				52		23	90 91	7			225		200	86 87 856	
B 386B	41			TB17- 47CD	16N			107			SHLD B 386	25N				
B 386E				P67-B1	11N			89			TB17- 47AB	16N			107	
B 386X				P67-B2							SHLD B 386					
B 387	65				52		23	90 91	7			225		200	86 87 856	

1 THE STD CONDUCTOR TERMINATION FIGURES ARE PER
2 DIMENSIONS ARE IN INCHES AND TWO PLACE DECIMALS.

MANNED SPACECRAFT CENTER HOUSTON, TEXAS | SIZE A | 1900943
SCALE - NONE | REV LTR AR | SHEET 48 OF 188

MIL 2089 - 4-63 WIN

CONDUCTOR NUMBER	INDIVIDUAL LENGTH ITEM NO.	2		FROM CUT WIRE OR SHIELD STRIP WIRE OR JACKET CIRCUIT POINT	2	T I N	2	TERMINATION SPEC. 1 ITEM NO.	NO.		TO CUT WIRE OR SHIELD STRIP WIRE OR JACKET CIRCUIT POINT	2	T I N	2	TERMINATION SPEC 1 ITEM NO.	NO.
B 387B	41			TB17- 46CD	16N			107			SHLD B 387	25N				
B 387E				P69-C1	11N			89			TB17- 46AB	16N			107	
B 387X				P69-C2							SHLD B 387					
B 388	65				52		23	90 91	7			225		200	86 87 856	
B 388B	41			TB17- 45CD	16N			107			SHLD B 388	25N				
B 388E				P67-C1	11N			89			TB17- 45AB	16N			107	
B 388X				P67-C2							SHLD B 388					
B 389	65				52		23	90 91	7			225		200	86 87 856	
B 389B	41			TB17- 44CD	16N			107			SHLD B 389	25N				
B 389E				P69-D1	11N			89			TB17- 44AB	16N			107	
B 389X				P69-D2							SHLD B 389					
B 390	41			E 61	25N						E 3	25N				
B 392	41			P82-Q*	25N						TB23- 18	20N			111	
B 393	40			J20-N	25N			157			TB 3- 6	20N			111	
B 394	40			J20-D	25N			157			TB 3- 8	20N			111	
B 395	41			E 61	25N						E 8	25N				
B 397	42			P34-N	25N						P37-EE	25N				
B 398	65				52		23	90 91	7			225		200	86 87 856	

1 THE STD CONDUCTOR TERMINATION FIGURES ARE PER
2 DIMENSIONS ARE IN INCHES AND TWO PLACE DECIMALS.

MANNED SPACECRAFT CENTER HOUSTON, TEXAS | SIZE A | 1900943
SCALE - NONE | REV LTR AR | SHEET 49 OF 188

MIL 2089 - 4-63 WIN

CONDUCTOR NUMBER	INDIVIDUAL LENGTH ITEM NO.	2		FROM CUT WIRE OR SHIELD STRIP WIRE OR JACKET CIRCUIT POINT	2	T I N	2	TERMINATION SPEC. 1 ITEM NO.	NO.		TO CUT WIRE OR SHIELD STRIP WIRE OR JACKET CIRCUIT POINT	2	T I N	2	TERMINATION SPEC 1 ITEM NO.	NO.
B 398B	41			TB17- 37CD	16N			107			SHLD B 398	25N				
B 398E				P67-G1	11N			89			TB17- 37AB	16N			107	
B 398X				P67-G2							SHLD B 398					
B 399	65				52		23	90 91	7			225		200	86 87 856	
B 399B	41			TB17- 36CD	16N			107			SHLD B 399	25N				
B 399E				P69-H1	11N			89			TB17- 36AB	16N			107	
B 399X				P69-H2							SHLD B 399					
B 400	65				52		23	90 91	7			225		200	86 87 856	
B 400B	41			TB17- 35CD	16N			107			SHLD B 400	25N				
B 400E				P67-H1	11N			89			TB17- 35AB	16N			107	
B 400X				P67-H2							SHLD B 400					
B 401	65				52		23	90 91	7			225		200	86 87 856	
B 401B	41			TB17- 34CD	16N			107			SHLD B 401	25N				
B 401E				P69-J1	11N			89			TB17- 34AB	16N			107	
B 401X				P69-J2							SHLD B 401					
B 402	65				52		23	90 91	7			225		200	86 87 856	
B 402B	41			TB17- 33CD	16N			107			SHLD B 402	25N				
B 402E				P67-J1	11N			89			TB17- 33AB	16N			107	

1 THE STD CONDUCTOR TERMINATION FIGURES ARE PER
2 DIMENSIONS ARE IN INCHES AND TWO PLACE DECIMALS.

MANNED SPACECRAFT CENTER HOUSTON, TEXAS | SIZE A | 1900943
SCALE - NONE | REV LTR AR | SHEET 50 OF 188

MIL 2089 - 4-63 WIN

CONDUCTOR NUMBER	INDIVIDUAL LENGTH ITEM NO.	2		FROM CUT WIRE OR SHIELD STRIP WIRE OR JACKET CIRCUIT POINT	2	T I N	2	TERMINATION SPEC. 1 ITEM NO.	NO.		TO CUT WIRE OR SHIELD STRIP WIRE OR JACKET CIRCUIT POINT	2	T I N	2	TERMINATION SPEC 1 ITEM NO.	NO.
B 402X				P67-J2							SHLD B 402					
B 403	65				52		23	90 91	7			225		200	86 87 856	
B 403B	41			TB17- 32CD	16N			107			SHLD B 403	25N				
B 403E				P70-A1	11N			89			TB17- 32AB	16N			107	
B 403X				P70-A2							SHLD B 403					
B 404	16			P33-B	25N						TB24- 3	40N			111	
B 405	16			P33-X	25N						TB24- 6	40N			111	
B 406	42			P92-C	25N						P82-U*	25N				
B 407	41			TB20- 37AB	16N			107			TB24- 9	20N			111	
B 408	46				225		200	85				400		370	48 52 846	
B 408B	41			TB19- 78	16N			107			SHLD B 408	25N				
B 408L				P36-D	25N						TB19- 77CD	16N			107	
B 408R				P36-E	25N						TB19- 77AB	16N			107	
B 409	46				225		200	85	7			400		370	48 52 846	
B 409B	41			TB21- 76	16N			107			SHLD B 409	25N				
B 409L				P91-B*	25N						TB21- 74	16N			107	
B 409R				P91-B	25N						TB21- 75	16N			107	
B 410	41			P71-A	25N						TB25- 7	20N			111	

1 THE STD CONDUCTOR TERMINATION FIGURES ARE PER
2 DIMENSIONS ARE IN INCHES AND TWO PLACE DECIMALS.

MANNED SPACECRAFT CENTER HOUSTON, TEXAS | SIZE A | 1900943
SCALE - NONE | REV LTR AR | SHEET 51 OF 188

MIL 2089 - 4-63 WIN

GMI WIRING HARNESS B AR 1900943

CONDUCTOR INDIVIDUAL LENGTH NUMBER	ITEM NO. (2)	FROM CUT WIRE OR SHIELD STRIP WIRE OR JACKET CIRCUIT POINT (2)	TYPE (2)	TERMINATION SPEC. (1) ITEM NO.	NO.	TO CUT WIRE OR SHIELD STRIP WIRE OR JACKET CIRCUIT POINT (2)	TYPE (2)	TERMINATION SPEC. (1) ITEM NO.	NO.
B 411	42	P35-G*	25N			TB20- 81AB	16N	107	
B 412	65		52	23 90 91 7			225	200 86 87 856	
B 412B	41	TB20- 78	16N	107		SHLD B 412	25N		
B 412E		P66-A1	11N	89		TB20- 79	16N	107	
B 412X		P66-A2				SHLD B 412			
B 413	65		52	23 90 91 7			225	200 86 87 856	
B 413B	41	TB20- 70	16N	107		SHLD B 413	25N		
B 413E		P66-E1	11N	89		TB20- 71	16N	107	
B 413X		P66-E2				SHLD B 413			
B 414	41	P34-A	25N			TB25- 8	20N	111	
B 415	65		52	23 90 91 7			225	200 86 87 856	
B 415B	41	P16-V	25N			SHLD B 415	25N		
B 415E		P67-D1	11N	89		P16-U	25N		
B 415X		P67-D2				SHLD B 415			
B 416	65		52	23 90 91 7			225	200 86 87 856	
B 416B	41	P16-X	25N			SHLD B 416	25N		
B 416E		P69-E1	11N	89		P16-W	25N		
B 416X		P69-E2				SHLD B 416			

(1) THE STD CONDUCTOR TERMINATION FIGURES ARE PER
(2) DIMENSIONS ARE IN INCHES AND TWO PLACE DECIMALS.

MANNED SPACECRAFT CENTER HOUSTON, TEXAS | SIZE A | 1900943

SCALE - NONE | REV LTR AR | SHEET 52 OF 188

MIL 2049 - 4-63 WIR

GMI WIRING HARNESS B AR 1900943

CONDUCTOR INDIVIDUAL LENGTH NUMBER	ITEM NO. (2)	FROM CUT WIRE OR SHIELD STRIP WIRE OR JACKET CIRCUIT POINT (2)	TYPE (2)	TERMINATION SPEC. (1) ITEM NO.	NO.	TO CUT WIRE OR SHIELD STRIP WIRE OR JACKET CIRCUIT POINT (2)	TYPE (2)	TERMINATION SPEC. (1) ITEM NO.	NO.
B 417	65		52	23 90 91 7			225	200 86 87 856	
B 417B	41	P16-Z	25N			SHLD B 417	25N		
B 417E		P67-E1	11N	89		P16-Y	25N		
B 417X		P67-E2				SHLD B 417			
B 418	65		52	23 90 91 7			225	200 86 87 856	
B 418B	41	P16-B*	25N			SHLD B 418	25N		
B 418E		P69-F1	11N	89		P16-A*	25N		
B 418X		P69-F2				SHLD B 418			
B 419	65		52	23 90 91 7			225	200 86 87 856	
B 419B	41	P16-N*	25N			SHLD B 419	25N		
B 419E		P67-F1	11N	89		P16-M*	25N		
B 419X		P67-F2				SHLD B 419			
B 420	65		52	23 90 91 7			225	200 86 87 856	
B 420B	41	P17-G	25N			SHLD B 420	25N		
B 420E		P69-G1	11N	89		P17-F	25N		
B 420X		P69-G2				SHLD B 420			
B 421	65		52	23 90 91 7			225	200 86 87 856	
B 421B	41	P16-G	25N			SHLD B 421	25N		

(1) THE STD CONDUCTOR TERMINATION FIGURES ARE PER
(2) DIMENSIONS ARE IN INCHES AND TWO PLACE DECIMALS.

MANNED SPACECRAFT CENTER HOUSTON, TEXAS | SIZE A | 1900943

SCALE - NONE | REV LTR AR | SHEET 53 OF 188

MIL 2049 - 4-63 WIR

GMI WIRING HARNESS B AR 1900943

CONDUCTOR INDIVIDUAL LENGTH NUMBER	ITEM NO. (2)	FROM CUT WIRE OR SHIELD STRIP WIRE OR JACKET CIRCUIT POINT (2)	TYPE (2)	TERMINATION SPEC. (1) ITEM NO.	NO.	TO CUT WIRE OR SHIELD STRIP WIRE OR JACKET CIRCUIT POINT (2)	TYPE (2)	TERMINATION SPEC. (1) ITEM NO.	NO.
B 421E		P68-A1	11N	89		P16-F	25N		
B 421X		P68-A2				SHLD B 421			
B 422	65		52	23 90 91 7			225	200 86 87 856	
B 422B	41	P16-J	25N			SHLD B 422	25N		
B 422E		P70-B1	11N	89		P16-H	25N		
B 422X		P70-B2				SHLD B 422			
B 423	65		52	23 90 91 7			225	200 86 87 856	
B 423B	41	P16-L	25N			SHLD B 423	25N		
B 423E		P68-B1	11N	89		P16-K	25N		
B 423X		P68-B2				SHLD B 423			
B 424	42	P64-EE	25N			P16-Y*	25N		
B 425	65		52	23 90 91 7			225	200 86 87 856	
B 425B	41	P16-S	25N			SHLD B 425	25N		
B 425E		P66-J1	11N	89		P16-T	25N		
B 425X		P66-J2				SHLD B 425			
B 426	41	P64-BB	25N			P16-AA	25N		
B 427	65		52	23 90 91 7			225	200 86 87 856	
B 427B	41	P16-N	25N			SHLD B 427	25N		

(1) THE STD CONDUCTOR TERMINATION FIGURES ARE PER
(2) DIMENSIONS ARE IN INCHES AND TWO PLACE DECIMALS.

MANNED SPACECRAFT CENTER HOUSTON, TEXAS | SIZE A | 1900943

SCALE - NONE | REV LTR AR | SHEET 54 OF 188

MIL 2049 - 4-63 WIR

GMI WIRING HARNESS B AR 1900943

CONDUCTOR INDIVIDUAL LENGTH NUMBER	ITEM NO. (2)	FROM CUT WIRE OR SHIELD STRIP WIRE OR JACKET CIRCUIT POINT (2)	TYPE (2)	TERMINATION SPEC. (1) ITEM NO.	NO.	TO CUT WIRE OR SHIELD STRIP WIRE OR JACKET CIRCUIT POINT (2)	TYPE (2)	TERMINATION SPEC. (1) ITEM NO.	NO.
B 427E		P70-C1	11N	89		P16-M	25N		
B 427X		P70-C2				SHLD B 427			
B 428	65		52	23 90 91 7			225	200 86 87 856	
B 428B	41	P16-R	25N			SHLD B 428	25N		
B 428E		P68-C1	11N	89		P16-P	25N		
B 428X		P68-C2				SHLD B 428			
B 429	65		52	23 90 91 7			225	200 86 87 856	
B 429B	41	P17-K*	25N			SHLD B 429	25N		
B 429E		P70-D1	11N	89		P17-J*	25N		
B 429X		P70-D2				SHLD B 429			
B 430	65		52	23 90 91 7			225	200 86 87 856	
B 430B	41	P16-D*	25N			SHLD B 430	25N		
B 430E		P68-G1	11N	89		P16-C*	25N		
B 430X		P68-G2				SHLD B 430			
B 431	65		52	23 90 91 7			225	200 86 87 856	
B 431B	41	P16-G*	25N			SHLD B 431	25N		
B 431E		P70-H1	11N	89		P16-F*	25N		
B 431X		P70-H2				SHLD B 431			

(1) THE STD CONDUCTOR TERMINATION FIGURES ARE PER
(2) DIMENSIONS ARE IN INCHES AND TWO PLACE DECIMALS.

MANNED SPACECRAFT CENTER HOUSTON, TEXAS | SIZE A | 1900943

SCALE - NONE | REV LTR AR | SHEET 55 OF 188

MIL 2049 - 4-63 WIR

CONDUCTOR NUMBER	INDIVIDUAL LENGTH ITEM NO.	2	FROM CUT WIRE OR SHIELD STRIP WIRE OR JACKET CIRCUIT POINT	2	T I N	2	TERMINATION SPEC. 1 ITEM NO.	NO.	TO CUT WIRE OR SHIELD STRIP WIRE OR JACKET CIRCUIT POINT	2	T I N	2	TERMINATION SPEC. 1 ITEM NO.	NO.
B 432	65			52	23	90 91	7			225	200	86 87 856		
B 432B	41		P16-C	25N					SHLD B 432	25N				
B 432E			P68-H1	11N		89			P16-B	25N				
B 432X			P68-H2						SHLD B 432					
B 433	65			52	23	90 91	7			225	200	86 87 856		
B 433B	41		P16-E	25N					SHLD B 433	25N				
B 433E			P70-J1	11N		89			P16-D	25N				
B 433X			P70-J2						SHLD B 433					
B 434	41		E 61	25N					E 2	25N				
B 436			DELETED											
B 436A			DELETED											
B 436L			DELETED											
B 436R			DELETED											
B 437			DELETED											
B 437A			DELETED											
B 437L			DELETED											
B 437R			DELETED											
B 438			DELETED											

1 THE STD CONDUCTOR TERMINATION FIGURES ARE PER
2 DIMENSIONS ARE IN INCHES AND TWO PLACE DECIMALS.

MANNED SPACECRAFT CENTER HOUSTON, TEXAS | SIZE A | 1900943
SCALE - NONE | REV LTR AR | SHEET 56 OF 188

MIL 2049 - 4-63 WIN

CONDUCTOR NUMBER	INDIVIDUAL LENGTH ITEM NO.	2	FROM CUT WIRE OR SHIELD STRIP WIRE OR JACKET CIRCUIT POINT	2	T I N	2	TERMINATION SPEC. 1 ITEM NO.	NO.	TO CUT WIRE OR SHIELD STRIP WIRE OR JACKET CIRCUIT POINT	2	T I N	2	TERMINATION SPEC. 1 ITEM NO.	NO.
B 438A			DELETED											
B 438L			DELETED											
B 438R			DELETED											
B 439	46			225	200	85	7			400	370	48 52 846		
B 439B	41		TB21- 70	16N	107				SHLD B 439	25N				
B 439L			P91-F*	25N					TB21- 69CD	16N	107			
B 439R			P91-F	25N					TB21- 69AB	16N	107			
B 440	46			225	200	85	7			400	370	48 52 846		
B 440B	41		TB18- 99	16N	107				SHLD B 440	25N				
B 440L			P91-D*	25N					TB18- 98CD	16N	107			
B 440R			P91-D	25N					TB18- 98AB	16N	107			
B 441	46			225	200	48 52 845				225	200	85	7	
B 441A	41		SHLD B 441	25N					E 33	25N				
B 441L			P91-C*	25N					P 1-C	25N				
B 441R			P91-C	25N					P 1-F	25N				
B 442	46			225	200	48 52 845				225	200	85	7	
B 442A	41		SHLD B 442	25N					E 33	25N				
B 442L			P91-E*	25N					P 1-R	25N				

1 THE STD CONDUCTOR TERMINATION FIGURES ARE PER
2 DIMENSIONS ARE IN INCHES AND TWO PLACE DECIMALS.

MANNED SPACECRAFT CENTER HOUSTON, TEXAS | SIZE A | 1900943
SCALE - NONE | REV LTR AR | SHEET 57 OF 188

MIL 2049 - 4-63 WIN

CONDUCTOR NUMBER	INDIVIDUAL LENGTH ITEM NO.	2	FROM CUT WIRE OR SHIELD STRIP WIRE OR JACKET CIRCUIT POINT	2	T I N	2	TERMINATION SPEC. 1 ITEM NO.	NO.	TO CUT WIRE OR SHIELD STRIP WIRE OR JACKET CIRCUIT POINT	2	T I N	2	TERMINATION SPEC. 1 ITEM NO.	NO.
B 442R			P91-E	25N					P 1-G	25N				
B 443	46			225	200	48 52 845				225	200	85	7	
B 443A	41		SHLD B 443	25N					E 33	25N				
B 443L			P91-G*	25N					P 1-U	25N				
B 443R			P91-G	25N					P 1-K	25N				
B 444	46			225	200	85	7			400	370	48 52 845		
B 444B	41		TB18- 78	16N	107				SHLD B 444	25N				
B 444L			P82-D	25N					TB18- 76	16N	107			
B 444R			P82-E	25N					TB18- 77	16N	107			
B 445	45			225	200	84				225	200	50 54 84		
B 445A	41		SHLD B445	25N					E32	25N				
B 445L			P35-B*	25N					J22-Q*	25N				
B 445R			P35-C*	25N					J22-P*	25N				
B 446	45			225	200	84				400	370	50 54 846		
B 446B	41		TB20- 75	16N	107				SHLD B 446	25N				
B 446L			P35-Y	25N					TB20- 73CD	16N	108			
B 446R			P35-Z	25N					TB20- 74AB	16N	108			
B 447	40		P59-A	25N					TB25- 4	20N	111			

1 THE STD CONDUCTOR TERMINATION FIGURES ARE PER
2 DIMENSIONS ARE IN INCHES AND TWO PLACE DECIMALS.

MANNED SPACECRAFT CENTER HOUSTON, TEXAS | SIZE A | 1900943
SCALE - NONE | REV LTR AR | SHEET 58 OF 188

MIL 2049 - 4-63 WIN

CONDUCTOR NUMBER	INDIVIDUAL LENGTH ITEM NO.	2	FROM CUT WIRE OR SHIELD STRIP WIRE OR JACKET CIRCUIT POINT	2	T I N	2	TERMINATION SPEC. 1 ITEM NO.	NO.	TO CUT WIRE OR SHIELD STRIP WIRE OR JACKET CIRCUIT POINT	2	T I N	2	TERMINATION SPEC. 1 ITEM N.	NO.
B 448	42		P41-S*	25N					J23-A	25N				
B 449	42		P41-T*	25N					J23-B	25N				
B 450	42		P41-U*	25N					J23-C	25N				
B 451	42		P41-V*	25N					J23-D	25N				
B 452	42		P41-W*	25N					J23-E	25N				
B 453	42		P41-X*	25N					J23-F	25N				
B 454	42		P41-Y*	25N					J23-G	25N				
B 455	42		P41-Z*	25N					J23-H	25N				
B 456	42		P41-AA	25N					J23-J	25N				
B 457	42		P41-BB	25N					J23-V	25N				
B 458	42		P41-CC	25N					J23-W	25N				
B 459	42		P41-DD	25N					J23-X	25N				
B 460	42		P41-EE	25N					J23-Y	25N				
B 461	42		P41-FF	25N					J23-Z	25N				
B 462	42		P41-GG	25N					J23-A*	25N				
B 463	42		P41-HH	25N					J23-B*	25N				
B 464	42		P41-JJ	25N					J23-C*	25N				
B 465	42		P41-KK	25N					J23-D*	25N				

1 THE STD CONDUCTOR TERMINATION FIGURES ARE PER
2 DIMENSIONS ARE IN INCHES AND TWO PLACE DECIMALS.

MANNED SPACECRAFT CENTER HOUSTON, TEXAS | SIZE A | 1900943
SCALE - NONE | REV LTR AR | SHEET 59 OF 188

MIL 2049 - 4-63 WIN

GMI WIRING HARNESS B AR 1900943

CONDUCTOR INDIVIDUAL LENGTH NUMBER	ITEM NO.	2	FROM CUT WIRE OR SHIELD STRIP WIRE OR JACKET CIRCUIT POINT	2	TIN	2	TERMINATION SPEC. 1 ITEM NO.						NO.	TO CUT WIRE OR SHIELD STRIP WIRE OR JACKET CIRCUIT POINT	2	TIN	2	TERMINATION SPEC 1 ITEM NO.						NO.
B 466	42		P41-LL	25	N									J23-E*	25	N									
B 467	42		P41-MM	25	N									J23-Q*	25	N									
B 468	42		P41-NN	25	N									J23-R*	25	N									
B 469	42		P41-PP	25	N									J23-S*	25	N									
B 470	41		P71-S*	25	N									TB 9- 4	20	N			111						
B 471	65			52		23	90	91		7					225		200	86	87	856					
B 471B	41		TB20- 81CD	16	N		107							SHLD B 471	25	N									
B 471E			P66-C1	11	N		89							TB20- 68AB	16	N			107						
B 471X			P66-C2											SHLD B 471											
B 472	16		TB23- 12	20	N		111							P31-M	25	N									
B 473	46			225		200	85								400		370	85							
B 473B	41		TB19- 52	16	N									SHLD B 473	25	N									
B 473L			P35-E*	25	N									TB19- 51CD	16	N			107						
B 473R			P35-F*	25	N									TB19- 51AB	16	N			107						
B 474	46			225		200	85			7					225		200	48	52	845					
B 474B	41		E 40	25	N									SHLD B 474	25	N									
B 474L			P10-PP	25	N									J 3-B	25	N									
B 474R			P10-AA	25	N									J 3-A	25	N									

1 THE STD CONDUCTOR TERMINATION FIGURES ARE PER
2 DIMENSIONS ARE IN INCHES AND TWO PLACE DECIMALS.

MANNED SPACECRAFT CENTER HOUSTON, TEXAS | SIZE A | 1900943
SCALE - NONE | REV LTR AR | SHEET 60 OF 188

MIL 2089 - 4-63 WIR

GMI WIRING HARNESS B AR 1900943

CONDUCTOR INDIVIDUAL LENGTH NUMBER	ITEM NO.	2	FROM CUT WIRE OR SHIELD STRIP WIRE OR JACKET CIRCUIT POINT	2	TIN	2	TERMINATION SPEC. 1 ITEM NO.						NO.	TO CUT WIRE OR SHIELD STRIP WIRE OR JACKET CIRCUIT POINT	2	TIN	2	TERMINATION SPEC 1 ITEM NO.						NO.
B 475	46			225		200	85			7					225		200	48	52	845					
B 475B	41		E 40	25	N									SHLD B 475	25	N									
B 475L			P10-A*	25	N									J 3-E	25	N									
B 475R			P10-A	25	N									J 3-D	25	N									
B 476	46			225		200	85			7					225		200	48	52	845					
B 476B	41		E 40	25	N									SHLD B 476	25	N									
B 476L			P85-V*	25	N									J 3-H	25	N									
B 476R			P85-U*	25	N									J 3-G	25	N									
B 477	46			225		200	85			7					225		200	48	52	845					
B 477B	41		E 40	25	N									SHLD B 477	25	N									
B 477L			P84-V*	25	N									J 3-L	25	N									
B 477R			P84-U*	25	N									J 3-K	25	N									
B 478	46			225		200	85			7					225		200	48	52	845					
B 478B	41		E 40	25	N									SHLD B 478	25	N									
B 478L			P 9-V*	25	N									J 3-P	25	N									
B 478R			P 9-U*	25	N									J 3-N	25	N									
B 479	46			225		200	85			7					225		200	48	52	845					
B 479B	41		E 40	25	N									SHLD B 479	25	N									

1 THE STD CONDUCTOR TERMINATION FIGURES ARE PER
2 DIMENSIONS ARE IN INCHES AND TWO PLACE DECIMALS.

MANNED SPACECRAFT CENTER HOUSTON, TEXAS | SIZE A | 1900943
SCALE - NONE | REV LTR AR | SHEET 61 OF 188

MIL 2089 - 4-63 WIR

GMI WIRING HARNESS B AR 1900943

CONDUCTOR INDIVIDUAL LENGTH NUMBER	ITEM NO.	2	FROM CUT WIRE OR SHIELD STRIP WIRE OR JACKET CIRCUIT POINT	2	TIN	2	TERMINATION SPEC. 1 ITEM NO.						NO.	TO CUT WIRE OR SHIELD STRIP WIRE OR JACKET CIRCUIT POINT	2	TIN	2	TERMINATION SPEC 1 ITEM NO.						NO.
B 479L			P86-V*	25	N									J 3-T	25	N									
B 479R			P86-U*	25	N									J 3-S	25	N									
B 480	46			225		200	85			7					225		200	48	52	845					
B 480B	41		E 40	25	N									SHLD B 480	25	N									
B 480L			P83-Z*	25	N									J 3-Q*	25	N									
B 480R			P83-Y*	25	N									J 3-P*	25	N									
B 481	46			225		200	85			7					225		200	48	52	845					
B 481B	41		E 40	25	N									SHLD B 481	25	N									
B 481L			P83-V*	25	N									J 3-T*	25	N									
B 481R			P83-U*	25	N									J 3-S*	25	N									
B 482	41		P64-FF	25	N									TB17- 2AB	16	N			107						
B 484	46			225		200	85			7					400		370	48	52	846					
B 484B	41		TB20- 21	16	N		107							SHLD B 484	25	N									
B 484L			P19-C	25	N									TB20- 20CD	16	N			107						
B 484R			P19-B	25	N									TB20- 20AB	16	N			107						
B 485	42		P92-B	25	N									TB21- 77AB	16	N			107						
B 486	46			225		200	85			7					400		370	48	52	846					
B 486B	41		TB17- 50	16	N		107							SHLD B 486	25	N									

1 THE STD CONDUCTOR TERMINATION FIGURES ARE PER
2 DIMENSIONS ARE IN INCHES AND TWO PLACE DECIMALS.

MANNED SPACECRAFT CENTER HOUSTON, TEXAS | SIZE A | 1900943
SCALE - NONE | REV LTR AR | SHEET 62 OF 188

MIL 2089 - 4-63 WIR

GMI WIRING HARNESS B AR 1900943

CONDUCTOR INDIVIDUAL LENGTH NUMBER	ITEM NO.	2	FROM CUT WIRE OR SHIELD STRIP WIRE OR JACKET CIRCUIT POINT	2	TIN	2	TERMINATION SPEC. 1 ITEM NO.						NO.	TO CUT WIRE OR SHIELD STRIP WIRE OR JACKET CIRCUIT POINT	2	TIN	2	TERMINATION SPEC 1 ITEM NO.						NO.
B 486L			P10-LL	25	N									TB17- 51CD	16	N			107						
B 486R			P10-KK	25	N									TB17- 51AB	16	N			107						
B 487	46			225		200	85			7					400		370	48	52	846					
B 487B	41		TB17- 53	16	N		107							SHLD B 487	25	N									
B 487L			P10-MM	25	N									TB17- 52CD	16	N			107						
B 487R			P10-MM	25	N									TB17- 52AB	16	N			107						
B 488	46			225		200	85			7					400		370	48	52	846					
B 488B	41		TB17- 56	16	N		107							SHLD B 488	25	N									
B 488L			P84-LL	25	N									TB17- 55CD	16	N			107						
B 488R			P84-KK	25	N									TB17- 55AB	16	N			107						
B 489	46			225		200	85			7					400		370	48	52	846					
B 489B	41		TB17- 56	16	N		107							SHLD B 489	25	N									
B 489L			P 9-LL	25	N									TB17- 57CD	16	N			107						
B 489R			P 9-KK	25	N									TB17- 57AB	16	N			107						
B 490	46			225		200	85			7					400		370	48	52	846					
B 490B	41		TB17- 56	16	N		107							SHLD B 490	25	N									
B 490L			P86-LL	25	N									TB17- 58CD	16	N			107						
B 490R			P86-KK	25	N									TB17- 58AB	16	N			107						

1 THE STD CONDUCTOR TERMINATION FIGURES ARE PER
2 DIMENSIONS ARE IN INCHES AND TWO PLACE DECIMALS.

MANNED SPACECRAFT CENTER HOUSTON, TEXAS | SIZE A | 1900943
SCALE - NONE | REV LTR AR | SHEET 63 OF 188

MIL 2089 - 4-63 WIR

CONDUCTOR NUMBER	ITEM NO.		FROM: CUT WIRE OR SHIELD STRIP WIRE OR JACKET CIRCUIT POINT		TYPE		TERMINATION SPEC. ITEM NO.		NO.	TO: CUT WIRE OR SHIELD STRIP WIRE OR JACKET CIRCUIT POINT		TYPE		TERMINATION SPEC. ITEM NO.		NO.
B 491			DELETE													
B 491A			DELETE													
B 491B			DELETE													
B 491E			DELETE													
B 492	41		P71-T*		25N					TB23- 17		20N		111		
B 493	42		P36-PP		25N					TB21- 72		16N		107		
B 496	16		P43-R		25N					TB24- 5		20N		111		
B 499	16		P43-S		25N					TB24- 8		20N		111		
B 500	16		P45-R		25N					TB24- 2		20N		111		
B 501	16		P45-S		25N					TB24- 5		20N		111		
B 502	44			225		200	85		7		400		370	85		7
B 502B	41		E 30		25N					SHLD B 502		25N				
B 502L			P91-U*		25N					P21-B		16N		107		
B 502R			P91-U		25N					P21-A		16N		107		
B 504	42		P99-T		25N					P24-V		25N				
B 505	42		P99-N		25N					P24-Y		25N				
B 506	42		P34-D*		25N					P24-A*		25N				
B 507			DELETE													

1 THE STD CONDUCTOR TERMINATION FIGURES ARE PER
2 DIMENSIONS ARE IN INCHES AND TWO PLACE DECIMALS.

MANNED SPACECRAFT CENTER HOUSTON, TEXAS | SIZE A | 1900943
SCALE - NONE | REV LTR AR | SHEET 64 OF 188

MIL 2089 - 4-63 WIR

CONDUCTOR NUMBER	ITEM NO.		FROM: CUT WIRE OR SHIELD STRIP WIRE OR JACKET CIRCUIT POINT		TYPE		TERMINATION SPEC. ITEM NO.		NO.	TO: CUT WIRE OR SHIELD STRIP WIRE OR JACKET CIRCUIT POINT		TYPE		TERMINATION SPEC. ITEM NO.		NO.
B 508	42		P99-A*		25N					P25-B*		25N				
B 509	41		P34-J		25N					P25-V		25N				
B 510	42		P99-Q*		25N					P24-R		25N				
B 511	42		P99-W*		25N					P24-P		25N				
B 512	42		P99-AA		25N					P24-KK		25N				
B 513	42		P99-U*		25N					TB 8- 6		20N		111		
B 514	42		P99-G*		25N					P24-D*		25N				
B 515	46			225		200	85		7		400		370	48	52	846
B 515B	41		TB17- 68		16N		107			SHLD B 515		25N				
B 515L			P85-R*		25N					TB17- 69CD		16N		107		
B 515R			P85-P*		25N					TB17- 69AB		16N		107		
B 516	46			225		200	85		7		400		370	48	52	846
B 516B	41		TB17- 59		16N		107			SHLD B 516		25N				
B 516L			P85-NN		25N					TB17- 60CD		16N		107		
B 516R			P85-MM		25N					TB17- 60AB		16N		107		
B 517	46			225		200	85		7		225		200	48	52	845
B 517B	41		E 41		25N					SHLD B 517		25N				
B 517L			P10-K*		25N					J 4-B		25N				

1 THE STD CONDUCTOR TERMINATION FIGURES ARE PER
2 DIMENSIONS ARE IN INCHES AND TWO PLACE DECIMALS.

MANNED SPACECRAFT CENTER HOUSTON, TEXAS | SIZE A | 1900943
SCALE - NONE | REV LTR AR | SHEET 65 OF 188

MIL 2089 - 4-63 WIR

CONDUCTOR NUMBER	ITEM NO.		FROM: CUT WIRE OR SHIELD STRIP WIRE OR JACKET CIRCUIT POINT		TYPE		TERMINATION SPEC. ITEM NO.		NO.	TO: CUT WIRE OR SHIELD STRIP WIRE OR JACKET CIRCUIT POINT		TYPE		TERMINATION SPEC. ITEM NO.		NO.
B 517R			P10-I*		25N					J 4-A		25N				
B 518	46			225		200	85		7		225		200	48	52	845
B 518B	41		E 41		25N					SHLD B 518		25N				
B 518L			P10-Z		25N					J 4-E		25N				
B 518R			P10-Y		25N					J 4-D		25N				
B 519	46			225		200	85		7		225		200	48	52	845
B 519B	41		E 41		25N					SHLD B 519		25N				
B 519L			P85-GG		25N					J 4-H		25N				
B 519R			P85-FF		25N					J 4-G		25N				
B 520	46			225		200	85		7		400		370	48	52	846
B 520B	41		TB17- 62		16N		107			SHLD B 520		25N				
B 520L			P84-NN		25N					TB17- 61CD		16N		107		
B 520R			P84-MM		25N					TB17- 61AB		16N		107		
B 521	46			225		200	85		7		400		370	48	52	846
B 521B	41		TB17- 62		16N		107			SHLD B 521		25N				
B 521L			P 9-NN		25N					TB17- 63CD		16N		107		
B 521R			P 9-MM		25N					TB17- 63AB		16N		107		
B 522	46			225		200	85		7		400		370	48	52	846

1 THE STD CONDUCTOR TERMINATION FIGURES ARE PER
2 DIMENSIONS ARE IN INCHES AND TWO PLACE DECIMALS.

MANNED SPACECRAFT CENTER HOUSTON, TEXAS | SIZE A | 1900943
SCALE - NONE | REV LTR AR | SHEET 66 OF 188

MIL 2089 - 4-63 WIR

CONDUCTOR NUMBER	ITEM NO.		FROM: CUT WIRE OR SHIELD STRIP WIRE OR JACKET CIRCUIT POINT		TYPE		TERMINATION SPEC. ITEM NO.		NO.	TO: CUT WIRE OR SHIELD STRIP WIRE OR JACKET CIRCUIT POINT		TYPE		TERMINATION SPEC. ITEM NO.		NO.
B 522B	41		TB17- 65		16N		107			SHLD B 522		25N				
B 522L			P83-LL		25N					TB17- 66CD		16N		107		
B 522R			P83-KK		25N					TB17- 66AB		16N		107		
B 523	46			225		200	85		7		400		370	48	52	846
B 523B	41		TB17- 68		16N		107			SHLD B 523		25N				
B 523L			P83-NN		25N					TB17- 67CD		16N		107		
B 523R			P83-MM		25N					TB17- 67AB		16N		107		
B 524	46			225		200	85		7		400		370	48	52	846
B 524B	41		TB17- 65		16N		107			SHLD B 524		25N				
B 524L			P86-NN		25N					TB17- 64CD		16N		107		
B 524R			P86-MM		25N					TB17- 64AB		16N		107		
B 525	46			225		200	85		7		225		200	48	52	845
B 525B	41		E 41		25N					SHLD B 525		25N				
B 525L			P84-GG		25N					J 4-L		25N				
B 525R			P84-FF		25N					J 4-K		25N				
B 526	46			225		200	85		7		225		200	48	52	845
B 526B	41		E 41		25N					SHLD B 526		25N				
B 526L			P 9-GG		25N					J 4-P		25N				

1 THE STD CONDUCTOR TERMINATION FIGURES ARE PER
2 DIMENSIONS ARE IN INCHES AND TWO PLACE DECIMALS.

MANNED SPACECRAFT CENTER HOUSTON, TEXAS | SIZE A | 1900943
SCALE - NONE | REV LTR AR | SHEET 67 OF 188

MIL 2089 - 4-63 WIR

CONDUCTOR INDIVIDUAL LENGTH NUMBER	ITEM NO.	2	FROM CUT WIRE OR SHIELD STRIP WIRE OR JACKET CIRCUIT POINT	3	T I N	2	TERMINATION SPEC. 1 ITEM NO.	NO.	TO CUT WIRE OR SHIELD STRIP WIRE OR JACKET CIRCUIT POINT	3	T I N	2	TERMINATION SPEC 1 ITEM NO.	NO.
B 526R			P 9-FF	25N					J 4-N	25N				
B 527	46			225	200	85		7		225	200	48	52	845
B 527B	41		E 41	25N					SHLD B 527	25N				
B 527L			P86-GG	25N					J 4-T	25N				
B 527R			P86-FF	25N					J 4-S	25N				
B 528	46			225	200	85		7		225	200	48	52	845
B 528B	41		E 41	25N					SHLD B 528	25N				
B 528L			P83-J*	25N					J 4-J*	25N				
B 528R			P83-H*	25N					J 4-V	25N				
B 529	46			225	200	85		7		225	200	48	52	845
B 529B	41		E 41	25N					SHLD B 529	25N				
B 529L			P83-GG	25N					J 4-N*	25N				
B 529R			P83-FF	25N					J 4-M*	25N				
B 530	46			225	200	48	52	845		400	370	48	52	846
B 530A	41		SHLD B 530	25N					E 29	25N				
B 530L			P20-P*	25N					TB20- 76CD	16N		107		
B 530R			P20-Q*	25N					TB20- 76AB	16N		107		
B 531	46			225	200	85		7		400	370	48	52	846

1 THE STD CONDUCTOR TERMINATION FIGURES ARE PER
2 DIMENSIONS ARE IN INCHES AND TWO PLACE DECIMALS.

MANNED SPACECRAFT CENTER HOUSTON, TEXAS | SIZE A | 1900943
SCALE - NONE | REV LTR AR | SHEET 68 OF 188

MIL 2089 - 4-65 WIR

CONDUCTOR INDIVIDUAL LENGTH NUMBER	ITEM NO.	2	FROM CUT WIRE OR SHIELD STRIP WIRE OR JACKET CIRCUIT POINT	3	T I N	2	TERMINATION SPEC. 1 ITEM NO.	NO.	TO CUT WIRE OR SHIELD STRIP WIRE OR JACKET CIRCUIT POINT	3	T I N	2	TERMINATION SPEC 1 ITEM NO.	NO.
B 531B	41		TB19- 27	16N		107			SHLD B 531	25N				
B 531L			P65-F*	25N					TB19- 26CD	16N		107		
B 531R			P65-F	25N					TB19- 26AB	16N		107		
B 532	46			225	200	85		7		400	370	48	52	846
B 532B	41		TB19- 24	16N		107			SHLD B 532	25N				
B 532L			P65-C*	25N					TB19- 25CD	16N		107		
B 532R			P65-C	25N					TB19- 25AB	16N		107		
B 533	46			225	200	85		7		400	370	48	52	846
B 533B	41		TB18- 9	16N		107			SHLD B 533	25N				
B 533L			P65-G*	25N					TB18- 8CD	16N		107		
B 533R			P65-G	25N					TB18- 8AB	16N		107		
B 534	46			225	200	85		7		400	370	48	52	846
B 534B	41		TB20- 18	16N		107			SHLD B 534	25N				
B 534L			P 9-CC	25N					TB20- 19CD	16N		107		
B 534R			P 9-BB	25N					TB20- 19AB	16N		107		
B 535	46			225	200	85		7		400	370	48	52	846
B 535B	41		TB20- 12	16N		107			SHLD B 535	25N				
B 535L			P86-CC	25N					TB20- 11CD	16N		107		

1 THE STD CONDUCTOR TERMINATION FIGURES ARE PER
2 DIMENSIONS ARE IN INCHES AND TWO PLACE DECIMALS.

MANNED SPACECRAFT CENTER HOUSTON, TEXAS | SIZE A | 1900943
SCALE - NONE | REV LTR AR | SHEET 69 OF 188

MIL 2089 - 4-65 WIR

CONDUCTOR INDIVIDUAL LENGTH NUMBER	ITEM NO.	2	FROM CUT WIRE OR SHIELD STRIP WIRE OR JACKET CIRCUIT POINT	3	T I N	2	TERMINATION SPEC. 1 ITEM NO.	NO.	TO CUT WIRE OR SHIELD STRIP WIRE OR JACKET CIRCUIT POINT	3	T I N	2	TERMINATION SPEC 1 ITEM NO.	NO.
B 535R			P86-BB	25N					TB20- 11AB	16N		107		
B 536			DELETED											
B 536A			DELETED											
B 536L			DELETED											
B 536R			DELETED											
B 537			DELETED											
B 537A			DELETED											
B 537L			DELETED											
B 537R			DELETED											
B 538	41		P82-HH	25N					TB24- 2	20N		111		
B 539	41		P82-JJ	25N					TB24- 5	20N		111		
B 540	41		P82-KK	25N					TB24- 8	20N		111		
B 541	42		P36-NN	25N					TB18- 98AB	16N		107		
B 542	42		P36-LL	25N					TB18- 97CD	16N		107		
B 543	178		E 80	40N			183		TB23- 9	40N		179		
B 544	46			225	200	85		7		400	370	48	52	846
B 544B	41		TB18- 52	16N		107			SHLD B 544	25N				
B 544L			P10-X*	25N					TB18- 53CD	16N		107		

1 THE STD CONDUCTOR TERMINATION FIGURES ARE PER
2 DIMENSIONS ARE IN INCHES AND TWO PLACE DECIMALS.

MANNED SPACECRAFT CENTER HOUSTON, TEXAS | SIZE A | 1900943
SCALE - NONE | REV LTR AR | SHEET 70 OF 188

MIL 2089 - 4-65 WIR

CONDUCTOR INDIVIDUAL LENGTH NUMBER	ITEM NO.	2	FROM CUT WIRE OR SHIELD STRIP WIRE OR JACKET CIRCUIT POINT	3	T I N	2	TERMINATION SPEC. 1 ITEM NO.	NO.	TO CUT WIRE OR SHIELD STRIP WIRE OR JACKET CIRCUIT POINT	3	T I N	2	TERMINATION SPEC 1 ITEM NO.	NO.
B 544R			P10-W*	25N					TB18- 53AB	16N		107		
B 545	46			225	200	85		7		400	370	48	52	846
B 545B	41		TB18- 55	16N		107			SHLD B 545	25N				
B 545L			P10-Z*	25N					TB18- 56CD	16N		107		
B 545R			P10-Y*	25N					TB18- 56AB	16N		107		
B 546	46			225	200	85		7		400	370	48	52	846
B 546B	41		TB18- 58	16N		107			SHLD B 546	25N				
B 546L			P10-CC	25N					TB18- 57CD	16N		107		
B 546R			P10-BB	25N					TB18- 57AB	16N		107		
B 547	46			225	200	85		7		400	370	48	52	846
B 547B	41		TB18- 49	16N		107			SHLD B 547	25N				
B 547L			P10-EE	25N					TB18- 50CD	16N		107		
B 547R			P10-DD	25N					TB18- 50AB	16N		107		
B 548	46			225	200	85		7		400	370	48	52	846
B 548B	41		TB18- 52	16N		107			SHLD B 548	25N				
B 548L			P85-Z*	25N					TB18- 51CD	16N		107		
B 548R			P85-Y*	25N					TB18- 51AB	16N		107		
B 549	46			225	200	85		7		400	370	48	52	846

1 THE STD CONDUCTOR TERMINATION FIGURES ARE PER
2 DIMENSIONS ARE IN INCHES AND TWO PLACE DECIMALS.

MANNED SPACECRAFT CENTER HOUSTON, TEXAS | SIZE A | 1900943
SCALE - NONE | REV LTR AR | SHEET 71 OF 188

MIL 2089 - 4-65 WIR

CONDUCTOR INDIVIDUAL LENGTH NUMBER	ITEM NO.	2	FROM CUT WIRE OR SHIELD STRIP WIRE OR JACKET CIRCUIT POINT	3	TYPE	2	TERMINATION SPEC. 1 ITEM NO.					NO.	TO CUT WIRE OR SHIELD STRIP WIRE OR JACKET CIRCUIT POINT	3	TYPE	2	TERMINATION SPEC 1 ITEM NO.					NO.
B 549B	41		TB18- 55	16N			107						SHLD B 549	25N									
B 549L			P84-X*	25N									TB18- 54CD	16N			107						
B 549R			P84-W*	25N									TB18- 54AB	16N			107						
B 550	46			225		200	85			7				400		370	48	52	846				
B 550B	41		TB18- 61	16N			107						SHLD B 550	25N									
B 550L			P86-Z*	25N									TB18- 60CD	16N			107						
B 550R			P86-Y*	25N									TB18- 60AB	16N			107						
B 551	16		P33-A	25N									TB25- 9	40N			111						
B 552	46			225		200	85			7				400		370	48	52	846				
B 552B	41		TB17- 74	16N			107						SHLD B 552	25N									
B 552L			P85-R	25N									TB17- 73CD	16N			107						
B 552R			P85-P	25N									TB17- 73AB	16N			107						
B 553	46			225		200	85			7				400		370	48	52	846				
B 553B	41		TB17- 71	16N			107						SHLD B 553	25N									
B 553L			P85-X	25N									TB17- 70CD	16N			107						
B 553R			P85-W	25N									TB17- 70AB	16N			107						
B 554	46			225		200	85			7				400		370	48	52	846				
B 554B	41		TB17- 74	16N			107						SHLD B 554	25N									

1 THE STD CONDUCTOR TERMINATION FIGURES ARE PER
2 DIMENSIONS ARE IN INCHES AND TWO PLACE DECIMALS.

MANNED SPACECRAFT CENTER HOUSTON, TEXAS | SIZE A | 1900943
SCALE-NONE | REV LTR AR | SHEET 72 OF 188

MIL 2069 - 4-65 WIN

CONDUCTOR INDIVIDUAL LENGTH NUMBER	ITEM NO.	2	FROM CUT WIRE OR SHIELD STRIP WIRE OR JACKET CIRCUIT POINT	3	TYPE	2	TERMINATION SPEC. 1 ITEM NO.					NO.	TO CUT WIRE OR SHIELD STRIP WIRE OR JACKET CIRCUIT POINT	3	TYPE	2	TERMINATION SPEC 1 ITEM NO.					NO.
B 554L			P84-N	25N									TB17- 75CD	16N			107						
B 554R			P84-M	25N									TB17- 75AB	16N			107						
B 555	46			225		200	85			7				400		370	48	52	846				
B 555B	41		TB17- 80	16N			107						SHLD B 555	25N									
B 555L			P85-J*	25N									TB17- 79CD	16N			107						
B 555R			P85-H*	25N									TB17- 79AB	16N			107						
B 556	46			225		200	85			7				400		370	48	52	846				
B 556B	41		TB17- 77	16N			107						SHLD B 556	25N									
B 556L			P 9-R	25N									TB17- 76CD	16N			107						
B 556R			P 9-P	25N									TB17- 76AB	16N			107						
B 557	46			225		200	85			7				400		370	48	52	846				
B 557B	41		TB20- 72	16N			107						SHLD B 557	25N									
B 557L			P82-F	25N									TB20- 70	16N			107						
B 557R			P82-G	25N									TB20- 71	16N			107						
B 558	46			225		200	85			7				400		370	48	52	846				
B 558B	41		TB20- 80	16N			107						SHLD B 558	25N									
B 558L			P82-B	25N									TB20- 78	16N			107						
B 558R			P82-C	25N									TB20- 79	16N			107						

1 THE STD CONDUCTOR TERMINATION FIGURES ARE PER
2 DIMENSIONS ARE IN INCHES AND TWO PLACE DECIMALS.

MANNED SPACECRAFT CENTER HOUSTON, TEXAS | SIZE A | 1900943
SCALE-NONE | REV LTR AR | SHEET 73 OF 188

MIL 2069 - 4-65 WIN

CONDUCTOR INDIVIDUAL LENGTH NUMBER	ITEM NO.	2	FROM CUT WIRE OR SHIELD STRIP WIRE OR JACKET CIRCUIT POINT	3	TYPE	2	TERMINATION SPEC. 1 ITEM NO.					NO.	TO CUT WIRE OR SHIELD STRIP WIRE OR JACKET CIRCUIT POINT	3	TYPE	2	TERMINATION SPEC 1 ITEM NO.					NO.
B 559	46			225		200	85			7				400		370	48	52	846				
B 559B	41		TB20- 21	16N			107						SHLD B 559	25N									
B 559L			P 9-N	25N									TB20- 20CD	16N			107						
B 559R			P 9-M	25N									TB20- 20AB	16N			107						
B 560	46			225		200	85			7				400		370	48	52	846				
B 560B	41		TB18- 64	16N			107						SHLD B 560	25N									
B 560L			P10-JJ	25N									TB18- 65CD	16N			107						
B 560R			P10-MM	25N									TB18- 65AB	16N			107						
B 561	46			225		200	85			7				400		370	48	52	846				
B 561B	41		TB18- 67	16N			107						SHLD B 561	25N									
B 561L			P10-GG	25N									TB18- 68CD	16N			107						
B 561R			P10-FF	25N									TB18- 68AB	16N			107						
B 562	46			225		200	85			7				400		370	48	52	846				
B 562B	41		TB18- 67	16N			107						SHLD B 562	25N									
B 562L			P85-X*	25N									TB18- 66CD	16N			107						
B 562R			P85-W*	25N									TB18- 66AB	16N			107						
B 563	46			225		200	85			7				400		370	48	52	846				
B 563B	41		TB18- 70	16N			107						SHLD B 563	25N									

1 THE STD CONDUCTOR TERMINATION FIGURES ARE PER
2 DIMENSIONS ARE IN INCHES AND TWO PLACE DECIMALS.

MANNED SPACECRAFT CENTER HOUSTON, TEXAS | SIZE A | 1900943
SCALE-NONE | REV LTR AR | SHEET 74 OF 188

MIL 2069 - 4-65 WIN

CONDUCTOR INDIVIDUAL LENGTH NUMBER	ITEM NO.	2	FROM CUT WIRE OR SHIELD STRIP WIRE OR JACKET CIRCUIT POINT	3	TYPE	2	TERMINATION SPEC. 1 ITEM NO.					NO.	TO CUT WIRE OR SHIELD STRIP WIRE OR JACKET CIRCUIT POINT	3	TYPE	2	TERMINATION SPEC 1 ITEM NO.					NO.
B 563L			P84-Z*	25N									TB18- 69CD	16N			107						
B 563R			P84-Y*	25N									TB18- 69AB	16N			107						
B 564	46			225		200	85			7				400		370	48	52	846				
B 564B	41		TB18- 64	16N			107						SHLD B 564	25N									
B 564L			P 9-X*	25N									TB18- 63CD	16N			107						
B 564R			P 9-W*	25N									TB18- 63AB	16N			107						
B 565	46			225		200	85			7				400		370	48	52	846				
B 565B	41		TB18- 58	16N			107						SHLD B 565	25N									
B 565L			P 9-Z*	25N									TB18- 59CD	16N			107						
B 565R			P 9-Y*	25N									TB18- 59AB	16N			107						
B 566	46			225		200	85			7				400		370	48	52	846				
B 566B	41		TB18- 61	16N			107						SHLD B 566	25N									
B 566L			P86-X*	25N									TB18- 62CD	16N			107						
B 566R			P86-W*	25N									TB18- 62AB	16N			107						
B 567	40		P38-A	25N									TB25- 6	20N			111						
B 569	46			225		200	85			7				400		370	48	52	846				
B 569B	41		TB20- 6	16N			107						SHLD B 569	25N									
B 569L			P91-H*	25N									TB20- 8CD	16N			107						

1 THE STD CONDUCTOR TERMINATION FIGURES ARE PER
2 DIMENSIONS ARE IN INCHES AND TWO PLACE DECIMALS.

MANNED SPACECRAFT CENTER HOUSTON, TEXAS | SIZE A | 1900943
SCALE-NONE | REV LTR AR | SHEET 75 OF 188

MIL 2069 - 4-65 WIN

GMI WIRING HARNESS B AR 1900943

CONDUCTOR NUMBER	INDIVIDUAL LENGTH ITEM NO.	2	FROM CUT WIRE OR SHIELD STRIP WIRE OR JACKET CIRCUIT POINT	2	T I N	2	TERMINATION SPEC. 1 ITEM NO.	NO.	TO CUT WIRE OR SHIELD STRIP WIRE OR JACKET CIRCUIT POINT	2	T I N	2	TERMINATION SPEC. 1 ITEM NO.	NO.
B 569R			P91-H	25N					TB20- 8AB	16N		107		
B 570	46			225	200	85		7		400	370	48 52	846	
B 570B	41		TB21- 6	16N		107			SHLD B 570	25N				
B 570L			P91-H*	25N					TB21- 7CD	16N		107		
B 570R			P91-H	25N					TB21- 7AB	16N		107		
B 571	46			225	200	85		7		400	370	48 52	846	
B 571B	41		TB21- 9	16N		107			SHLD B 571	25N				
B 571L			P91-P*	25N					TB21- 8CD	16N		107		
B 571R			P91-P	25N					TB21- 8AB	16N		107		
B 572	46			225	200	85		7		400	370	48 52	846	
B 572B	41		TB19- 7	16N		107			SHLD B 572	25N				
B 572L			P65-E*	25N					TB19- 6CD	16N		107		
B 572R			P65-E	25N					TB19- 6AB	16N		107		
B 573	46			225	200	85		7		400	370	48 52	846	
B 573B	41		TB19- 27	16N		107			SHLD B 573	25N				
B 573L			P65-D*	25N					TB19- 28CD	16N		107		
B 573R			P65-D	25N					TB19- 28AB	16N		107		
B 574	46			225	200	85		7		400	370	48 52	846	

1 THE STD CONDUCTOR TERMINATION FIGURES ARE PER
2 DIMENSIONS ARE IN INCHES AND TWO PLACE DECIMALS.

MANNED SPACECRAFT CENTER HOUSTON, TEXAS | SIZE A | 1900943

SCALE - NONE | REV LTR AR | SHEET 76 OF 188

MIL 2049 - 4-63 WIR

GMI WIRING HARNESS B AR 1900943

CONDUCTOR NUMBER	INDIVIDUAL LENGTH ITEM NO.	2	FROM CUT WIRE OR SHIELD STRIP WIRE OR JACKET CIRCUIT POINT	2	T I N	2	TERMINATION SPEC. 1 ITEM NO.	NO.	TO CUT WIRE OR SHIELD STRIP WIRE OR JACKET CIRCUIT POINT	2	T I N	2	TERMINATION SPEC. 1 ITEM NO.	NO.
B 574B	41		TB17- 83	16N		107			SHLD B 574	25N				
B 574L			P10-E*	25N					TB17- 84CD	16N		107		
B 574R			P10-D*	25N					TB17- 84AB	16N		107		
B 575	46			225	200	85		7		400	370	48 52	846	
B 575B	41		TB17- 86	16N		107			SHLD B 575	25N				
B 575L			P10-G*	25N					TB17- 85CD	16N		107		
B 575R			P10-F*	25N					TB17- 85AB	16N		107		
B 576	46			225	200	85		7		400	370	48 52	846	
B 576B	41		TB17- 83	16N		107			SHLD B 576	25N				
B 576L			P10-J*	25N					TB17- 82CD	16N		107		
B 576R			P10-H*	25N					TB17- 82AB	16N		107		
B 577	46			225	200	85		7		400	370	48 52	846	
B 577B	41		TB17- 80	16N		107			SHLD B 577	25N				
B 577L			P 9-J*	25N					TB17- 81CD	16N		107		
B 577R			P 9-H*	25N					TB17- 81AB	16N		107		
B 578	46			225	200	85		7		400	370	48 52	846	
B 578B	41		TB17- 88	16N		107			SHLD B 578	25N				
B 578L			P83-T*	25N					TB17- 89CD	16N		107		

1 THE STD CONDUCTOR TERMINATION FIGURES ARE PER
2 DIMENSIONS ARE IN INCHES AND TWO PLACE DECIMALS.

MANNED SPACECRAFT CENTER HOUSTON, TEXAS | SIZE A | 1900943

SCALE - NONE | REV LTR AR | SHEET 77 OF 188

MIL 2049 - 4-63 WIR

GMI WIRING HARNESS B AR 1900943

CONDUCTOR NUMBER	INDIVIDUAL LENGTH ITEM NO.	2	FROM CUT WIRE OR SHIELD STRIP WIRE OR JACKET CIRCUIT POINT	2	T I N	2	TERMINATION SPEC. 1 ITEM NO.	NO.	TO CUT WIRE OR SHIELD STRIP WIRE OR JACKET CIRCUIT POINT	2	T I N	2	TERMINATION SPEC. 1 ITEM NO.	NO.
B 578R			P83-S*	25N					TB17- 89AB	16N		107		
B 579	40		P18-A	25N					TB25- 1	20N		111		
B 580	46			225	200	85		7		400	370	48 52	846	
B 580B	41		TB20- 36	16N		107			SHLD B 580	25N				
B 580L			P85-CC	25N					TB20- 37CD	16N		107		
B 580R			P85-BB	25N					TB20- 37AB	16N		107		
B 581	46			225	200	85		7		400	370	48 52	846	
B 581B	41		TB20- 39	16N		107			SHLD B 581	25N				
B 581L			P84-CC	25N					TB20- 38CD	16N		107		
B 581R			P84-BB	25N					TB20- 38AB	16N		107		
B 582	46			225	200	85		7		400	370	48 52	846	
B 582B	41		TB20- 36	16N		107			SHLD B 582	25N				
B 582L			P83-CC	25N					TB20- 35CD	16N		107		
B 582R			P83-BB	25N					TB20- 35AB	16N		107		
B 583	46			225	200	85		7		400	370	48 52	846	
B 583B	41		TB19- 36	16N		107			SHLD B 583	25N				
B 583L			P86-G*	25N					TB19- 40CD	16N		107		
B 583R			P86-F*	25N					TB19- 51AB	16N		107		

1 THE STD CONDUCTOR TERMINATION FIGURES ARE PER
2 DIMENSIONS ARE IN INCHES AND TWO PLACE DECIMALS.

MANNED SPACECRAFT CENTER HOUSTON, TEXAS | SIZE A | 1900943

SCALE - NONE | REV LTR AR | SHEET 78 OF 188

MIL 2049 - 4-63 WIR

GMI WIRING HARNESS B AR 1900943

CONDUCTOR NUMBER	INDIVIDUAL LENGTH ITEM NO.	2	FROM CUT WIRE OR SHIELD STRIP WIRE OR JACKET CIRCUIT POINT	2	T I N	2	TERMINATION SPEC. 1 ITEM NO.	NO.	TO CUT WIRE OR SHIELD STRIP WIRE OR JACKET CIRCUIT POINT	2	T I N	2	TERMINATION SPEC. 1 ITEM NO.	NO.
B 584	46			225	200	85		7		400	370	48 52	846	
B 584B	41		TB20- 15	16N		107			SHLD B 584	25N				
B 584L			P35-M	25N					TB20- 20CD	16N		107		
B 584R			P35-N	25N					TB20- 20AB	16N		107		
B 585	42		P64-CC	25N					TB20- 14AB	16N		107		
B 586	46			225	200	85		7		400	370	48 52	846	
B 586B	41		TB18- 75	16N		107			SHLD B 586	25N				
B 586L			P 9-JJ	25N					TB18- 74CD	16N		107		
B 586R			P 9-HH	25N					TB18- 74AB	16N		107		
B 587	46			225	200	85		7		400	370	48 52	846	
B 587B	41		TB18- 78	16N		107			SHLD B 587	25N				
B 587L			P86-JJ	25N					TB18- 76	16N		107		
B 587R			P86-HH	25N					TB18- 77	16N		107		
B 588	42		P34-T	25N					TB17- 2AB	16N		107		
B 589	65			225	200	86	87	856		225	200	86	87	856
B 589A	41		SHLD B 589	25N					TB27- 6B	16N		107		
B 589B	41		P14-G	25N					SHLD B 589	25N				
B 589E			TB27- 5B	16N		107			P14-F	25N				

1 THE STD CONDUCTOR TERMINATION FIGURES ARE PER
2 DIMENSIONS ARE IN INCHES AND TWO PLACE DECIMALS.

MANNED SPACECRAFT CENTER HOUSTON, TEXAS | SIZE A | 1900943

SCALE - NONE | REV LTR AR | SHEET 79 OF 188

MIL 2049 - 4-63 WIR

CONDUCTOR INDIVIDUAL LENGTH NUMBER	ITEM NO.	2	FROM CUT WIRE OR SHIELD STRIP WIRE OR JACKET CIRCUIT POINT	3	TIN	2	TERMINATION SPEC. 1 ITEM NO.						NO.	TO CUT WIRE OR SHIELD STRIP WIRE OR JACKET CIRCUIT POINT	3	TIN	2	TERMINATION SPEC. 1 ITEM NO.						NO.
B 590	65			225		200	86	87	856						225		200	86	87	856					
B 590A	41		SHLD B 590	25N										TB27- 6C	16N			107							
B 590B	41		P14-C*	25N										SHLD B 590	25N										
B 590E			TB27- 5C	16N			107							P14-D*	25N										
B 591	42		P40-N	25N										P65-AA	25N										
B 592	42		P40-P	25N										P65-BB	25N										
B 594	42		P40-S	25N										P63-A*	25N										
B 595	42		P40-T	25N										P63-B*	25N										
B 596	42		P40-U	25N										P63-C*	25N										
B 597	42		P40-V	25N										P63-D*	25N										
B 598	42		P40-W	25N										P63-E*	25N										
B 599	42		P40-X	25N										P63-F*	25N										
B 600	42		P40-Y	25N										P63-G*	25N										
B 601	42		P40-Z	25N										P63-H*	25N										
B 602	42		P40-A*	25N										P63-I*	25N										
B 603	42		P40-C*	25N										P63-Z	25N										
B 604	42		P40-D*	25N										P63-Y	25N										
B 605	42		P40-E*	25N										P63-X	25N										

1 THE STD CONDUCTOR TERMINATION FIGURES ARE PER
2 DIMENSIONS ARE IN INCHES AND TWO PLACE DECIMALS.

MANNED SPACECRAFT CENTER HOUSTON, TEXAS | SIZE A | 1900943

SCALE - NONE | REV LTR AR | SHEET 80 OF 188

MIL 2088 - 4-63 WIN

CONDUCTOR INDIVIDUAL LENGTH NUMBER	ITEM NO.	2	FROM CUT WIRE OR SHIELD STRIP WIRE OR JACKET CIRCUIT POINT	3	TIN	2	TERMINATION SPEC. 1 ITEM NO.						NO.	TO CUT WIRE OR SHIELD STRIP WIRE OR JACKET CIRCUIT POINT	3	TIN	2	TERMINATION SPEC. 1 ITEM NO.						NO.
B 606	42		P40-F*	25N										P63-W	25N										
B 607	42		P40-G*	25N										P63-V	25N										
B 608	42		P40-H*	25N										P63-U	25N										
B 609	42		P40-I*	25N										P63-T	25N										
B 610	42		P40-J*	25N										P63-S	25N										
B 611	42		P40-K*	25N										P63-R	25N										
B 612	42		P40-M*	25N										P65-CC	25N										
B 613	42		P39-A	25N										P64-B	25N										
B 614	42		P39-B	25N										P64-C	25N										
B 615	42		P39-S	25N										P64-U	25N										
B 616	42		P39-T	25N										P64-V	25N										
B 617	42		P39-C	25N										P64-N	25N										
B 618	42		P39-D	25N										P64-D	25N										
B 619	42		P39-E	25N										P64-E	25N										
B 620	42		P39-F	25N										P64-F	25N										
B 621	42		P39-G	25N										P64-G	25N										
B 622	42		P39-H	25N										P64-H	25N										
B 623	42		P39-J	25N										P64-J	25N										

1 THE STD CONDUCTOR TERMINATION FIGURES ARE PER
2 DIMENSIONS ARE IN INCHES AND TWO PLACE DECIMALS.

MANNED SPACECRAFT CENTER HOUSTON, TEXAS | SIZE A | 1900943

SCALE - NONE | REV LTR AR | SHEET 81 OF 188

MIL 2088 - 4-63 WIN

CONDUCTOR INDIVIDUAL LENGTH NUMBER	ITEM NO.	2	FROM CUT WIRE OR SHIELD STRIP WIRE OR JACKET CIRCUIT POINT	3	TIN	2	TERMINATION SPEC. 1 ITEM NO.						NO.	TO CUT WIRE OR SHIELD STRIP WIRE OR JACKET CIRCUIT POINT	3	TIN	2	TERMINATION SPEC. 1 ITEM NO.						NO.
B 624	42		P39-K	25N										P64-K	25N										
B 625	42		P39-L	25N										P64-L	25N										
B 626	42		P39-M	25N										P64-M	25N										
B 627	42		P39-N	25N										P64-P	25N										
B 628	42		P39-P	25N										P64-W	25N										
B 629	42		P39-R	25N										P64-X	25N										
B 630	42		P39-U	25N										P64-H*	25N										
B 631	42		P39-V	25N										P64-Y	25N										
B 632	42		P39-W	25N										P64-Z	25N										
B 633	42		P39-X	25N										P64-A*	25N										
B 634	42		P39-Y	25N										P64-B*	25N										
B 635	42		P39-Z	25N										P64-C*	25N										
B 636	42		P39-A*	25N										P64-D*	25N										
B 637	42		P39-B*	25N										P64-E*	25N										
B 638	42		P39-C*	25N										P64-F*	25N										
B 639	42		P39-D*	25N										P64-G*	25N										
B 640	42		P39-E*	25N										P64-I*	25N										
B 641	42		P39-F*	25N										P64-U*	25N										

1 THE STD CONDUCTOR TERMINATION FIGURES ARE PER
2 DIMENSIONS ARE IN INCHES AND TWO PLACE DECIMALS.

MANNED SPACECRAFT CENTER HOUSTON, TEXAS | SIZE A | 1900943

SCALE - NONE | REV LTR AR | SHEET 82 OF 188

MIL 2088 - 4-63 WIN

CONDUCTOR INDIVIDUAL LENGTH NUMBER	ITEM NO.	2	FROM CUT WIRE OR SHIELD STRIP WIRE OR JACKET CIRCUIT POINT	3	TIN	2	TERMINATION SPEC. 1 ITEM NO.						NO.	TO CUT WIRE OR SHIELD STRIP WIRE OR JACKET CIRCUIT POINT	3	TIN	2	TERMINATION SPEC. 1 ITEM NO.						NO.
B 642	42		P39-G*	25N										P64-T*	25N										
B 643	42		P39-H*	25N										P64-S*	25N										
B 644	42		P39-I*	25N										P64-R*	25N										
B 645	42		P39-J*	25N										P64-Q*	25N										
B 646	42		P39-K*	25N										P64-P*	25N										
B 647	42		P39-M*	25N										P64-N*	25N										
B 648	42		P39-N*	25N										P64-M*	25N										
B 651	42		P40-T*	25N										P64-R	25N										
B 652	16		P38-F	25N										P63-X*	25N										
B 653	16		P38-G	25N										P63-Y*	25N										
B 654	16		P38-H	25N										P63-W*	25N										
B 655	46			225		200	85			7					400		370	48	52	846					
B 655B	41		TB17- 91	16N			107							SHLD B 655	25N										
B 655L			P83-G*	25N										TB17- 90CD	16N			107							
B 655R			P83-F*	25N										TB17- 90AB	16N			107							
B 656	46			225		200	85			7					400		370	48	52	846					
B 656B	41		TB17- 91	16N			107							SHLD B 656	25N										
B 656L			P86-T*	25N										TB17- 92CD	16N			107							

1 THE STD CONDUCTOR TERMINATION FIGURES ARE PER
2 DIMENSIONS ARE IN INCHES AND TWO PLACE DECIMALS.

MANNED SPACECRAFT CENTER HOUSTON, TEXAS | SIZE A | 1900943

SCALE - NONE | REV LTR AR | SHEET 83 OF 188

MIL 2088 - 4-63 WIN

CONDUCTOR INDIVIDUAL LENGTH NUMBER	ITEM NO.	2	FROM CUT WIRE OR SHIELD STRIP WIRE OR JACKET CIRCUIT POINT	2	T I N	2	TERMINATION SPEC. 1 ITEM NO.					NO.	TO CUT WIRE OR SHIELD STRIP WIRE OR JACKET CIRCUIT POINT	2	T I N	2	TERMINATION SPEC 1 ITEM NO.					NO.
B 656R			P86-S*	25	N								TB17- 92AB	16	N		107						
B 657	40		P 2-A	25	N								TB25- 3	20	N		111						
B 658	40		P50-A	25	N								TB25- 3	20	N		111						
B 659	42		P36-CC	25	N								P25-A*	25	N								
B 660	42		P36-Z*	25	N								P24-T*	25	N								
B 661	42		P36-H*	25	N								P24-I*	25	N								
B 662	178		TB25- 14	40	N		179						E 1	40	N		179						
B 663	46			225		200	48	52	846					400		370	48	52	846				
B 663B	41		TB18- 81	16	N		107						SHLD B 663	25	N								
B 663L			P85-T*	25	N								TB18- 82CD	16	N		107						
B 663R			P85-S*	25	N								TB18- 82AB	16	N		107						
B 664	46			225		200	85		7					400		370	48	52	846				
B 664B	41		TB18- 84	16	N		107						SHLD B 664	25	N								
B 664L			P10-R*	25	N								TB18- 85CD	16	N		107						
B 664R			P10-P*	25	N								TB18- 85AB	16	N		107						
B 665	46			225		200	85		7					400		370	48	52	846				
B 665B	41		TB18- 87	16	N		107						SHLD B 665	25	N								
B 665L			P10-T*	25	N								TB18- 86CD	16	N		107						

1 THE STD CONDUCTOR TERMINATION FIGURES ARE PER
2 DIMENSIONS ARE IN INCHES AND TWO PLACE DECIMALS.

MANNED SPACECRAFT CENTER HOUSTON, TEXAS | SIZE A | 1900943

SCALE - NONE | REV LTR AR | SHEET 84 OF 188

MIL 2089 - 4-63 WIR

CONDUCTOR INDIVIDUAL LENGTH NUMBER	ITEM NO.	2	FROM CUT WIRE OR SHIELD STRIP WIRE OR JACKET CIRCUIT POINT	2	T I N	2	TERMINATION SPEC. 1 ITEM NO.					NO.	TO CUT WIRE OR SHIELD STRIP WIRE OR JACKET CIRCUIT POINT	2	T I N	2	TERMINATION SPEC 1 ITEM NO.					NO.
B 665R			P10-S*	25	N								TB18- 86AB	16	N		107						
B 666	46			225		200	85		7					400		370	48	52	846				
B 666B	41		TB18- 84	16	N		107						SHLD B 666	25	N								
B 666L			P84-R*	25	N								TB18- 83CD	16	N		107						
B 666R			P84-P*	25	N								TB18- 83AB	16	N		107						
B 667	46			225		200	85		7					400		370	48	52	846				
B 667B	41		TB18- 90	16	N		107						SHLD B 667	25	N								
B 667L			P83-C*	25	N								TB18- 89CD	16	N		107						
B 667R			P83-B*	25	N								TB18- 89AB	16	N		107						
B 668	46			225		200	85		7					400		370	48	52	846				
B 668B	41		TB18- 87	16	N		107						SHLD B 668	25	N								
B 668L			P83-N*	25	N								TB18- 88CD	16	N		107						
B 668R			P83-M*	25	N								TB18- 88AB	16	N		107						
B 669	46			225		200	48	52	845					225		200	85		7				
B 669A	41		SHLD B 669	25	N								E 3B	25	N								
B 669L			P65-K*	25	N								P46-C	25	N								
B 669R			P65-K	25	N								P46-B	25	N								
B 670	42		P63-AA	25	N								P47-U	25	N								

1 THE STD CONDUCTOR TERMINATION FIGURES ARE PER
2 DIMENSIONS ARE IN INCHES AND TWO PLACE DECIMALS.

MANNED SPACECRAFT CENTER HOUSTON, TEXAS | SIZE A | 1900943

SCALE - NONE | REV LTR AR | SHEET 85 OF 188

MIL 2089 - 4-63 WIR

CONDUCTOR INDIVIDUAL LENGTH NUMBER	ITEM NO.	2	FROM CUT WIRE OR SHIELD STRIP WIRE OR JACKET CIRCUIT POINT	2	T I N	2	TERMINATION SPEC. 1 ITEM NO.					NO.	TO CUT WIRE OR SHIELD STRIP WIRE OR JACKET CIRCUIT POINT	2	T I N	2	TERMINATION SPEC 1 ITEM NO.					NO.
B 671	42		P63-Z*	25	N								P47-Y	25	N								
B 672	42		P63-BB	25	N								P47-T	25	N								
B 673	42		P92-V	25	N								P24-Z*	25	N								
B 674	42		P92-U	25	N								P24-Y*	25	N								
B 675	42		P92-T	25	N								P24-X*	25	N								
B 676	42		P92-R	25	N								P24-BB	25	N								
B 677	42		P92-S	25	N								P24-AA	25	N								
B 678	42		P96-A*	25	N								P24-W*	25	N								
B 679	42		P96-B*	25	N								P24-V*	25	N								
B 680	42		P96-C*	25	N								P24-U*	25	N								
B 681	42		P92-D	25	N								P24-G*	25	N								
B 682	42		P92-X	25	N								P24-JJ	25	N								
B 683	42		P34-B*	25	N								TB20- 40AB	16	N		107						
B 684	42		P34-C*	25	N								TB20- 40CD	16	N		107						
B 685	65			52		23	90	91	7					225		200	86	87	856				
B 685B	41		TB22- 37CD	16	N		107						SHLD B 685	25	N								
B 685E			P66-G1	11	N		89						TB22- 37AB	16	N		107						
B 685X			P66-G2										SHLD B 685										

1 THE STD CONDUCTOR TERMINATION FIGURES ARE PER
2 DIMENSIONS ARE IN INCHES AND TWO PLACE DECIMALS.

MANNED SPACECRAFT CENTER HOUSTON, TEXAS | SIZE A | 1900943

SCALE - NONE | REV LTR AR | SHEET 86 OF 188

MIL 2089 - 4-63 WIR

CONDUCTOR INDIVIDUAL LENGTH NUMBER	ITEM NO.	2	FROM CUT WIRE OR SHIELD STRIP WIRE OR JACKET CIRCUIT POINT	2	T I N	2	TERMINATION SPEC. 1 ITEM NO.					NO.	TO CUT WIRE OR SHIELD STRIP WIRE OR JACKET CIRCUIT POINT	2	T I N	2	TERMINATION SPEC 1 ITEM NO.					NO.
B 686	46			225		200	85		7					400		370	48	52	846				
B 686B	41		TB20- 49	16	N		107						SHLD B 686	25	N								
B 686L			P10-L	25	N								TB20- 50CD	16	N		107						
B 686R			P10-K	25	N								TB20- 50AB	16	N		107						
B 687	46			225		200	85		7					400		370	48	52	846				
B 687B	41		TB20- 52	16	N		107						SHLD B 687	25	N								
B 687L			P10-X	25	N								TB20- 53CD	16	N		107						
B 687R			P10-W	25	N								TB20- 53AB	16	N		107						
B 688	46			225		200	85		7					400		370	48	52	846				
B 688B	41		TB20- 55	16	N		107						SHLD B 688	25	N								
B 688L			P85-L	25	N								TB20- 56CD	16	N		107						
B 688R			P85-K	25	N								TB20- 56AB	16	N		107						
B 692	46			225		200	85		7					400		370	48	52	846				
B 692B	41		TB20- 58	16	N		107						SHLD B 692	25	N								
B 692L			P86-X	25	N								TB20- 59CD	16	N		107						
B 692R			P86-W	25	N								TB20- 59AB	16	N		107						
B 693			DELETED																				
B 693B			DELETED																				

1 THE STD CONDUCTOR TERMINATION FIGURES ARE PER
2 DIMENSIONS ARE IN INCHES AND TWO PLACE DECIMALS.

MANNED SPACECRAFT CENTER HOUSTON, TEXAS | SIZE A | 1900943

SCALE - NONE | REV LTR AR | SHEET 87 OF 188

MIL 2089 - 4-63 WIR

CONDUCTOR NUMBER	INDIVIDUAL LENGTH ITEM NO.	2	FROM CIRCUIT POINT	2	CUT WIRE OR SHIELD STRIP WIRE OR JACKET	TIN	2	TERMINATION SPEC. ITEM NO.	1	NO.	TO CIRCUIT POINT	2	CUT WIRE OR SHIELD STRIP WIRE OR JACKET	TIN	2	TERMINATION SPEC. ITEM NO.	1	NO.
B 693L			DELETED															
B 693R			DELETED															
B 694			DELETED															
B 694B			DELETED															
B 694L			DELETED															
B 694R			DELETED															
B 695			DELETED															
B 695B			DELETED															
B 695L			DELETED															
B 695R			DELETED															
B 696	65			52		23	90	91	7			225		200	86	87	856	
B 696B	41		P26-S	25N							SHLD B 696	25N						
B 696E			P93-F1	11N			89				P26-R	25N						
B 696X			P93-F2								SHLD B 696							
B 697	65			50		31			7			52		23	90	91	7	
B 697E			P56-H	11Y							P62-H1	11N			89			
B 697X			P56-L								P62-H2							
B 698	65			50		31			7			52		23	90	91	7	

1 THE STD CONDUCTOR TERMINATION FIGURES ARE PER
2 DIMENSIONS ARE IN INCHES AND TWO PLACE DECIMALS.

MANNED SPACECRAFT CENTER HOUSTON, TEXAS | SIZE A | 1900943
SCALE - NONE | REV LTR AR | SHEET 88 OF 188

MIL 2089 - 4-65 WIR

CONDUCTOR NUMBER	INDIVIDUAL LENGTH ITEM NO.	2	FROM CIRCUIT POINT	2	CUT WIRE OR SHIELD STRIP WIRE OR JACKET	TIN	2	TERMINATION SPEC. ITEM NO.	1	NO.	TO CIRCUIT POINT	2	CUT WIRE OR SHIELD STRIP WIRE OR JACKET	TIN	2	TERMINATION SPEC. ITEM NO.	1	NO.
B 698E			P55-H	11Y							P62-J1	11N			89			
B 698X			P55-L								P62-J2							
B 700B	41		TB22- 21	16N			107				SHLD B 700	25N						
B 700L			P85-T	25N							TB22- 22CD	16N			107			
B 700R			P85-S	25N							TB22- 22AB	16N			107			
B 701	46			225		200	85		7			400		370	48	52	846	
B 701B	41		TB18- 96	16N			107				SHLD B 701	25N						
B 701L			P85-N*	25N							TB18- 95CD	16N			107			
B 701R			P85-M*	25N							TB18- 95AB	16N			107			
B 702	46			225		200	85		7			400		370	48	52	846	
B 702B	41		TB22- 21	16N			107				SHLD B 702	25N						
B 702L			P84-T	25N							TB22- 20CD	16N			107			
B 702R			P84-S	25N							TB22- 20AB	16N			107			
B 703	46			225		200	85		7			400		370	48	52	846	
B 703B	41		TB18- 93	16N			107				SHLD B 703	25N						
B 703L			P84-N*	25N							TB18- 94CD	16N			107			
B 703R			P84-M*	25N							TB18- 94AB	16N			107			
B 704	46			225		200	85		7			400		370	48	52	846	

1 THE STD CONDUCTOR TERMINATION FIGURES ARE PER
2 DIMENSIONS ARE IN INCHES AND TWO PLACE DECIMALS.

MANNED SPACECRAFT CENTER HOUSTON, TEXAS | SIZE A | 1900943
SCALE - NONE | REV LTR AR | SHEET 89 OF 188

MIL 2089 - 4-65 WIR

CONDUCTOR NUMBER	INDIVIDUAL LENGTH ITEM NO.	2	FROM CIRCUIT POINT	2	CUT WIRE OR SHIELD STRIP WIRE OR JACKET	TIN	2	TERMINATION SPEC. ITEM NO.	1	NO.	TO CIRCUIT POINT	2	CUT WIRE OR SHIELD STRIP WIRE OR JACKET	TIN	2	TERMINATION SPEC. ITEM NO.	1	NO.
B 704B	41		TB22- 30	16N			107				SHLD B 704	25N						
B 704L			P84-G	25N							TB22- 29CD	16N			107			
B 704R			P84-F	25N							TB22- 29AB	16N			107			
B 705	46			225		200	85		7			400		370	48	52	846	
B 705B	41		TB22- 24	16N			107				SHLD B 705	25N						
B 705L			P 9-V	25N							TB22- 25CD	16N			107			
B 705R			P 9-U	25N							TB22- 25AB	16N			107			
B 706	46			225		200	85		7			400		370	48	52	846	
B 706B	41		TB18- 93	16N			107				SHLD B 706	25N						
B 706L			P 9-N*	25N							TB18- 92CD	16N			107			
B 706R			P 9-M*	25N							TB18- 92AB	16N			107			
B 707	46			225		200	85		7			400		370	48	52	846	
B 707B	41		TB22- 27	16N			107				SHLD B 707	25N						
B 707L			P 9-G	25N							TB22- 28CD	16N			107			
B 707R			P 9-F	25N							TB22- 28AB	16N			107			
B 708	46			225		200	85		7			400		370	48	52	846	
B 708B	41		TB22- 27	16N			107				SHLD B 708	25N						
B 708L			P86-G	25N							TB22- 26CD	16N			107			

1 THE STD CONDUCTOR TERMINATION FIGURES ARE PER
2 DIMENSIONS ARE IN INCHES AND TWO PLACE DECIMALS.

MANNED SPACECRAFT CENTER HOUSTON, TEXAS | SIZE A | 1900943
SCALE - NONE | REV LTR AR | SHEET 90 OF 188

MIL 2089 - 4-65 WIR

CONDUCTOR NUMBER	INDIVIDUAL LENGTH ITEM NO.	2	FROM CIRCUIT POINT	2	CUT WIRE OR SHIELD STRIP WIRE OR JACKET	TIN	2	TERMINATION SPEC. ITEM NO.	1	NO.	TO CIRCUIT POINT	2	CUT WIRE OR SHIELD STRIP WIRE OR JACKET	TIN	2	TERMINATION SPEC. ITEM NO.	1	NO.
B 708R			P86-F	25N							TB22- 26AB	16N			107			
B 709	46			225		200	85		7			400		370	48	52	846	
B 709B	41		TB22- 24	16N			107				SHLD B 709	25N						
B 709L			P86-V	25N							TB22- 25CD	16N			107			
B 709R			P86-U	25N							TB22- 23AB	16N			107			
B 710	46			225		200	85		7			400		370	48	52	846	
B 710B	41		TB18- 90	16N			107				SHLD B 710	25N						
B 710L			P86-N*	25N							TB18- 91CD	16N			107			
B 710R			P86-M*	25N							TB18- 91AB	16N			107			
B 711	65			52		23	90	91	7			52		23	90	91	7	
B 711E			P93-B1	11N			89				P 7-DOH	11N			89			
B 711X			P93-B2								P 7-DOL							
B 712	42		P64-GG	25N							P 5-K*	25N						
B 713	65			225		200	86	87	856			52		23	90	91	7	
B 713A	41		SHLD B 713	25N							P63-CC	25N						
B 713E			P63-DD	25N							P 7-FOH	11N			89			
B 713X			SHLD B 713								P 7-FOL							
B 714	65			52		23	90	91	7			52		23	90	91	7	

1 THE STD CONDUCTOR TERMINATION FIGURES ARE PER
2 DIMENSIONS ARE IN INCHES AND TWO PLACE DECIMALS.

MANNED SPACECRAFT CENTER HOUSTON, TEXAS | SIZE A | 1900943
SCALE - NONE | REV LTR AR | SHEET 91 OF 188

MIL 2089 - 4-65 WIR

CONDUCTOR INDIVIDUAL LENGTH NUMBER	ITEM NO.	2	FROM CUT WIRE OR SHIELD STRIP WIRE OR JACKET CIRCUIT POINT	2	TIN	2	TERMINATION SPEC. ITEM NO.	1	NO.	TO CUT WIRE OR SHIELD STRIP WIRE OR JACKET CIRCUIT POINT	2	TIN	2	TERMINATION SPEC ITEM NO.	1	NO.
B 714E			P69-A1	11	N		89			P 7-A0H	11	N		89		
B 714X			P69-A2							P 7-A0L						
B 715	65			52		23	90 91	7			52		23	90 91	7	
B 715E			P93-A1	11	N		89			P 7-B0H	11	N		89		
B 715X			P93-A2							P 7-B0L						
B 716	42		P64-V*	25	N					P 5-FF	25	N				
B 717	42		P64-W*	25	N					P 5-CC	25	N				
B 718	42		P64-X*	25	N					P 5-DD	25	N				
B 719	42		P64-Y*	25	N					P 5-W*	25	N				
B 720	42		P64-Z*	25	N					P 5-Y*	25	N				
B 721	42		P64-AA	25	N					P 5-AA	25	N				
B 722	42		P36-FF	25	N					TB20- 8AB	16	N		107		
B 723	42		P36-KK	25	N					TB21- 8AB	16	N		107		
B 724	42		P36-HH	25	N					TB21- 7AB	16	N		107		
B 725	41		P82-P	25	N					J 3-M*	25	N				
B 726	41		P82-R	25	N					J 3-Z*	25	N				
B 727	41		P82-S	25	N					J 3-Y*	25	N				
B 728	41		P82-T	25	N					J 3-X*	25	N				

1 THE STD CONDUCTOR TERMINATION FIGURES ARE PER
2 DIMENSIONS ARE IN INCHES AND TWO PLACE DECIMALS.

MANNED SPACECRAFT CENTER HOUSTON, TEXAS | SIZE A | 1900943

SCALE - NONE | REV LTR AR | SHEET 92 OF 188

MIL 2089 - 4-63 WIN

CONDUCTOR INDIVIDUAL LENGTH NUMBER	ITEM NO.	2	FROM CUT WIRE OR SHIELD STRIP WIRE OR JACKET CIRCUIT POINT	2	TIN	2	TERMINATION SPEC. ITEM NO.	1	NO.	TO CUT WIRE OR SHIELD STRIP WIRE OR JACKET CIRCUIT POINT	2	TIN	2	TERMINATION SPEC ITEM NO.	1	NO.
B 729	41		P82-U	25	N					J 3-J*	25	N				
B 730	41		P82-V	25	N					J 3-I*	25	N				
B 731	41		P82-W	25	N					J 3-H*	25	N				
B 732	41		P82-X	25	N					J 3-G*	25	N				
B 734	46			225		200	85	7			400		370	48 52	846	
B 734B	41		TB20- 67	16	N		107			SHLD B 734	25	N				
B 734L			P85-V	25	N					TB20- 66CD	16	N		107		
B 734R			P85-U	25	N					TB20- 66AB	16	N		107		
B 735	46			225		200	85	7			400		370	48 52	846	
B 735B	41		TB20- 64	16	N		107			SHLD B 735	25	N				
B 735L			P84-X	25	N					TB20- 65CD	16	N		107		
B 735R			P84-W	25	N					TB20- 65AB	16	N		107		
B 736	46			225		200	85	7			400		370	48 52	846	
B 736B	41		TB20- 61	16	N		107			SHLD B 736	25	N				
B 736L			P 9-X	25	N					TB20- 62CD	16	N		107		
B 736R			P 9-W	25	N					TB20- 62AB	16	N		107		
B 737	46			225		200	85	7			400		370	48 52	846	
B 737B	41		TB20- 61	16	N		107			SHLD B 737	25	N				

1 THE STD CONDUCTOR TERMINATION FIGURES ARE PER
2 DIMENSIONS ARE IN INCHES AND TWO PLACE DECIMALS.

MANNED SPACECRAFT CENTER HOUSTON, TEXAS | SIZE A | 1900943

SCALE - NONE | REV LTR AR | SHEET 93 OF 188

MIL 2089 - 4-63 WIN

CONDUCTOR INDIVIDUAL LENGTH NUMBER	ITEM NO.	2	FROM CUT WIRE OR SHIELD STRIP WIRE OR JACKET CIRCUIT POINT	2	TIN	2	TERMINATION SPEC. ITEM NO.	1	NO.	TO CUT WIRE OR SHIELD STRIP WIRE OR JACKET CIRCUIT POINT	2	TIN	2	TERMINATION SPEC ITEM NO.	1	NO.
B 737L			P83-X	25	N					TB20- 60CD	16	N		107		
B 737R			P83-W	25	N					TB20- 60AB	16	N		107		
B 738	41		TB23- 10	20	N		111			P16-T*	25	N				
B 739	41		TB23- 10	20	N		111			P15-T*	25	N				
B 740	41		TB23- 10	20	N		111			P14-T*	25	N				
B 741	41		TB23- 11	20	N		111			P17-T*	25	N				
B 742	46			225		200	85	7			400		370	48 52	846	
B 742B	41		TB19- 82	16	N		107			SHLD B 742	25	N				
B 742L			P85-N	25	N					TB19- 83CD	16	N		107		
B 742R			P85-M	25	N					TB19- 83AB	16	N		107		
B 743	46			225		200	85	7			400		370	48 52	846	
B 743B	41		TB19- 85	16	N		107			SHLD B 743	25	N				
B 743L			P85-E*	25	N					TB19- 86CD	16	N		107		
B 743R			P85-D*	25	N					TB19- 86AB	16	N		107		
B 744	46			225		200	85	7			400		370	48 52	846	
B 744B	41		TB19- 88	16	N		107			SHLD B 744	25	N				
B 744L			P85-G*	25	N					TB19- 87CD	16	N		107		
B 744R			P85-F*	25	N					TB19- 87AB	16	N		107		

1 THE STD CONDUCTOR TERMINATION FIGURES ARE PER
2 DIMENSIONS ARE IN INCHES AND TWO PLACE DECIMALS.

MANNED SPACECRAFT CENTER HOUSTON, TEXAS | SIZE A | 1900943

SCALE - NONE | REV LTR AR | SHEET 94 OF 188

MIL 2089 - 4-63 WIN

CONDUCTOR INDIVIDUAL LENGTH NUMBER	ITEM NO.	2	FROM CUT WIRE OR SHIELD STRIP WIRE OR JACKET CIRCUIT POINT	2	TIN	2	TERMINATION SPEC. ITEM NO.	1	NO.	TO CUT WIRE OR SHIELD STRIP WIRE OR JACKET CIRCUIT POINT	2	TIN	2	TERMINATION SPEC ITEM NO.	1	NO.
B 746	46			225		200	85	7			400		370	48 52	846	
B 746B	41		TB19- 85	16	N		107			SHLD B 746	25	N				
B 746L			P 9-R*	25	N					TB19- 84CD	16	N		107		
B 746R			P 9-P*	25	N					TB19- 84AB	16	N		107		
B 747	46			225		200	85	7			400		370	48 52	846	
B 747B	41		TB19- 88	16	N		107			SHLD B 747	25	N				
B 747L			P83-EE	25	N					TB19- 89CD	16	N		107		
B 747R			P83-DD	25	N					TB19- 89AB	16	N		107		
B 748	46			225		200	85	7			400		370	48 52	846	
B 748B	41		TB22- 30	16	N		107			SHLD B 748	25	N				
B 748L			P84-C	25	N					TB22- 31CD	16	N		107		
B 748R			P84-B	25	N					TB22- 31AB	16	N		107		
B 749	46			225		200	85	7			400		370	48 52	846	
B 749B	41		TB22- 33	16	N		107			SHLD B 749	25	N				
B 749L			P 9-C	25	N					TB22- 32CD	16	N		107		
B 749R			P 9-B	25	N					TB22- 32AB	16	N		107		
B 750	46			225		200	85	7			400		370	48 52	846	
B 750B	41		TB22- 33	16	N		107			SHLD B 750	25	N				

1 THE STD CONDUCTOR TERMINATION FIGURES ARE PER
2 DIMENSIONS ARE IN INCHES AND TWO PLACE DECIMALS.

MANNED SPACECRAFT CENTER HOUSTON, TEXAS | SIZE A | 1900943

SCALE - NONE | REV LTR AR | SHEET 95 OF 188

MIL 2089 - 4-63 WIN

CONDUCTOR NUMBER	INDIVIDUAL LENGTH ITEM NO.	2	FROM CUT WIRE OR SHIELD STRIP WIRE OR JACKET CIRCUIT POINT	2	TYPE	2	TERMINATION SPEC. 1 ITEM NO.				NO.	TO CUT WIRE OR SHIELD STRIP WIRE OR JACKET CIRCUIT POINT	2	TYPE	2	TERMINATION SPEC. 1 ITEM NO.				NO.
B 750L			P86-C	25	N							TB22- 34CD	16	N		107					
B 750R			P86-B	25	N							TB22- 34AB	16	N		107					
B 751	46			225		200	85			7			400		370	48	52	846			
B 751B	41		TB22- 39	16	N		107					SHLD B 751	25	N							
B 751L			P86-J	25	N							TB22- 38CD	16	N		107					
B 751R			P86-H	25	N							TB22- 38AB	16	N		107					
B 753	42		P96-Y	25	N							TB21- 5CD	16	N		107					
B 754	46			225		200	85			7			400		370	48	52	846			
B 754B	41		TB21- 49	16	N		107					SHLD B 754	25	N							
B 754L			P84-C*	25	N							TB21- 50	16	N		107					
B 754R			P84-B*	25	N							TB21- 51	16	N		107					
B 755	46			225		200	85			7			400		370	48	52	846			
B 755B	41		TB21- 55	16	N		107					SHLD B 755	25	N							
B 755L			P 9-C*	25	N							TB21- 53	16	N		107					
B 755R			P 9-B*	25	N							TB21- 54	16	N		107					
B 756	46			225		200	85			7			400		370	48	52	846			
B 756B	41		TB21- 55	16	N		107					SHLD B 756	25	N							
B 756L			P83-C	25	N							TB21- 56	16	N		107					

1 THE STD CONDUCTOR TERMINATION FIGURES ARE PER
2 DIMENSIONS ARE IN INCHES AND TWO PLACE DECIMALS.

MANNED SPACECRAFT CENTER HOUSTON, TEXAS | SIZE A | 1900943
SCALE - NONE | REV LTR AR | SHEET 96 OF 188

MIL 2089 - 4-63 WIR

CONDUCTOR NUMBER	INDIVIDUAL LENGTH ITEM NO.	2	FROM CUT WIRE OR SHIELD STRIP WIRE OR JACKET CIRCUIT POINT	2	TYPE	2	TERMINATION SPEC. 1 ITEM NO.				NO.	TO CUT WIRE OR SHIELD STRIP WIRE OR JACKET CIRCUIT POINT	2	TYPE	2	TERMINATION SPEC. 1 ITEM NO.				NO.
B 756R			P83-B	25	N							TB21- 57	16	N		107					
B 757	46			225		200	85			7			400		370	48	52	846			
B 757B	41		TB21- 58	16	N		107					SHLD B 757	25	N							
B 757L			P83-N	25	N							TB21- 59CD	16	N		107					
B 757R			P83-M	25	N							TB21- 59AB	16	N		107					
B 758	46			225		200	85			7			225		200	48	52	845			
B 758B	41		E 33	25	N							SHLD B 758	25	N							
B 758L			P 3-C	25	N							P91-K*	25	N							
B 758R			P 3-F	25	N							P91-K	25	N							
B 759	46			225		200	85			7			225		200	48	52	845			
B 759B	41		E 33	25	N							SHLD B 759	25	N							
B 759L			P 3-R	25	N							P91-N*	25	N							
B 759R			P 3-G	25	N							P91-N	25	N							
B 760	46			225		200	85			7			225		200	48	52	845			
B 760B	41		E 33	25	N							SHLD B 760	25	N							
B 760L			P 3-U	25	N							P91-R*	25	N							
B 760R			P 3-K	25	N							P91-R	25	N							
B 761	40		P 8-A	25	N							TB25- 2	20	N		111					

1 THE STD CONDUCTOR TERMINATION FIGURES ARE PER
2 DIMENSIONS ARE IN INCHES AND TWO PLACE DECIMALS.

MANNED SPACECRAFT CENTER HOUSTON, TEXAS | SIZE A | 1900943
SCALE - NONE | REV LTR AR | SHEET 97 OF 188

MIL 2089 - 4-63 WIR

CONDUCTOR NUMBER	INDIVIDUAL LENGTH ITEM NO.	2	FROM CUT WIRE OR SHIELD STRIP WIRE OR JACKET CIRCUIT POINT	2	TYPE	2	TERMINATION SPEC. 1 ITEM NO.				NO.	TO CUT WIRE OR SHIELD STRIP WIRE OR JACKET CIRCUIT POINT	2	TYPE	2	TERMINATION SPEC. 1 ITEM NO.				NO.
B 762	46			225		200	85			7			400		370	48	52	845			
B 762B	41		TB20- 18	16	N		107					SHLD B 762	25	N							
B 762L			P22-M	25	N							TB20- 17CD	16	N		107					
B 762R			P22-L	25	N							TB20- 17AB	16	N		107					
B 763	65			52		23	90	91		7			225		200	86	87	856			
B 763B	41		TB22- 19CD	16	N		107					SHLD B 763	25	N							
B 763E			P66-F1	11	N		89					TB22- 19AB	16	N		107					
B 763X			P66-F2									SHLD B 763									
B 764	46			225		200	85			7			400		370	48	52	846			
B 764B	41		TB20- 69	16	N		107					SHLD B 764	25	N							
B 764L			P 9-E*	25	N							TB20- 70	16	N		107					
B 764R			P 9-D*	25	N							TB20- 71	16	N		107					
B 765	46			225		200	85			7			400		370	48	52	846			
B 765B	41		TB20- 77	16	N		107					SHLD B 765	25	N							
B 765L			P86-C*	25	N							TB20- 78	16	N		107					
B 765R			P86-B*	25	N							TB20- 79	16	N		107					
B 766	46			225		200	85			7			400		370	48	52	846			
B 766B	41		TB20- 75	16	N		107					SHLD B 766	25	N							

1 THE STD CONDUCTOR TERMINATION FIGURES ARE PER
2 DIMENSIONS ARE IN INCHES AND TWO PLACE DECIMALS.

MANNED SPACECRAFT CENTER HOUSTON, TEXAS | SIZE A | 1900943
SCALE - NONE | REV LTR AR | SHEET 98 OF 188

MIL 2089 - 4-63 WIR

CONDUCTOR NUMBER	INDIVIDUAL LENGTH ITEM NO.	2	FROM CUT WIRE OR SHIELD STRIP WIRE OR JACKET CIRCUIT POINT	2	TYPE	2	TERMINATION SPEC. 1 ITEM NO.				NO.	TO CUT WIRE OR SHIELD STRIP WIRE OR JACKET CIRCUIT POINT	2	TYPE	2	TERMINATION SPEC. 1 ITEM NO.				NO.
B 766L			P86-E*	25	N							TB20- 74CD	16	N		107					
B 766R			P86-D*	25	N							TB20- 74AB	16	N		107					
B 767	46			225		200	85			7			400		370	48	52	846			
B 767B	41		TB19- 97	16	N		107					SHLD B 767	25	N							
B 767L			P85-EE	25	N							TB19- 96CD	16	N		107					
B 767R			P85-DD	25	N							TB19- 96AB	16	N		107					
B 768	46			225		200	85			7			400		370	48	52	846			
B 768B	41		TB19- 94	16	N		107					SHLD B 768	25	N							
B 768L			P84-EE	25	N							TB19- 95CD	16	N		107					
B 768R			P84-DD	25	N							TB19- 95AB	16	N		107					
B 769	46			225		200	85			7			400		370	48	52	846			
B 769B	41		TB19- 94	16	N		107					SHLD B 769	25	N							
B 769L			P 9-EE	25	N							TB19- 93CD	16	N		107					
B 769R			P 9-DD	25	N							TB19- 93AB	16	N		107					
B 770	46			225		200	85			7			400		370	48	52	846			
B 770B	41		TB19- 91	16	N		107					SHLD B 770	25	N							
B 770L			P83-JJ	25	N							TB19- 90CD	16	N		107					
B 770R			P83-HH	25	N							TB19- 90AB	16	N		107					

1 THE STD CONDUCTOR TERMINATION FIGURES ARE PER
2 DIMENSIONS ARE IN INCHES AND TWO PLACE DECIMALS.

MANNED SPACECRAFT CENTER HOUSTON, TEXAS | SIZE A | 1900943
SCALE - NONE | REV LTR AR | SHEET 99 OF 188

MIL 2089 - 4-63 WIR

CONDUCTOR NUMBER	ITEM NO.	FROM CUT WIRE OR SHIELD / STRIP WIRE OR JACKET / CIRCUIT POINT	TYPE	TERMINATION SPEC.	ITEM NO.	NO.	TO CUT WIRE OR SHIELD / STRIP WIRE OR JACKET / CIRCUIT POINT	TYPE	TERMINATION SPEC.	ITEM NO.	NO.
B 771	46		225	200 85	7			400	370 48 52 846		
B 771B	41	TB19- 91	16N	107			SHLD B 771	25N			
B 771L		P86-EE	25N				TB19- 92CD	16N	107		
B 771R		P86-DD	25N				TB19- 92AB	16N	107		
B 772	46		225	200 85	7			400	370 48 52 846		
B 772B	41	TB22- 36	16N	107			SHLD B 772	25N			
B 772L		P10-C	25N				TB22- 35CD	16N	107		
B 772R		P10-B	25N				TB22- 35AB	16N	107		
B 773	46		225	200 85	7			400	370 48 52 846		
B 773B	41	TB21- 67	16N	107			SHLD B 773	25N			
B 773L		P10-E	25N				TB21- 68CD	16N	107		
B 773R		P10-D	25N				TB21- 68AB	16N	107		
B 774	46		225	200 85	7			400	370 48 52 846		
B 774B	41	TB21- 70	16N	107			SHLD B 774	25N			
B 774L		P85-C	25N				TB21- 69CD	16N	107		
B 774R		P85-B	25N				TB21- 69AB	16N	107		
B 775	46		225	200 85	7			400	370 48 52 846		
B 775B	41	TB21- 61	16N	107			SHLD B 775	25N			

1 THE STD CONDUCTOR TERMINATION FIGURES ARE PER
2 DIMENSIONS ARE IN INCHES AND TWO PLACE DECIMALS.

MANNED SPACECRAFT CENTER HOUSTON, TEXAS | SIZE A | 1900943
SCALE - NONE | REV LTR AR | SHEET 100 OF 188

MIL 2089 - 4.63 WIR

CONDUCTOR NUMBER	ITEM NO.	FROM CUT WIRE OR SHIELD / STRIP WIRE OR JACKET / CIRCUIT POINT	TYPE	TERMINATION SPEC.	ITEM NO.	NO.	TO CUT WIRE OR SHIELD / STRIP WIRE OR JACKET / CIRCUIT POINT	TYPE	TERMINATION SPEC.	ITEM NO.	NO.
B 775L		P86-R	25N				TB21- 60CD	16N	107		
B 775R		P86-P	25N				TB21- 60AB	16N	107		
B 776	46		225	200 85	7			400	370 48 52 846		
B 776B	41	TB21- 64	16N	107			SHLD B 776	25N			
B 776L		P86-T	25N				TB21- 65CD	16N	107		
B 776R		P86-S	25N				TB21- 65AB	16N	107		
B 777	46		225	200 85	7			400	370 48 52 846		
B 777B	41	TB21- 61	16N	107			SHLD B 777	25N			
B 777L		P83-E	25N				TB21- 62CD	16N	107		
B 777R		P83-D	25N				TB21- 62AB	16N	107		
B 778	46		225	200 85	7			400	370 48 52 846		
B 778B	41	TB21- 64	16N	107			SHLD B 778	25N			
B 778L		P83-T	25N				TB21- 63CD	16N	107		
B 778R		P83-S	25N				TB21- 63AB	16N	107		
B 779	46		225	200 85	7			400	370 48 52 846		
B 779B	41	TB20- 85	16N	107			SHLD B 779	25N			
B 779L		P84-R	25N				TB20- 86CD	16N	107		
B 779R		P84-P	25N				TB20- 86AB	16N	107		

1 THE STD CONDUCTOR TERMINATION FIGURES ARE PER
2 DIMENSIONS ARE IN INCHES AND TWO PLACE DECIMALS.

MANNED SPACECRAFT CENTER HOUSTON, TEXAS | SIZE A | 1900943
SCALE - NONE | REV LTR AR | SHEET 101 OF 188

MIL 2089 - 4.63 WIR

CONDUCTOR NUMBER	ITEM NO.	FROM CUT WIRE OR SHIELD / STRIP WIRE OR JACKET / CIRCUIT POINT	TYPE	TERMINATION SPEC.	ITEM NO.	NO.	TO CUT WIRE OR SHIELD / STRIP WIRE OR JACKET / CIRCUIT POINT	TYPE	TERMINATION SPEC.	ITEM NO.	NO.
B 780	46		225	200 85	7			400	370 48 52 846		
B 780B	41	TB20- 88	16N	107			SHLD B 780	25N			
B 780L		P84-E*	25N				TB20- 89CD	16N	107		
B 780R		P84-D*	25N				TB20- 89AB	16N	107		
B 781	46		225	200 85	7			400	370 48 52 846		
B 781B	41	TB20- 88	16N	107			SHLD B 781	25N			
B 781L		P86-R*	25N				TB20- 87CD	16N	107		
B 781R		P86-P*	25N				TB20- 87AB	16N	107		
B 782	42	P99-C	25N				TB22- 40AB	16N	107		
B 783	42	P11-A	25N				J19-T	25N			
B 784	42	P11-B	25N				J19-P*	25N			
B 785	42	P11-C	25N				J19-N*	25N			
B 786	42	P11-J	25N				J19-G*	25N			
B 787		DELETED									
B 788		DELETED									
B 789	42	P11-H	25N				J19-H*	25N			
B 790		DELETED									
B 791		DELETED									

1 THE STD CONDUCTOR TERMINATION FIGURES ARE PER
2 DIMENSIONS ARE IN INCHES AND TWO PLACE DECIMALS.

MANNED SPACECRAFT CENTER HOUSTON, TEXAS | SIZE A | 1900943
SCALE - NONE | REV LTR AR | SHEET 102 OF 188

MIL 2089 - 4.63 WIR

CONDUCTOR NUMBER	ITEM NO.	FROM CUT WIRE OR SHIELD / STRIP WIRE OR JACKET / CIRCUIT POINT	TYPE	TERMINATION SPEC.	ITEM NO.	NO.	TO CUT WIRE OR SHIELD / STRIP WIRE OR JACKET / CIRCUIT POINT	TYPE	TERMINATION SPEC.	ITEM NO.	NO.
B 794	42	P11-F	25N				J19-Z	25N			
B 795	42	P11-G	25N				J19-A*	25N			
B 796	42	P11-K	25N				J19-B*	25N			
B 797	46		225	200 85				225	200 48 52 845		
B 797B	41	E 38	25N				SHLD B 797	25N			
B 797L		P71-K	25N				P65-N*	25N			
B 797R		P71-J	25N				P65-N	25N			
B 798	46		225	200 85				225	200 48 52 845		
B 798B	41	E 38	25N				SHLD B 798	25N			
B 798L		P71-M	25N				P65-P*	25N			
B 798R		P71-L	25N				P65-P	25N			
B 799	41	P71-B	25N				P63-C	25N			
B 800	41	P71-C	25N				P63-V*	25N			
B 801	41	P71-E	25N				P63-U*	25N			
B 802	41	P71-F	25N				P63-T*	25N			
B 803	41	P71-G	25N				P63-S*	25N			
B 804	41	P71-P	25N				P63-R*	25N			
B 805	41	P71-R	25N				P63-Q*	25N			

1 THE STD CONDUCTOR TERMINATION FIGURES ARE PER
2 DIMENSIONS ARE IN INCHES AND TWO PLACE DECIMALS.

MANNED SPACECRAFT CENTER HOUSTON, TEXAS | SIZE A | 1900943
SCALE - NONE | REV LTR AR | SHEET 103 OF 188

MIL 2089 - 4.63 WIR

GMI WIRING HARNESS B AR 1900943

CONDUCTOR INDIVIDUAL LENGTH NUMBER	ITEM NO.	2	FROM CUT WIRE OR SHIELD STRIP WIRE OR JACKET CIRCUIT POINT	2	TYPE 2	TERMINATION SPEC 1 ITEM NO.	NO.	TO CUT WIRE OR SHIELD STRIP WIRE OR JACKET CIRCUIT POINT	2	TYPE 2	TERMINATION SPEC 1 ITEM NO.	NO.
B 806	41		P71-S	25N				P63-P*	25N			
B 807	41		P71-T	25N				P63-N*	25N			
B 808	41		P71-U	25N				P63-M*	25N			
B 809	41		P71-V	25N				P63-K*	25N			
B 810	41		P71-W	25N				P63-J*	25N			
B 811	41		P71-Y	25N				P63-D	25N			
B 812	41		P71-Z	25N				P63-B	25N			
B 813	41		P71-A*	25N				P63-E	25N			
B 814	41		P71-B*	25N				P63-F	25N			
B 815	41		P71-G*	25N				P63-G	25N			
B 816	41		P71-H*	25N				P63-H	25N			
B 817	41		P71-I*	25N				P63-J	25N			
B 818	41		P71-J*	25N				P63-K	25N			
B 819	41		P71-K*	25N				P63-L	25N			
B 820	41		P71-M*	25N				P63-M	25N			
B 821	41		P71-N*	25N				P63-N	25N			
B 822	41		P71-R*	25N				P63-P	25N			
B 823	41		P71-E*	25N				P65-DD	25N			

1 THE STD CONDUCTOR TERMINATION FIGURES ARE PER
2 DIMENSIONS ARE IN INCHES AND TWO PLACE DECIMALS.

MANNED SPACECRAFT CENTER HOUSTON, TEXAS | SIZE A | 1900943
SCALE-NONE | REV LTR AR | SHEET 104 OF 188

MIL 2069 - 4-63 WIR

GMI WIRING HARNESS B AR 1900943

CONDUCTOR INDIVIDUAL LENGTH NUMBER	ITEM NO.	2	FROM CUT WIRE OR SHIELD STRIP WIRE OR JACKET CIRCUIT POINT	2	TYPE 2	TERMINATION SPEC 1 ITEM NO.	NO.	TO CUT WIRE OR SHIELD STRIP WIRE OR JACKET CIRCUIT POINT	2	TYPE 2	TERMINATION SPEC 1 ITEM NO.	NO.
B 824	41		P71-D*	25N				P65-EE	25N			
B 825	46			225	200	85	7		400	370	48 52 846	
B 825B	41		TB22- 55	16N	107			SHLD B 825	25N			
B 825L			P84-J	25N				TB22- 54CD	16N	107		
B 825R			P84-H	25N				TB22- 54AB	16N	107		
B 826	46			225	200	85	7		400	370	48 52 846	
B 826B	41		TB22- 52	16N	107			SHLD B 826	25N			
B 826L			P 9-J	25N				TB22- 51CD	16N	107		
B 826R			P 9-H	25N				TB22- 51AB	16N	107		
B 827	46			225	200	85	7		400	370	48 52 846	
B 827B	41		TB22- 58	16N	107			SHLD B 827	25N			
B 827L			P86-E	25N				TB22- 59CD	16N	107		
B 827R			P86-D	25N				TB22- 59AB	16N	107		
B 828	46			225	200	85	7		400	370	48 52 846	
B 828B	41		TB22- 58	16N	107			SHLD B 828	25N			
B 828L			P86-N	25N				TB22- 57CD	16N	107		
B 828R			P86-M	25N				TB22- 57AB	16N	107		
B 829	45			225	200	85			400	370	85	

1 THE STD CONDUCTOR TERMINATION FIGURES ARE PER
2 DIMENSIONS ARE IN INCHES AND TWO PLACE DECIMALS.

MANNED SPACECRAFT CENTER HOUSTON, TEXAS | SIZE A | 1900943
SCALE-NONE | REV LTR AR | SHEET 105 OF 188

MIL 2069 - 4-63 WIR

GMI WIRING HARNESS B AR 1900943

CONDUCTOR INDIVIDUAL LENGTH NUMBER	ITEM NO.	2	FROM CUT WIRE OR SHIELD STRIP WIRE OR JACKET CIRCUIT POINT	2	TYPE 2	TERMINATION SPEC 1 ITEM NO.	NO.	TO CUT WIRE OR SHIELD STRIP WIRE OR JACKET CIRCUIT POINT	2	TYPE 2	TERMINATION SPEC 1 ITEM NO.	NO.
B 829B	41		TB19- 15	16N	107			SHLD B 829	25N			
B 829L			P21-G*	25N				TB19- 16CD	16N	107		
B 829R			P21-F*	25N				TB19- 16AB	16N	107		
B 830	42		P32-Q*	25N				TB21- 47CD	16N	107		
B 831	42		P32-R*	25N				TB21- 60AB	16N	107		
B 832	42		P32-N*	25N				TB21- 47AB	16N	107		
B 833	12											
B 833L			P32-T	25N				TB21- 65CD	16N	107		
B 833R			P32-S	25N				TB21- 65AB	16N	107		
B 834	12											
B 834L			P32-V	25N				TB21- 62CD	16N	107		
B 834R			P32-U	25N				TB21- 62AB	16N	107		
B 838	42		P37-C	25N				J19-C*	25N			
B 839			DELETED									
B 840			DELETED									
B 842			DELETED									
B 843			DELETED									
B 844	46			225	200	85	7		400	370	48 52 846	

1 THE STD CONDUCTOR TERMINATION FIGURES ARE PER
2 DIMENSIONS ARE IN INCHES AND TWO PLACE DECIMALS.

MANNED SPACECRAFT CENTER HOUSTON, TEXAS | SIZE A | 1900943
SCALE-NONE | REV LTR AR | SHEET 106 OF 188

MIL 2069 - 4-63 WIR

GMI WIRING HARNESS B AR 1900943

CONDUCTOR INDIVIDUAL LENGTH NUMBER	ITEM NO.	2	FROM CUT WIRE OR SHIELD STRIP WIRE OR JACKET CIRCUIT POINT	2	TYPE 2	TERMINATION SPEC 1 ITEM NO.	NO.	TO CUT WIRE OR SHIELD STRIP WIRE OR JACKET CIRCUIT POINT	2	TYPE 2	TERMINATION SPEC 1 ITEM NO.	NO.
B 844B	41		TB21- 76	16N	107			SHLD B 844	25N			
B 844L			P10-N	25N				TB21- 74	16N	107		
B 844R			P10-M	25N				TB21- 75	16N	107		
B 845	46			225	200	85	7		400	370	48 52 846	
B 845B	41		TB21- 73	16N	107			SHLD B 845	25N			
B 845L			P10-R	25N				TB21- 71	16N	107		
B 845R			P10-P	25N				TB21- 72	16N	107		
B 846	46			225	200	85	7		400	370	48 52 846	
B 846B	41		TB21- 78	16N	107			SHLD B 846	25N			
B 846L			P85-E	25N				TB21- 77CD	16N	107		
B 846R			P85-D	25N				TB21- 77AB	16N	107		
B 847	46			225	200	85	7		400	370	48 52 846	
B 847B	41		TB18- 78	16N	107			SHLD B 847	25N			
B 847L			P84-T*	25N				TB18- 79CD	16N	107		
B 847R			P84-S*	25N				TB18- 79AB	16N	107		
B 848	42		P35-D*	25N				TB22- 2AB	16N	107		
B 849	40		P42-A	25N				TB25- 5	20N	111		
B 850	40		P44-A	25N				TB25- 6	20N	111		

1 THE STD CONDUCTOR TERMINATION FIGURES ARE PER
2 DIMENSIONS ARE IN INCHES AND TWO PLACE DECIMALS.

MANNED SPACECRAFT CENTER HOUSTON, TEXAS | SIZE A | 1900943
SCALE-NONE | REV LTR AR | SHEET 107 OF 188

MIL 2069 - 4-63 WIR

CONDUCTOR INDIVIDUAL LENGTH NUMBER	ITEM NO.	2	FROM CUT WIRE OR SHIELD STRIP WIRE OR JACKET CIRCUIT POINT	2	TIN	2	TERMINATION SPEC. 1 ITEM NO.					NO.	TO CUT WIRE OR SHIELD STRIP WIRE OR JACKET CIRCUIT POINT	2	TIN	2	TERMINATION SPEC. 1 ITEM NO.					NO.
B 851	46			225		200	85			7				400		370	48	52	846				
B 851B	41		TB20- 94	16N			107						SHLD B 851	25N									
B 851L			P84-V	25N									TB20- 95CD	16N			107						
B 851R			P84-U	25N									TB20- 95AB	16N			107						
B 852	46			225		200	85			7				400		370	48	52	846				
B 852B	41		TB20- 91	16N			107						SHLD B 852	25N									
B 852L			P84-G*	25N									TB20- 90CD	16N			107						
B 852R			P84-F*	25N									TB20- 90AB	16N			107						
B 853	46			225		200	85			7				400		370	48	52	846				
B 853B	41		TB20- 94	16N			107						SHLD B 853	25N									
B 853L			P83-J	25N									TB20- 93CD	16N			107						
B 853R			P83-H	25N									TB20- 93AB	16N			107						
B 854	46			225		200	85			7				400		370	48	52	846				
B 854B	41		TB20- 97	16N			107						SHLD B 854	25N									
B 854L			P83-X*	25N									TB20- 96CD	16N			107						
B 854R			P83-W*	25N									TB20- 96AB	16N			107						
B 855	46			225		200	85			7				400		370	48	52	846				
B 855B	41		TB20- 91	16N			107						SHLD B 855	25N									

1 THE STD CONDUCTOR TERMINATION FIGURES ARE PER
2 DIMENSIONS ARE IN INCHES AND TWO PLACE DECIMALS.

MANNED SPACECRAFT CENTER HOUSTON, TEXAS | SIZE A | 1900943

SCALE - NONE | REV LTR AR | SHEET 108 OF 188

MIL 2089 - 4-63 WIR

CONDUCTOR INDIVIDUAL LENGTH NUMBER	ITEM NO.	2	FROM CUT WIRE OR SHIELD STRIP WIRE OR JACKET CIRCUIT POINT	2	TIN	2	TERMINATION SPEC. 1 ITEM NO.					NO.	TO CUT WIRE OR SHIELD STRIP WIRE OR JACKET CIRCUIT POINT	2	TIN	2	TERMINATION SPEC. 1 ITEM NO.					NO.
B 855L			P83-V	25N									TB20- 92CD	16N			107						
B 855R			P83-U	25N									TB20- 92AB	16N			107						
B 856	41		P17-A	25N									TB25- 11	20N			111						
B 857	46			225		200	85			7				400		370	48	52	846				
B 857B	41		TB19- 24	16N			107						SHLD B 857	25N									
B 857L			P29-C	25N									TB19- 25CD	16N			107						
B 857R			P29-B	25N									TB19- 25AB	16N			107						
B 858	46			225		200	85			7				400		370	48	52	846				
B 858B	41		TB18- 9	16N			107						SHLD B 858	25N									
B 858L			P29-G	25N									TB18- 8CD	16N			107						
B 858R			P29-F	25N									TB18- 8AB	16N			107						
B 859	46			225		200	48	52	845					225		200	85			7			
B 859A	41		SHLD B 859	25N									E 38	25N									
B 859L			P65-H*	25N									P28-C	25N									
B 859R			P65-H	25N									P28-B	25N									
B 860	46			225		200	85			7				400		370	48	52	846				
B 860B	41		TB22- 64	16N			107						SHLD B 860	25N									
B 860L			P84-E	25N									TB22- 65CD	16N			107						

1 THE STD CONDUCTOR TERMINATION FIGURES ARE PER
2 DIMENSIONS ARE IN INCHES AND TWO PLACE DECIMALS.

MANNED SPACECRAFT CENTER HOUSTON, TEXAS | SIZE A | 1900943

SCALE - NONE | REV LTR AR | SHEET 109 OF 188

MIL 2089 - 4-63 WIR

CONDUCTOR INDIVIDUAL LENGTH NUMBER	ITEM NO.	2	FROM CUT WIRE OR SHIELD STRIP WIRE OR JACKET CIRCUIT POINT	2	TIN	2	TERMINATION SPEC. 1 ITEM NO.					NO.	TO CUT WIRE OR SHIELD STRIP WIRE OR JACKET CIRCUIT POINT	2	TIN	2	TERMINATION SPEC. 1 ITEM NO.					NO.
B 860R			P84-D	25N									TB22- 65AB	16N			107						
B 861	46			225		200	85			7				400		370	48	52	846				
B 861B	41		TB22- 61	16N			107						SHLD B 861	25N									
B 861L			P 9-E	25N									TB22- 62CD	16N			107						
B 861R			P 9-D	25N									TB22- 62AB	16N			107						
B 862	46			225		200	85			7				400		370	48	52	846				
B 862B	41		TB22- 64	16N			107						SHLD B 862	25N									
B 862L			P83-G	25N									TB22- 63CD	16N			107						
B 862R			P83-F	25N									TB22- 63AB	16N			107						
B 863	46			225		200	85			7				400		370	48	52	846				
B 863B	41		TB20- 64	16N			107						SHLD B 863	25N									
B 863L			P83-L	25N									TB20- 63CD	16N			107						
B 863R			P83-K	25N									TB20- 63AB	16N			107						
B 864	46			225		200	85			7				400		370	48	52	846				
B 864B	41		TB22- 61	16N			107						SHLD B 864	25N									
B 864L			P83-R	25N									TB22- 60CD	16N			107						
B 864R			P83-P	25N									TB22- 60A	16N			107						
B 865	46			225		200	85			7				400		370	48	52	846				

1 THE STD CONDUCTOR TERMINATION FIGURES ARE PER
2 DIMENSIONS ARE IN INCHES AND TWO PLACE DECIMALS.

MANNED SPACECRAFT CENTER HOUSTON, TEXAS | SIZE A | 1900943

SCALE - NONE | REV LTR AR | SHEET 110 OF 188

MIL 2089 - 4-63 WIR

CONDUCTOR INDIVIDUAL LENGTH NUMBER	ITEM NO.	2	FROM CUT WIRE OR SHIELD STRIP WIRE OR JACKET CIRCUIT POINT	2	TIN	2	TERMINATION SPEC. 1 ITEM NO.					NO.	TO CUT WIRE OR SHIELD STRIP WIRE OR JACKET CIRCUIT POINT	2	TIN	2	TERMINATION SPEC. 1 ITEM NO.					NO.
B 865B	41		TB20- 77	16N			107						SHLD B 865	25N									
B 865L			J16-H*	25N									TB20- 76CD	16N			107						
B 865R			J16-G*	25N									TB20- 76AB	16N			107						
B 866	42		P32-S*	25N									TB21- 44AB	16N			107						
B 867	42		P32-T*	25N									TB21- 57	16N			107						
R 868	12																						
B 868L			P32-X	25N									TB21- 59CD	16N			107						
B 868R			P32-W	25N									TB21- 59AB	16N			107						
B 869	46			225		200	85			7				400		370	48	52	846				
B 869B	41		TB21- 88	16N			107						SHLD B 869	25N									
B 869L			P10-G	25N									TB21- 87CD	16N			107						
B 869R			P10-F	25N									TB21- 87AB	16N			107						
B 870	46			225		200	85			7				400		370	48	52	846				
B 870B	41		TB21- 84	16N			107						SHLD B 870	25N									
B 870L			P10-J	25N									TB21- 83CD	16N			107						
B 870R			P10-H	25N									TB21- 83AB	16N			107						
B 871	46			225		200	85			7				400		370	48	52	846				
B 871B	41		TB21- 81	16N			107						SHLD B 871	25N									

1 THE STD CONDUCTOR TERMINATION FIGURES ARE PER
2 DIMENSIONS ARE IN INCHES AND TWO PLACE DECIMALS.

MANNED SPACECRAFT CENTER HOUSTON, TEXAS | SIZE A | 1900943

SCALE - NONE | REV LTR AR | SHEET 111 OF 188

MIL 2089 - 4-63 WIR

CONDUCTOR INDIVIDUAL LENGTH NUMBER	ITEM NO.	2	FROM CUT WIRE OR SHIELD STRIP WIRE OR JACKET CIRCUIT POINT	3	TIN	2	TERMINATION SPEC. 1 ITEM NO.					NO.	TO CUT WIRE OR SHIELD STRIP WIRE OR JACKET CIRCUIT POINT	3	TIN	2	TERMINATION SPEC. 1 ITEM NO.					NO.
B 871L			P10-T	25	N								TB21- 82CD	16	N		107						
B 871R			P10-S	25	N								TB21- 82AB	16	N		107						
B 872	46			225		200	85			7				400		370	48	52	846				
B 872B	41		TB21- 88	16	N		107						SHLD B 872	25	N								
B 872L			P10-V	25	N								TB21- 86CD	16	N		107						
B 872R			P10-U	25	N								TB21- 86AB	16	N		107						
B 873	46			225		200	85			7				400		370	48	52	846				
B 873B	41		TB21- 84	16	N		107						SHLD B 873	25	N								
B 873L			P85-G	25	N								TB21- 85CD	16	N		107						
B 873R			P85-F	25	N								TB21- 85AB	16	N		107						
B 874	46			225		200	85			7				400		370	48	52	846				
B 874B	41		TB21- 81	16	N		107						SHLD B 874	25	N								
B 874L			P85-J	25	N								TB21- 79	16	N		107						
B 874R			P85-H	25	N								TB21- 80	16	N		107						
B 875	46			225		200	85			7				400		370	48	52	846				
B 875B	41		TB21- 88	16	N		107						SHLD B 875	25	N								
B 875L			P 9-T	25	N								TB21- 89CD	16	N		107						
B 875R			P 9-S	25	N								TB21- 89AB	16	N		107						

1 THE STD CONDUCTOR TERMINATION FIGURES ARE PER
2 DIMENSIONS ARE IN INCHES AND TWO PLACE DECIMALS.

MANNED SPACECRAFT CENTER HOUSTON, TEXAS | SIZE A | 1900943
SCALE - NONE | REV LTR AR | SHEET 112 OF 188

MIL 2049 - 4-63 WIN

CONDUCTOR INDIVIDUAL LENGTH NUMBER	ITEM NO.	2	FROM CUT WIRE OR SHIELD STRIP WIRE OR JACKET CIRCUIT POINT	3	TIN	2	TERMINATION SPEC. 1 ITEM NO.					NO.	TO CUT WIRE OR SHIELD STRIP WIRE OR JACKET CIRCUIT POINT	3	TIN	2	TERMINATION SPEC. 1 ITEM NO.					NO.
B 876			DELETED																				
B 876B			DELETED																				
B 876L			DELETED																				
B 876R			DELETED																				
B 877			DELETED																				
B 877B			DELETED																				
B 877L			DELETED																				
B 877R			DELETED																				
B 878	42		J18-LL	25	N								P14-V*	25	N								
B 879	42		J22-J	25	N								P14-W*	25	N								
B 880	16		P22-A	25	N								TB25- 12	40	N		111						
B 881	41		P90-E	327	N								TB23- 12	20	N		111						
B 882	41		P90-I	327	N								TB23- 13	20	N		111						
B 883			J22-U*	25	N								TB22- 60AB	16	N		107						
B 883	07			225		200	120			7				225		200	117	118	856				
B 883B	41		TB22- 61	16	N		107						SHLD B 883	25	N								
B 884	42		J22-V*	25	N								TB22- 60CD	16	N		107						
B 885			J22-G	25	N								TB22- 63AB	16	N		107						

1 THE STD CONDUCTOR TERMINATION FIGURES ARE PER
2 DIMENSIONS ARE IN INCHES AND TWO PLACE DECIMALS.

MANNED SPACECRAFT CENTER HOUSTON, TEXAS | SIZE A | 1900943
SCALE - NONE | REV LTR AR | SHEET 113 OF 188

MIL 2049 - 4-63 WIN

CONDUCTOR INDIVIDUAL LENGTH NUMBER	ITEM NO.	2	FROM CUT WIRE OR SHIELD STRIP WIRE OR JACKET CIRCUIT POINT	3	TIN	2	TERMINATION SPEC. 1 ITEM NO.					NO.	TO CUT WIRE OR SHIELD STRIP WIRE OR JACKET CIRCUIT POINT	3	TIN	2	TERMINATION SPEC. 1 ITEM NO.					NO.
B 885	07			225		200	120			7				225		200	117	118	856				
B 885B	41		TB22- 64	16	N		107						SHLD B 885	25	N								
B 886	42		J22-H	25	N								TB22- 63CD	16	N		107						
B 887	42		J21-W	25	N								TB22- 40AB	16	N		107						
B 888	40		P30-A	25	N								TB25- 2	20	N		111						
B 889	46			225		200	85			7				400		370	48	52	846				
B 889B	41		TB21- 91	16	N		107						SHLD B 889	25	N								
B 889L			P10-V*	25	N								TB21- 92CD	16	N		107						
B 889R			P10-U*	25	N								TB21- 92AB	16	N		107						
B 890	46			225		200	85			7				400		370	48	52	846				
B 890B	41		TB21- 91	16	N		107						SHLD B 890	25	N								
B 890L			P 9-G*	25	N								TB21- 93CD	16	N		107						
B 890R			P 9-F*	25	N								TB21- 90AB	16	N		107						
B 891	46			225		200	85			7				400		370	48	52	846				
B 891B	41		TB21- 91	16	N		107						SHLD B 891	25	N								
B 891L			P83-E*	25	N								TB21- 90CD	16	N		107						
B 891R			P83-D*	25	N								TB21- 90AB	16	N		107						
B 892	42		J16-Z*	25	N								TB21- 40AB	16	N		107						

1 THE STD CONDUCTOR TERMINATION FIGURES ARE PER
2 DIMENSIONS ARE IN INCHES AND TWO PLACE DECIMALS.

MANNED SPACECRAFT CENTER HOUSTON, TEXAS | SIZE A | 1900943
SCALE - NONE | REV LTR AR | SHEET 114 OF 188

MIL 2049 - 4-63 WIN

CONDUCTOR INDIVIDUAL LENGTH NUMBER	ITEM NO.	2	FROM CUT WIRE OR SHIELD STRIP WIRE OR JACKET CIRCUIT POINT	3	TIN	2	TERMINATION SPEC. 1 ITEM NO.					NO.	TO CUT WIRE OR SHIELD STRIP WIRE OR JACKET CIRCUIT POINT	3	TIN	2	TERMINATION SPEC. 1 ITEM NO.					NO.
B 893	42		J16-DD	25	N								TB21- 40AB	16	N		107						
B 894	42		J16-GG	25	N								TB21- 40AB	16	N		107						
B 895	46			225		200	85			7				400		370	48	52	846				
B 895B	41		TB19- 7	16	N		107						SHLD B 895	25	N								
B 895L			P29-E	25	N								TB19- 6CD	16	N		107						
B 895R			P29-D	25	N								TB19- 6AB	16	N		107						
B 896	65			225		200	86	87	856					225		200	86	87	856				
B 896A	41		SHLD B 896	25	N								TB17- 49CD	16	N		107						
B 896B	41		P15-F	25	N								SHLD B 896	25	N								
B 896E			TB17- 49AB	16	N		107						P15-G	25	N								
B 897	65			225		200	86	87	856					225		200	86	87	856				
B 897A	41		SHLD B 897	25	N								TB17- 48CD	16	N		107						
B 897B	41		P15-K	25	N								SHLD B 897	25	N								
B 897E			TB17- 48AB	16	N		107						P15-L	25	N								
B 898	65			225		200	86	87	856					225		200	86	87	856				
B 898A	41		SHLD B 898	25	N								TB17- 47CD	16	N		107						
B 898B	41		P14-X	25	N								SHLD B 898	25	N								
B 898E			TB17- 47AB	16	N		107						P14-W	25	N								

1 THE STD CONDUCTOR TERMINATION FIGURES ARE PER
2 DIMENSIONS ARE IN INCHES AND TWO PLACE DECIMALS.

MANNED SPACECRAFT CENTER HOUSTON, TEXAS | SIZE A | 1900943
SCALE - NONE | REV LTR AR | SHEET 115 OF 188

MIL 2049 - 4-63 WIN

CONDUCTOR NUMBER	INDIVIDUAL LENGTH ITEM NO.		FROM CUT WIRE OR SHIELD STRIP WIRE OR JACKET CIRCUIT POINT										TO CUT WIRE OR SHIELD STRIP WIRE OR JACKET CIRCUIT POINT										
B 920A	41		SHLD B 920	25N									TB17- 32CD	16N		107							
B 920B	41		P15-M	25N									SHLD B 920	25N									
B 920E			TB17- 32AB	16N		107							P15-N	25N									
B 921	65			225	200	86	87	856						225	200	86	87	856					
B 921A	41		SHLD B 921	25N									P14-G*	25N									
B 921B	41		TB17- 39CD	16N		107							SHLD B 921	25N									
B 921E			P14-F*	25N									TB17- 39AB	16		107							
B 922	65			225	200	86	87	856						225	200	86	87	856					
B 922A	41		SHLD B 922	25N									P14-R	25N									
B 922B	41		TB17- 38CD	16N		107							SHLD B 922	25N									
B 922E			P14-P	25N									TB17- 38AB	16N		107							
B 923	65			225	200	86	87	856						225	200	86	87	856					
B 923A	41		SHLD B 923	25N									P14-S*	25N									
B 923B	41		TB17- 31CD	16N		107							SHLD B 923	25N									
B 923E			P14-U*	25N									TB17- 31AB	16N		107							
B 924	65			225	200	86	87	856						225	200	86	87	856					
B 924A	41		SHLD B 924	25N									P15-EE	25N									
B 924B	41		TB17- 30CD	16N		107							SHLD B 924	25N									

1 THE STD CONDUCTOR TERMINATION FIGURES ARE PER
2 DIMENSIONS ARE IN INCHES AND TWO PLACE DECIMALS.

MANNED SPACECRAFT CENTER HOUSTON, TEXAS | SIZE A | 1900943

SCALE-NONE | REV LTR AR | SHEET 120 OF 188

MIL 2089 - 4-63 WIR

CONDUCTOR NUMBER	INDIVIDUAL LENGTH ITEM NO.		FROM CUT WIRE OR SHIELD STRIP WIRE OR JACKET CIRCUIT POINT										TO CUT WIRE OR SHIELD STRIP WIRE OR JACKET CIRCUIT POINT										
B 939	46			225	200	85			7					400	370	48	52	846					
B 939B	41		TB22- 94	16N		107							SHLD B 939	25N									
B 939L			P86-J*	25N									TB22- 93CD	16N		107							
B 939R			P86-H*	25N									TB22- 93AB	16N		107							
B 940	46			225	200	85			7					400	370	48	52	846					
B 940B	41		TB22- 91	16N		107							SHLD B 940	25N									
B 940L			P83-R*	25N									TB22- 90CD	16N		107							
B 940R			P83-P*	25N									TB22- 90AB	16N		107							
B 941	42		J22-A*	25N									TB19- 98AB	16N		107							
B 942	65			225	200	86	87	856						225	200	86	87	856					
B 942A	41		SHLD B 942	25N									TB17- 25CD	16N		107							
B 942B	41		P14-E	25N									SHLD B 942	25N									
B 942E			TB17- 25AB	16N		107							P14-D	25N									
B 943	65			225	200	86	87	856						225	200	86	87	856					
B 943A	41		SHLD B 943	25N									P14-X*	25N									
B 943B	41		TB17- 29CD	16N		107							SHLD B 943	25N									
B 943E			P14-R*	25N									TB17- 29AB	16N		107							
B 944	65			225	200	86	87	856						225	200	86	87	856					

1 THE STD CONDUCTOR TERMINATION FIGURES ARE PER
2 DIMENSIONS ARE IN INCHES AND TWO PLACE DECIMALS.

MANNED SPACECRAFT CENTER HOUSTON, TEXAS | SIZE A | 1900943

SCALE-NONE | REV LTR AR | SHEET 122 OF 188

MIL 2089 - 4-63 WIR

CONDUCTOR NUMBER	INDIVIDUAL LENGTH ITEM NO.		FROM CUT WIRE OR SHIELD STRIP WIRE OR JACKET CIRCUIT POINT										TO CUT WIRE OR SHIELD STRIP WIRE OR JACKET CIRCUIT POINT										
B 924E			P15-FF	25N									TB17- 30AB	16N		107							
B 925			DELETE																				
B 926	41		P99-R*	25N									P20-BB	25N									
B 927	42		P99-R	25N									P20-LL	25N									
B 928	42		P99-Y	25N									P20-EE	25N									
B 929	41		P99-X	25N									P20-FF	25N									
B 930	42		P99-J	25N									P20-MM	25N									
B 931	41		P99-M	25N									P20-GG	25N									
B 932			DELETE																				
B 933	41		TB22- 95AB	16N		107							P20-JJ	25N									
B 934	41		P99-W	25N									P20-KK	25N									
B 935	42		J18-JJ	25N									P96-V	25N									
B 936	42		P31-K	25N									TB22- 40AB	16N		107							
B 937	42		P98-EE	25N									TB22- 2CD	16N		107							
B 938	46			225	200	85			7					400	370	48	52	846					
B 938B	41		TB22- 91	16N		107							SHLD B 938	25N									
B 938L			P84-J*	25N									TB22- 92CD	16N		107							
B 938R			P84-H*	25N									TB22- 92AB	16N		107							

1 THE STD CONDUCTOR TERMINATION FIGURES ARE PER
2 DIMENSIONS ARE IN INCHES AND TWO PLACE DECIMALS.

MANNED SPACECRAFT CENTER HOUSTON, TEXAS | SIZE A | 1900943

SCALE-NONE | REV LTR AR | SHEET 121 OF 188

MIL 2089 - 4-63 WIR

CONDUCTOR NUMBER	INDIVIDUAL LENGTH ITEM NO.		FROM CUT WIRE OR SHIELD STRIP WIRE OR JACKET CIRCUIT POINT										TO CUT WIRE OR SHIELD STRIP WIRE OR JACKET CIRCUIT POINT										
B 944A	41		SHLD B 944	25N									P15-Y*	25N									
B 944B	41		TB17- 28CD	16N		107							SHLD B 944	25N									
B 944E			P15-Z*	25N									TB17- 28AB	16N		107							
B 945	65			225	200	86	87	856						225	200	86	87	856					
B 945A	41		SHLD B 945	25N									P15-AA	25N									
B 945B	41		TB17- 27CD	16N		107							SHLD B 945	25N									
B 945E			P15-BB	25N									TB17- 27AB	16N		107							
B 946	65			225	200	86	87	856						225	200	86	87	856					
B 946A	41		SHLD B 946	25N									P15-CC	25N									
B 946B	41		TB17- 26CD	16N		107							SHLD B 946	25N									
B 946E			P15-DD	25N									TB17- 26AB	16N		107							
B 948	42		P24-B	25N									TB23- 11	20N		112							
B 949	42		P28-D	25N									TB23- 17	20N		111							
B 950	42		P37-K	25N									J24-R*	25N									
B 951	42		P37-M	25N									J24-S*	25N									
B 952	42		P37-T*	25N									J24-V*	25N									
B 953	42		P37-V*	25N									J24-BB	25N									
B 954	42		P37-P*	25N									J24-W*	25N									

1 THE STD CONDUCTOR TERMINATION FIGURES ARE PER
2 DIMENSIONS ARE IN INCHES AND TWO PLACE DECIMALS.

MANNED SPACECRAFT CENTER HOUSTON, TEXAS | SIZE A | 1900943

SCALE-NONE | REV LTR AR | SHEET 123 OF 188

MIL 2089 - 4-63 WIR

CONDUCTOR NUMBER	INDIVIDUAL LENGTH ITEM NO.	2	FROM CUT WIRE OR SHIELD STRIP WIRE OR JACKET CIRCUIT POINT	3	TIN	2	TERMINATION SPEC. 1 ITEM NO.	NO.	TO CUT WIRE OR SHIELD STRIP WIRE OR JACKET CIRCUIT POINT	3	TIN	2	TERMINATION SPEC 1 ITEM NO.	NO.
B 955	42		P37-X*	25N					J24-Y*	25N				
B 956	42		P37-Z*	25N					J24-Q*	25N				
B 957	42		P37-BB	25N					J24-N*	25N				
B 958	42		P37-DD	25N					J24-P*	25N				
B 959	42		P37-I*	25N					J24-U*	25N				
B 960	46			225		200	85	7		225		200	48 52 845	
B 960B	41		SHLD B 960						E 26	25N				
B 960L			P37-NN	25N					J24-D	25N				
B 960R			P37-Z	25N					J24-C	25N				
B 961	42		P37-M*	25N					J24-X*	25N				
B 962	42		P37-L	25N					J24-T*	25N				
B 963	65			225		200	86 87 856			225		200	86 87 856	
B 963A	41		SHLD B 963	25N					TB17- 10CD	16N		107		
B 963B	41		P14-K	25N					SHLD B 963	25N				
B 963E			TB17- 10AB	16N		107			P14-L	25N				
B 964	65			225N		200	86 87 85 6			225N		200	86 87 85 6	
B 964A	41		SHLD B 964	25N					P14-GG	25N				
B 964B	41		TB17- 13CD	25N		107			SHLD B 964	25N				

1 THE STD CONDUCTOR TERMINATION FIGURES ARE PER
2 DIMENSIONS ARE IN INCHES AND TWO PLACE DECIMALS.

MANNED SPACECRAFT CENTER HOUSTON, TEXAS | SIZE A | 1900943
SCALE - NONE | REV LTR AR | SHEET 124 OF 188

MIL 2089 - 4-63 WIR

CONDUCTOR NUMBER	INDIVIDUAL LENGTH ITEM NO.	2	FROM CUT WIRE OR SHIELD STRIP WIRE OR JACKET CIRCUIT POINT	3	TIN	2	TERMINATION SPEC. 1 ITEM NO.	NO.	TO CUT WIRE OR SHIELD STRIP WIRE OR JACKET CIRCUIT POINT	3	TIN	2	TERMINATION SPEC 1 ITEM NO.	NO.
B 964E			P14-FF	25N					TB17- 13AB	16N			107	
B 965	65			225N		200	86 87 85 6			225N		200	86 87 85 6	
B 965A	41		SHLD B 965	25N					P14-HH	25N				
B 965B	41		TB17- 12CD	16N		107			SHLD B 965	25N				
B 965E			P14-CC	25N					TB17- 12AB	16N			107	
B 966	65			225N		200	86 87 85 6			225		200	86 87 856	
B 966A	41		SHLD B 966	25N					P15-B*	25N				
B 966B	41		TB17- 15CD	16N		107			SHLD B 966	25N				
B 966E			P15-A*	25N					TB17- 15AB	16N			107	
B 967	65			225N		200	86 87 85 6			225		200	86 87 856	
B 967A	41		SHLD B 967	25N					P14-EE	25N				
B 967B	41		TB17- 14CD	16N		107			SHLD B 967	25N				
B 967E			P14-DD	25N					TB17- 14AB	16N			107	
B 968	12													
B 968L			J22-V	25N					TB21- 63AB	16N			107	
B 968R			J22-U	25N					TB21- 47AB	16N			107	
B 969	12													
B 969L			J22-X	25N					TB21- 60AB	16N			107	

1 THE STD CONDUCTOR TERMINATION FIGURES ARE PER
2 DIMENSIONS ARE IN INCHES AND TWO PLACE DECIMALS.

MANNED SPACECRAFT CENTER HOUSTON, TEXAS | SIZE A | 1900943
SCALE - NONE | REV LTR AR | SHEET 125 OF 188

MIL 2089 - 4-63 WIR

CONDUCTOR NUMBER	INDIVIDUAL LENGTH ITEM NO.	2	FROM CUT WIRE OR SHIELD STRIP WIRE OR JACKET CIRCUIT POINT	3	TIN	2	TERMINATION SPEC. 1 ITEM NO.	NO.	TO CUT WIRE OR SHIELD STRIP WIRE OR JACKET CIRCUIT POINT	3	TIN	2	TERMINATION SPEC 1 ITEM NO.	NO.
B 969R			J22-W	25N					TB21- 47CD	16N			107	
B 970	12													
B 970L			J22-Z	25N					TB21- 57AB	16N			107	
B 970R			J22-Y	25N					TB21- 44AB	16N			107	
B 971	46			225		200	85	7		225		200	48 52 845	
B 971B	41		SHLD B 971	25N					E 26	25N				
B 971L			P11-FF	25N					J22-T	25N				
B 971R			P11-X	25N					J22-S	25N				
B 972	42		P11-T	25N					J22-E	25N				
B 973	42		P11-R	25N					J22-C	25N				
B 974	42		P11-S	25N					J22-D	25N				
B 975	42		P11-V	25N					J22-AA	25N				
B 976	42		P11-W	25N					J22-BB	25N				
B 977	42		J21-U	25N					TB22- 2CD	16N		107		
B 978	42		P37-H*	25N					J22-CC	25N				
B 979	42		P37-J*	25N					J22-DD	25N				
B 980	42		P37-N*	25N					J22-EE	25N				
B 982	42		P37-S*	25N					J22-GG	25N				

1 THE STD CONDUCTOR TERMINATION FIGURES ARE PER
2 DIMENSIONS ARE IN INCHES AND TWO PLACE DECIMALS.

MANNED SPACECRAFT CENTER HOUSTON, TEXAS | SIZE A | 1900943
SCALE - NONE | REV LTR AR | SHEET 126 OF 188

MIL 2089 - 4-63 WIR

CONDUCTOR NUMBER	INDIVIDUAL LENGTH ITEM NO.	2	FROM CUT WIRE OR SHIELD STRIP WIRE OR JACKET CIRCUIT POINT	3	TIN	2	TERMINATION SPEC. 1 ITEM NO.	NO.	TO CUT WIRE OR SHIELD STRIP WIRE OR JACKET CIRCUIT POINT	3	TIN	2	TERMINATION SPEC 1 ITEM NO.	NO.
B 983	42		P37-U*	25N					J22-HH	25N				
B 984	42		P37-W*	25N					J22-W*	25N				
B 985	42		P37-Y*	25N					J22-X*	25N				
B 986	42		P37-AA	25N					J22-Y*	25N				
B 987	42		P37-CC	25N					J22-Z*	25N				
B 988	42		J16-JJ	25N					TB21- 5AB	16N			107	
B 989	42		J16-HH	25N					TB21- 5CD	16N			107	
B 990	40		J26-AA	25N		157			TB 9- 1	20N			111	
B 991	65			225		200	86 87 856			225		200	86 87 856	
B 991A	41		SHLD B 991	25N					TB17-16CD	16N			107	
B 991B	41		P14-Y	25N					SHLD B 991	25N				
B 991E			TB17-16AB	16N		107			P14-Z	25N				
B 992	42		P14-E*	25N					TB17- 1AB	16N			107	
B 993	44			225N		200	83			300		270	51 55 83	
B 993B	41		E 48	25N					SHLD B 993	25N				
B 993L			P99-N*	25N					P90-F	25N				
B 993R			P99-M*	25N					P90-G	25N				
B 994	42		P24-S	25N					J20-M	25N				

1 THE STD CONDUCTOR TERMINATION FIGURES ARE PER
2 DIMENSIONS ARE IN INCHES AND TWO PLACE DECIMALS.

MANNED SPACECRAFT CENTER HOUSTON, TEXAS | SIZE A | 1900943
SCALE - NONE | REV LTR AR | SHEET 127 OF 188

MIL 2089 - 4-63 WIR

CONDUCTOR NUMBER	INDIVIDUAL LENGTH ITEM NO.	FROM CUT WIRE OR SHIELD STRIP WIRE OR JACKET CIRCUIT POINT	TYPE	TERMINATION SPEC. ITEM NO.	NO.	TO CUT WIRE OR SHIELD STRIP WIRE OR JACKET CIRCUIT POINT	TYPE	TERMINATION SPEC. ITEM NO.	NO.
B 995	42	P24-C*	25N			J20-C	25N		
B 999	40	P 4-A	25N			TB25- 9	20N	111	
B1000	42	J22-D*	25N			TB22- 2AB	16N	107	
B1001	41	P24-A	25N			TB25- 10	20N	111	
B1006	07		225	200120	7		225	200117118 856	
B1006B	41	TB22-100	16N	107		SHLD B1006	25N		
B1006W		P36-F*	25N			TB22- 99AB	16N	107	
B1007	07		225	200120	7		225	200117118 856	
B1007B	41	TB21-100	16N	107		SHLD B1007	25N		
B1007W		P36-D*	25N			TB21- 99AB	16N	107	
B1008	07		225	200120	7		225	200117118 856	
B1008B	41	TB21- 97	16N	107		SHLD B1008	25N		
B1008W		P36-B*	25N			TB21- 98AB	16N	107	
B1009	42	P92-B*	25N			J18-N*	25N		
B1010	42	P92-A*	25N			J18-M*	25N		
B1011	42	P92-Y	25N			J18-K*	25N		
B1012	42	P96-A	25N			J21-R*	25N		
B1013	42	P96-B	25N			J21-Q*	25N		

1 THE STD CONDUCTOR TERMINATION FIGURES ARE PER
2 DIMENSIONS ARE IN INCHES AND TWO PLACE DECIMALS.

MANNED SPACECRAFT CENTER HOUSTON, TEXAS | SIZE A | 1900943
SCALE - NONE | REV LTR AR | SHEET 128 OF 188

MIL 2089 - 4-65 WIR

CONDUCTOR NUMBER	INDIVIDUAL LENGTH ITEM NO.	FROM CUT WIRE OR SHIELD STRIP WIRE OR JACKET CIRCUIT POINT	TYPE	TERMINATION SPEC. ITEM NO.	NO.	TO CUT WIRE OR SHIELD STRIP WIRE OR JACKET CIRCUIT POINT	TYPE	TERMINATION SPEC. ITEM NO.	NO.
B1014	42	P96-C	25N			J21-P*	25N		
B1015	42	P96-D	25N			J21-N*	25N		
B1016	42	P96-E	25N			J21-M*	25N		
B1017	42	P96-G	25N			J21-B*	25N		
B1018	42	P96-H	25N			J21-C*	25N		
B1019	42	P96-J	25N			J21-D*	25N		
B1020	42	P96-K	25N			J21-E*	25N		
B1021	42	P96-L	25N			J21-F*	25N		
B1022	42	P96-M	25N			J21-G*	25N		
B1023	42	P96-N	25N			J21-H*	25N		
B1024	42	P96-P	25N			J21-J*	25N		
B1025	42	P96-R	25N			J21-K*	25N		
B1026	42	P96-S	25N			J21-A*	25N		
B1027	42	P96-X	25N			J21-U*	25N		
B1028	42	J25-CC	25N			TB17- 93AB	16N	107	
B1029	42	J25-DD	25N			TB17- 92AB	16N	107	
B1030	42	P36-H	25N			J18-P*	25N		
B1031	42	P36-G	25N			J18-T*	25N		

1 THE STD CONDUCTOR TERMINATION FIGURES ARE PER
2 DIMENSIONS ARE IN INCHES AND TWO PLACE DECIMALS.

MANNED SPACECRAFT CENTER HOUSTON, TEXAS | SIZE A | 1900943
SCALE - NONE | REV LTR AR | SHEET 129 OF 188

MIL 2089 - 4-65 WIR

CONDUCTOR NUMBER	INDIVIDUAL LENGTH ITEM NO.	FROM CUT WIRE OR SHIELD STRIP WIRE OR JACKET CIRCUIT POINT	TYPE	TERMINATION SPEC. ITEM NO.	NO.	TO CUT WIRE OR SHIELD STRIP WIRE OR JACKET CIRCUIT POINT	TYPE	TERMINATION SPEC. ITEM NO.	NO.
B1032	42	P36-F	25N			J18-Y	25N		
B1033	42	P36-Z	25N			J18-KK	25N		
B1035	41	J26-C*	25N			TB20- 4AB	16N	107	
B1036	42	J26-D*	25N			TB20- 40CD	16N	107	
B1037	41	TB20- 14AB	16N	107		P17-Y*	25N		
B1038	42	P16-CC	25N			TB20- 13AB	16N	107	
B1040	46		225	200 85			225	200 48 52 845	
B1040B	41	E 26	25N			SHLD B1040	25N		
B1040L		P35-J	25N			J24-D*	25N		
B1040R		P35-H	25N			J24-C*	25N		
B1041	46		225	200 85			225	200 48 52 845	
B1041B	41	E 26	25N			SHLD B1041	25N		
B1041L		P35-G	25N			J24-A*	25N		
B1041R		P35-F	25N			J24-B*	25N		
B1042	46		225	200 85			225	200 48 52 845	
B1042B	41	E 26	25N			SHLD B1042	25N		
B1042L		P35-E	25N			J24-H*	25N		
B1042R		P35-D	25N			J24-G*	25N		

1 THE STD CONDUCTOR TERMINATION FIGURES ARE PER
2 DIMENSIONS ARE IN INCHES AND TWO PLACE DECIMALS.

MANNED SPACECRAFT CENTER HOUSTON, TEXAS | SIZE A | 1900943
SCALE - NONE | REV LTR AR | SHEET 130 OF 188

MIL 2089 - 4-65 WIR

CONDUCTOR NUMBER	INDIVIDUAL LENGTH ITEM NO.	FROM CUT WIRE OR SHIELD STRIP WIRE OR JACKET CIRCUIT POINT	TYPE	TERMINATION SPEC. ITEM NO.	NO.	TO CUT WIRE OR SHIELD STRIP WIRE OR JACKET CIRCUIT POINT	TYPE	TERMINATION SPEC. ITEM NO.	NO.
B1043	46		225	200 85			225	200 48 52 845	
B1043B	41	E 26	25N			SHLD B1043	25N		
B1043L		P35-C	25N			J24-F*	25N		
B1043R		P35-B	25N			J24-E*	25N		
B1044	41	J26-J*	25N			TB20- 32AB	16N	107	
B1045	41	J26-E*	25N			TB20- 31AB	16N	107	
B1046	65		225	200 86 87 856			225	200 86 87 856	
B1046A	41	SHLD B1046	25N			P25-V*	25N		
B1046B	41	TB17- 22CD	16N	107		SHLD B1046	25N		
B1046E		P25-U*	25N			TB17- 22AB	16N	107	
B1047	65		225	200 86 87 85 6			225	200 86 87 85 6	
B1047A	41	SHLD B1047	25N			P25-Z*	25N		
B1047B		TB17- 21CD	16N	107		SHLD B1047	25N		
B1047E		P25-Y*	25N			TB17- 21AB	16	107	
B1048	46		225	200 85 7			400	370 48 52 846	
B1048B	41	TB17- 50	16N	107		SHLD B1048	25N		
B1048L		P26-P*	25N			TB17- 23CD	16N	107	
B1048R		P26-N*	25N			TB17- 23AB	16N	107	

1 THE STD CONDUCTOR TERMINATION FIGURES ARE PER
2 DIMENSIONS ARE IN INCHES AND TWO PLACE DECIMALS.

MANNED SPACECRAFT CENTER HOUSTON, TEXAS | SIZE A | 1900943
SCALE - NONE | REV LTR AR | SHEET 131 OF 188

MIL 2089 - 4-65 WIR

GMI WIRING HARNESS B AR 1900943

CONDUCTOR INDIVIDUAL LENGTH NUMBER	ITEM NO. (2)		FROM CUT WIRE OR SHIELD STRIP WIRE OR JACKET CIRCUIT POINT	(2)	TI IN	(2)	TERMINATION SPEC. (1) ITEM NO.	NO.	TO CUT WIRE OR SHIELD STRIP WIRE OR JACKET CIRCUIT POINT	(2)	TI IN	(2)	TERMINATION SPEC. (1) ITEM NO.	NO.
B1049	46			225		200	85			400		370	48 52 846	
B1049B	41		E 59	25N					SHLD B1049	25N				
B1049L			P24-K*	25N					P98-X*	25N				
B1049R			P24-J*	25N					P98-W*	25N				
B1050	7			225		200	117 118 855			225		200	120 7	
B1050A	41		SHLD B1050	25N					E 32	25N				
B1050L			DELETE											
B1050W			P36-Q*	25N					J22-R*	25N				
B1051	42		P36-AA	25N					J22-T*	25N				
B1052	42		P36-DD	25N					J22-F	25N				
B1053	42		P36-BB	25N					J22-K*	25N				
B1054	42		P36-EE	25N					TB20- 7AB	16N		107		
B1056	42		P36-GG	25N					TB21- 4CD	16N		107		
B1057	42		P36-W*	25N					TB18-100CD	16N		107		
B1058	42		P36-X*	25N					TB18-100AB	16N		107		
B1059	42		P35-A*	25N					J22-B*	25N				
B1060	42		P98-GG	25N					J16-D*	25N				
B1061	42		P98-HH	25N					J16-E*	25N				

(1) THE STD CONDUCTOR TERMINATION FIGURES ARE PER
(2) DIMENSIONS ARE IN INCHES AND TWO PLACE DECIMALS.

MANNED SPACECRAFT CENTER HOUSTON, TEXAS | SIZE A | 1900943
SCALE - NONE | REV LTR AR | SHEET 132 OF 188

MIL 2089 - 4-65 WIR

GMI WIRING HARNESS B AR 1900943

CONDUCTOR INDIVIDUAL LENGTH NUMBER	ITEM NO. (2)		FROM CUT WIRE OR SHIELD STRIP WIRE OR JACKET CIRCUIT POINT	(2)	TI IN	(2)	TERMINATION SPEC. (1) ITEM NO.	NO.	TO CUT WIRE OR SHIELD STRIP WIRE OR JACKET CIRCUIT POINT	(2)	TI IN	(2)	TERMINATION SPEC. (1) ITEM NO.	NO.
B1062	42		P98-FF	25N					TB22- 96	16N		107		
B1063	42		P98-T*	25N					P36-M*	25N				
B1064	41		J26-H*	25N					TB20- 23AB	16N		107		
B1065	41		J26-G*	25N					TB20- 22AB	16N		107		
B1066	41		J26-I*	25N					TB20- 29AB	16N		107		
B1067	41		J26-F*	25N					TB20- 28AB	16N		107		
B1068	41		J26-GG	25N					TB20- 26AB	16N		107		
B1069	41		J26-HH	25N					TB20- 25AB	16N		107		
B1070	42		P25-C*	25N					TB20- 66AB	16N		107		
B1071	42		P25-D*	25N					TB20- 66CD	16N		107		
B1072	42		P35-BB	25N					J25-S*	25N				
B1073	46			225		200	85			225		200	48 52 845	
B1073B	41		E 25	25N					SHLD B1073	25N				
B1073L			P35-S*	25N					J25-Z*	25N				
B1073R			P35-T*	25N					J25-Y*	25N				
B1074	45			225		200	84	7		400		370	50 54 846	
B1074B	41		TB20- 18	16N		107			SHLD B1074	25N				
B1074L			J26-U*	25N					TB20- 17CD	16N		108		

(1) THE STD CONDUCTOR TERMINATION FIGURES ARE PER
(2) DIMENSIONS ARE IN INCHES AND TWO PLACE DECIMALS.

MANNED SPACECRAFT CENTER HOUSTON, TEXAS | SIZE A | 1900943
SCALE - NONE | REV LTR AR | SHEET 133 OF 188

MIL 2089 - 4-65 WIR

GMI WIRING HARNESS B AR 1900943

CONDUCTOR INDIVIDUAL LENGTH NUMBER	ITEM NO. (2)		FROM CUT WIRE OR SHIELD STRIP WIRE OR JACKET CIRCUIT POINT	(2)	TI IN	(2)	TERMINATION SPEC. (1) ITEM NO.	NO.	TO CUT WIRE OR SHIELD STRIP WIRE OR JACKET CIRCUIT POINT	(2)	TI IN	(2)	TERMINATION SPEC. (1) ITEM NO.	NO.
B1074R			J26-T*	25N					TB20- 17AB	16N		108		
B1076	42		TB17- 89AB	25N					J18-H*	25N				
B1077	42		P98-E	25N					J18-G*	25N				
B1078	42		P34-HH	25N					J18-B*	25N				
B1079	42		P34-GG	25N					J18-A*	25N				
B1080	42		P34-FF	25N					J18-C*	25N				
B1081	42		P34-EE	25N					J18-D*	25N				
B1082	42		P34-DD	25N					J18-F*	25N				
B1083	42		P34-CC	25N					J18-E*	25N				
B1084	42		P98-N*	25N					J21-Z*	25N				
B1085	42		P98-G*	25N					J21-HH	25N				
B1086	42		P98-DD	25N					J21-EE	25N				
B1087	42		P98-H*	25N					J21-V	25N				
B1088	42		P98-J*	25N					J21-L	25N				
B1089	42		P98-CC	25N					J21-M	25N				
B1090	42		P98-I*	25N					J21-X*	25N				
B1091	42		P98-V	25N					J21-GG	25N				
B1092	42		P98-U	25N					J21-DD	25N				

(1) THE STD CONDUCTOR TERMINATION FIGURES ARE PER
(2) DIMENSIONS ARE IN INCHES AND TWO PLACE DECIMALS.

MANNED SPACECRAFT CENTER HOUSTON, TEXAS | SIZE A | 1900943
SCALE - NONE | REV LTR AR | SHEET 134 OF 188

MIL 2089 - 4-65 WIR

GMI WIRING HARNESS B AR 1900943

CONDUCTOR INDIVIDUAL LENGTH NUMBER	ITEM NO. (2)		FROM CUT WIRE OR SHIELD STRIP WIRE OR JACKET CIRCUIT POINT	(2)	TI IN	(2)	TERMINATION SPEC. (1) ITEM NO.	NO.	TO CUT WIRE OR SHIELD STRIP WIRE OR JACKET CIRCUIT POINT	(2)	TI IN	(2)	TERMINATION SPEC. (1) ITEM NO.	NO.
B1093	42		P98-T	25N					J21-N	25N				
B1094	42		P98-S	25N					J21-J	25N				
B1095	42		P98-R	25N					J21-K	25N				
B1096	42		P99-L	25N					J18-MM	25N				
B1097	42		P99-T*	25N					J18-AA	25N				
B1098	42		P99-S*	25N					J18-BB	25N				
B1099	42		P98-BB	25N					J21-Z	25N				
B1100	42		P98-Y*	25N					J21-Y	25N				
B1101	42		P99-FF	25N					J21-S	25N				
B1102	42		P98-S*	25N					J21-FF	25N				
B1103	42		P98-R*	25N					J21-Y*	25N				
B1104	42		P98-P*	25N					J21-AA	25N				
B1105	42		P98-M*	25N					J21-BB	25N				
B1106	42		P34-K	25N					J18-PP	25N				
B1107	42		P99-B*	25N					J18-Z	25N				
B1108	46			225		200	85	7		400		370	48 52 846	
B1108B	41		TB18- 99	16N		107			SHLD B1108	25N				
B1108L			P25-GG	25N					TB21- 71	16N		107		

(1) THE STD CONDUCTOR TERMINATION FIGURES ARE PER
(2) DIMENSIONS ARE IN INCHES AND TWO PLACE DECIMALS.

MANNED SPACECRAFT CENTER HOUSTON, TEXAS | SIZE A | 1900943
SCALE - NONE | REV LTR AR | SHEET 135 OF 188

MIL 2089 - 4-65 WIR

CONDUCTOR NUMBER	INDIVIDUAL LENGTH ITEM NO.	2	FROM CUT WIRE OR SHIELD STRIP WIRE OR JACKET CIRCUIT POINT	2	T I N	2	TERMINATION SPEC. 1 ITEM NO.	NO.	TO CUT WIRE OR SHIELD STRIP WIRE OR JACKET CIRCUIT POINT	2	T I N	2	TERMINATION SPEC 1 ITEM NO.	NO.
B1108R			P25-EE	25N					TB18-100AB	16N		107		
B1109	46			225	200	85		7		400	370	48 52	846	
B1109B	41		TB18- 99	16N		107			SHLD B1109	25N				
B1109L			P25-DD	25N					TB21- 77CD	16N		107		
B1109R			P25-CC	25N					TB18-100CD	16N		107		
B1110	41		P92-L	25N					TB23- 13	16N				
B1111	46			225	200	85		7		400	370	48 52	846	
B1111B	41		TB18- 99	16N		107			SHLD B1111	25N				
B1111L			P25-HH	25N					TB18- 98CD	16N		107		
B1111R			P25-FF	25N					TB18- 97CD	16N		107		
B1112	42		P24-CC	25N					TB20- 40AB	16N		107		
B1113	42		P24-DD	25N					TB20- 40CD	16N		107		
B1114	41		P11-D*	25N					TB22- 23AB	16N		107		
B1115	41		P11-E*	25N					TB22- 25AB	16N		107		
B1116	41		P11-F*	25N					TB22- 20AB	16N		107		
B1117	45			225	200	84		7		400	370	50 54	846	
B1117B	41		TB22- 21	16N		107			SHLD B1117	25N				
B1117L			P11-C*	25N					TB22- 23CD	16N		108		

1 THE STD CONDUCTOR TERMINATION FIGURES ARE PER
2 DIMENSIONS ARE IN INCHES AND TWO PLACE DECIMALS.

MANNED SPACECRAFT CENTER HOUSTON, TEXAS | SIZE A | 1900943
SCALE - NONE | REV LTR AR | SHEET 136 OF 188

MIL 2089 - 4-63 WIR

CONDUCTOR NUMBER	INDIVIDUAL LENGTH ITEM NO.	2	FROM CUT WIRE OR SHIELD STRIP WIRE OR JACKET CIRCUIT POINT	2	T I N	2	TERMINATION SPEC. 1 ITEM NO.	NO.	TO CUT WIRE OR SHIELD STRIP WIRE OR JACKET CIRCUIT POINT	2	T I N	2	TERMINATION SPEC 1 ITEM NO.	NO.
B1117R			P11-G*	25N					TB22-22AB	16N		108		
B1118	42		P99-E	25N					J25-D*	25N				
B1119	42		P92-M	25N					J25-E*	25N				
B1120	42		P31-G	25N					J18-Q*	25N				
B1121	42		P31-H	25N					J18-U*	25N				
B1122	42		P31-N	25N					J18-X*	25N				
B1123	42		P31-CC	25N					J18-S*	25N				
B1124	42		P31-EE	25N					J18-R*	25N				
B1125	42		P31-AA	25N					J18-W*	25N				
B1126	42		P31-Z*	25N					J18-V*	25N				
B1127	42		P31-T*	25N					J18-Z*	25N				
B1128	42		P31-Y*	25N					J18-Y*	25N				
B1129	42		P40-B*	25N					P47-J*	25N				
B1130	42		P40-U*	25N					P47-N*	25N				
B1131	42		P40-V*	25N					P47-F*	25N				
B1132	42		P40-W*	25N					P47-G*	25N				
B1133	42		P40-X*	25N					P47-K*	25N				
B1134	42		P40-Y*	25N					P47-W	25N				

1 THE STD CONDUCTOR TERMINATION FIGURES ARE PER
2 DIMENSIONS ARE IN INCHES AND TWO PLACE DECIMALS.

MANNED SPACECRAFT CENTER HOUSTON, TEXAS | SIZE A | 1900943
SCALE - NONE | REV LTR AR | SHEET 137 OF 188

MIL 2089 - 4-63 WIR

CONDUCTOR NUMBER	INDIVIDUAL LENGTH ITEM NO.	2	FROM CUT WIRE OR SHIELD STRIP WIRE OR JACKET CIRCUIT POINT	2	T I N	2	TERMINATION SPEC. 1 ITEM NO.	NO.	TO CUT WIRE OR SHIELD STRIP WIRE OR JACKET CIRCUIT POINT	2	T I N	2	TERMINATION SPEC 1 ITEM NO.	NO.
B1135	42		P40-Z*	25N					P47-X	25N				
B1136	42		P40-AA	25N					P47-Z	25N				
B1137	42		P40-BB	25N					P47-A*	25N				
B1138	42		P40-CC	25N					P47-M	25N				
B1139	42		P40-DD	25N					P47-P	25N				
B1140	42		P40-EE	25N					P47-S	25N				
B1141	42		P40-FF	25N					P47-V	25N				
B1142	42		P40-GG	25N					P47-H	25N				
B1143	42		P40-HH	25N					P47-J	25N				
B1144	42		P40-JJ	25N					P47-K	25N				
B1145	42		P40-KK	25N					P47-L	25N				
B1146	42		P40-LL	25N					P47-B	25N				
B1147	42		P40-MM	25N					P47-C	25N				
B1148	42		P40-NN	25N					P47-D	25N				
B1149	42		P40-PP	25N					P47-F	25N				
B1150	42		P40-N*	25N					P47-B*	25N				
B1151	42		P40-P*	25N					P47-C*	25N				
B1152	42		P40-Q*	25N					P47-D*	25N				

1 THE STD CONDUCTOR TERMINATION FIGURES ARE PER
2 DIMENSIONS ARE IN INCHES AND TWO PLACE DECIMALS.

MANNED SPACECRAFT CENTER HOUSTON, TEXAS | SIZE A | 1900943
SCALE - NONE | REV LTR AR | SHEET 138 OF 188

MIL 2089 - 4-63 WIR

CONDUCTOR NUMBER	INDIVIDUAL LENGTH ITEM NO.	2	FROM CUT WIRE OR SHIELD STRIP WIRE OR JACKET CIRCUIT POINT	2	T I N	2	TERMINATION SPEC. 1 ITEM NO.	NO.	TO CUT WIRE OR SHIELD STRIP WIRE OR JACKET CIRCUIT POINT	2	T I N	2	TERMINATION SPEC 1 ITEM NO.	NO.
B1153	42		P40-R*	25N					P47-E*	25N				
B1154	46			225	200	48 52	845			225	200	85	7	
B1154A	41		SHLD B1154	25N					E 34	25N				
B1154L			P32-Z*	25N					J17-W*	25N				
B1154R			P32-Y*	25N					J17-V*	25N				
B1155	46			225	200	48 52	845			225	200	85	7	
B1155A	41		SHLD B1155	25N					E 34	25N				
B1155L			P32-LL	25N					J17-U*	25N				
B1155R			P32-KK	25N					J17-T*	25N				
B1156	46			225	200	48 52	845			225	200	85	7	
B1156A	41		SHLD B1156	25N					E 34	25N				
B1156L			P32-M*	25N					J17-BB	25N				
B1156R			P32-M	25N					J17-AA	25N				
B1157	46			225	200	48 52	845			225	200	85	7	
B1157A	41		SHLD B1157	25N					E 35	25N				
B1157L			P32-H*	25N					J17-N*	25N				
B1157R			P32-H	25N					J17-M*	25N				
B1158	46			225	200	48 52	845			225	200	85	7	

1 THE STD CONDUCTOR TERMINATION FIGURES ARE PER
2 DIMENSIONS ARE IN INCHES AND TWO PLACE DECIMALS.

MANNED SPACECRAFT CENTER HOUSTON, TEXAS | SIZE A | 1900943
SCALE - NONE | REV LTR AR | SHEET 139 OF 188

MIL 2089 - 4-63 WIR

GMI WIRING HARNESS B AR 1900943

CONDUCTOR INDIVIDUAL LENGTH NUMBER	ITEM NO.		FROM CUT WIRE OR SHIELD STRIP WIRE OR JACKET CIRCUIT POINT		TYIN	TERMINATION SPEC.	ITEM NO.		TO CUT WIRE OR SHIELD STRIP WIRE OR JACKET CIRCUIT POINT		TYIN	TERMINATION SPEC.	ITEM NO.	
B1158A	41		SHLD B1158	25N					E 35	25N				
B1158L			P32-J*	25N					J17-K*	25N				
B1158R			P32-J	25N					J17-J*	25N				
B1159	46			225	200	48 52 845				225	200	85		7
B1159A	41		SHLD B1159	25N					E 35	25N				
B1159L			P32-F*	25N					J17-S*	25N				
B1159R			P32-F	25N					J17-R*	25N				
B1160	46			225	200	48 52 845				225	200	85		7
B1160A	41		SHLD B1160	25N					E 36	25N				
B1160L			P32-D*	25N					J17-B*	25N				
B1160R			P32-D	25N					J17-A*	25N				
B1161	46			225	200	48 52 845				225	200	85		7
B1161A	41		SHLD B1161	25N					E 36	25N				
B1161L			P32-C*	25N					J17-D*	25N				
B1161R			P32-C	25N					J17-C*	25N				
B1162	46			225	200	48 52 845				225	200	85		7
B1162A	41		SHLD B1162	25N					E 36	25N				
B1162L			P32-AA	25N					J17-Y*	25N				

1> THE STD CONDUCTOR TERMINATION FIGURES ARE PER
2> DIMENSIONS ARE IN INCHES AND TWO PLACE DECIMALS.

MANNED SPACECRAFT CENTER HOUSTON, TEXAS | SIZE A | 1900943

SCALE - NONE | REV LTR AR | SHEET 140 OF 188

MIL 2089 - 4-65 WIR

GMI WIRING HARNESS B AR 1900943

CONDUCTOR INDIVIDUAL LENGTH NUMBER	ITEM NO.		FROM CUT WIRE OR SHIELD STRIP WIRE OR JACKET CIRCUIT POINT		TYIN	TERMINATION SPEC.	ITEM NO.		TO CUT WIRE OR SHIELD STRIP WIRE OR JACKET CIRCUIT POINT		TYIN	TERMINATION SPEC.	ITEM NO.	
B1162R			P32-BB	25N					J17-X*	25N				
B1163	46			225	200	48 52 845				225	200	85		7
B1163A	41		SHLD B1163	25N					E 35	25N				
B1163L			P32-G	25N					J17-Q*	25N				
B1163R			P32-G*	25N					J17-P*	25N				
B1164	46			225	200	48 52 845				225	200	85		7
B1164A	41		SHLD B1164	25N					E 36	25N				
B1164L			P32-B	25N					J17-F*	25N				
B1164R			P32-B*	25N					J17-E*	25N				
B1165	42		P98-U*	25N					TB23- 14	16N				
B1166	42		P99-P	25N					J26-S*	25N				
B1167	42		P34-C	25N					J26-X*	25N				
B1168	42		P34-B	25N					J26-Y*	25N				
B1169	42		P34-E	25N					J26-Z*	25N				
B1170	42		P34-G	25N					J26-CC	25N				
B1171	42		P34-M	25N					TB19- 3AB	17N		107		
B1172	42		P34-E*	25N					J26-R*	25N				
B1173	42		P99-K	25N					J26-DD	25N				

1> THE STD CONDUCTOR TERMINATION FIGURES ARE PER
2> DIMENSIONS ARE IN INCHES AND TWO PLACE DECIMALS.

MANNED SPACECRAFT CENTER HOUSTON, TEXAS | SIZE A | 1900943

SCALE - NONE | REV LTR AR | SHEET 141 OF 188

MIL 2089 - 4-65 WIR

GMI WIRING HARNESS B AR 1900943

CONDUCTOR INDIVIDUAL LENGTH NUMBER	ITEM NO.		FROM CUT WIRE OR SHIELD STRIP WIRE OR JACKET CIRCUIT POINT		TYIN	TERMINATION SPEC.	ITEM NO.		TO CUT WIRE OR SHIELD STRIP WIRE OR JACKET CIRCUIT POINT		TYIN	TERMINATION SPEC.	ITEM NO.	
B1174	42		P99-F	25N					J26-W*	25N				
B1175	42		P41-A	25N					TB18-83AB	16N		107		
B1176	42		P41-B	25N					P 5-C	25N				
B1177	42		P41-C	25N					P 5-D	25N				
B1178	42		P41-D	25N					P 5-E	25N				
B1179	42		P39-LL	25N					P 5-H	25N				
B1180	42		P39-MM	25N					P 5-J	25N				
B1181	42		P39-NN	25N					P 5-K	25N				
B1182	42		P39-PP	25N					P 5-L	25N				
B1183	42		P39-GG	25N					P 5-P	25N				
B1184	42		P39-HH	25N					P 5-R	25N				
B1185	42		P39-JJ	25N					P 5-S	25N				
B1186	42		P39-KK	25N					P 5-T	25N				
B1187	42		P39-CC	25N					P 5-W	25N				
B1188	42		P39-DD	25N					P 5-X	25N				
B1189	42		P39-EE	25N					P 5-Y	25N				
B1190	42		P39-FF	25N					P 5-Z	25N				
B1191	42		P39-Y*	25N					P 5-B*	25N				

1> THE STD CONDUCTOR TERMINATION FIGURES ARE PER
2> DIMENSIONS ARE IN INCHES AND TWO PLACE DECIMALS.

MANNED SPACECRAFT CENTER HOUSTON, TEXAS | SIZE A | 1900943

SCALE - NONE | REV LTR AR | SHEET 142 OF 188

MIL 2089 - 4-65 WIR

GMI WIRING HARNESS B AR 1900943

CONDUCTOR INDIVIDUAL LENGTH NUMBER	ITEM NO.		FROM CUT WIRE OR SHIELD STRIP WIRE OR JACKET CIRCUIT POINT		TYIN	TERMINATION SPEC.	ITEM NO.		TO CUT WIRE OR SHIELD STRIP WIRE OR JACKET CIRCUIT POINT		TYIN	TERMINATION SPEC.	ITEM NO.	
B1192	42		P39-Z*	25N					P 5-C*	25N				
B1193	42		P39-AA	25N					P 5-D*	25N				
B1194	42		P39-BB	25N					P 5-E*	25N				
B1195	42		P39-U*	25N					P 5-G*	25N				
B1196	42		P39-V*	25N					P 5-H*	25N				
B1197	42		P39-W*	25N					P 5-I*	25N				
B1198	42		P39-X*	25N					P 5-J*	25N				
B1199	42		P39-S*	25N					P 5-R*	25N				
B1200	42		P39-P*	25N					P 5-S*	25N				
B1201	42		P39-R*	25N					TB18-83CD	16N		107		
B1202	42		P39-T*	25N					P 5-P*	25N				
B1203	46			225	200	85		7		400	370	48 52 846		
B1203B	41		TB20- 6	16N		107			SHLD B1203	25N				
B1203L			P25-PP	25N					TB20- 8CD	16N		107		
B1203R			P25-MM	25N					TB20- 7AB	16N		107		
B1204	46			225	200	85		7		400	370	48 52 846		
B1204B	41		TB21- 3	16N		107			SHLD B1204	25N				
B1204L			P25-NN	25N					TB21- 7CD	16N		107		

1> THE STD CONDUCTOR TERMINATION FIGURES ARE PER
2> DIMENSIONS ARE IN INCHES AND TWO PLACE DECIMALS.

MANNED SPACECRAFT CENTER HOUSTON, TEXAS | SIZE A | 1900943

SCALE - NONE | REV LTR AR | SHEET 143 OF 188

MIL 2089 - 4-65 WIR

CONDUCTOR NUMBER	INDIVIDUAL LENGTH ITEM NO.	3	FROM CUT WIRE OR SHIELD STRIP WIRE OR JACKET CIRCUIT POINT	2	T I N	3	TERMINATION SPEC. 1 ITEM NO.				NO.	TO CUT WIRE OR SHIELD STRIP WIRE OR JACKET CIRCUIT POINT	2	T I N	3	TERMINATION SPEC 1 ITEM NO.				NO.
B1204R			P25-LL	25N								TB21- 4CD	16N			107				
B1205	46			225		200	85			7			400		370	48	52	846		
B1205B	41		TB21- 9	16N			107					SHLD B1205	25N							
B1205L			P25-KK	25N								TB21- 8CD	16N			107				
B1205R			P25-JJ	25N								TB21- 40CD	16N			107				
B1206	46			225		200	85						400		370	48	52	846		
B1206B	41		TB22- 27	16N			107					SHLD B1206	25N							
B1206L			P25-R*	25N								TB22- 26CD	16N			107				
B1206R			P25-P*	25N								TB22- 26AB	16N			107				
B1207	46			225		200	85						400		370	48	52	846		
B1207B	41		TB22- 27	16N			107					SHLD B1207	25N							
B1207L			P25-Q*	25N								TB22- 28CD	16N			107				
B1207R			P25-N*	25N								TB22- 28AB	16N			107				
B1208	46			225		200	85						400		370	48	52	846		
B1208B	41		TB22- 30	16N			107					SHLD B1208	25N							
B1208L			P25-M*	25N								TB22- 29CD	16N			107				
B1208R			P25-K*	25N								TB22- 29AB	16N			107				
B1209	42		P24-Z	25N								TB21- 4AB	16N			107				

1> THE STD CONDUCTOR TERMINATION FIGURES ARE PER
2> DIMENSIONS ARE IN INCHES AND TWO PLACE DECIMALS.

MANNED SPACECRAFT CENTER HOUSTON, TEXAS | SIZE A | 1900943
SCALE-NONE | REV LTR AR | SHEET 144 OF 188

MIL 2089 - 4-65 WIR

CONDUCTOR NUMBER	INDIVIDUAL LENGTH ITEM NO.	3	FROM CUT WIRE OR SHIELD STRIP WIRE OR JACKET CIRCUIT POINT	2	T I N	3	TERMINATION SPEC. 1 ITEM NO.				NO.	TO CUT WIRE OR SHIELD STRIP WIRE OR JACKET CIRCUIT POINT	2	T I N	3	TERMINATION SPEC 1 ITEM NO.				NO.
B1210	40		J26-BB	25N			157					TB12- 10	20N			111				
B1211	42		P24-K	25N								TB22- 2CD	16N			107				
B1213	42		P31-P	25N								P98-G	25N							
B1214	42		P31-R	25N								P98-C*	25N							
B1215	42		P31-U	25N								P98-H	25N							
B1216	42		P31-X	25N								P98-N	25N							
B1217	42		P31-C*	25N								P98-J	25N							
B1218	40		P92-M*	25N			157					TB 7- 4	20N			111				
B1219	46			400		370	48	52	846				225		200	85			7	
B1219A	41		SHLD B1219	25N								TB27- 22	16N			107				
B1219L			TB27- 21CD	16N			107					P65-B*	25N							
B1219R			TB27- 21AB	16N			107					P65-B	25N							
B1220	46			400		370	48	52	846				225		200	85			7	
B1220A	41		SHLD B1220	25N								TB27- 22	16N			107				
B1220L			TB27- 23CD	16N			107					P65-U*	25N							
B1220R			TB27- 23AB	16N			107					P65-U	25N							
B1221	46			400		370	48	52	846				225		200	85			7	
B1221A	41		SHLD B1221	25N								TB27- 28	16N			107				

1> THE STD CONDUCTOR TERMINATION FIGURES ARE PER
2> DIMENSIONS ARE IN INCHES AND TWO PLACE DECIMALS.

MANNED SPACECRAFT CENTER HOUSTON, TEXAS | SIZE A | 1900943
SCALE-NONE | REV LTR AR | SHEET 145 OF 188

MIL 2089 - 4-65 WIR

CONDUCTOR NUMBER	INDIVIDUAL LENGTH ITEM NO.	3	FROM CUT WIRE OR SHIELD STRIP WIRE OR JACKET CIRCUIT POINT	2	T I N	3	TERMINATION SPEC. 1 ITEM NO.				NO.	TO CUT WIRE OR SHIELD STRIP WIRE OR JACKET CIRCUIT POINT	2	T I N	3	TERMINATION SPEC 1 ITEM NO.				NO.
B1221L			TB27- 26CD	16N			107					P65-R*	25N							
B1221R			TB27- 26AB	16N			107					P65-R	25N							
B1222	46			400		370	48	52	846				225		200	85			7	
B1222A	41		SHLD B1222	25N								TB27- 22	16N			107				
B1222L			TB27- 24CD	16N			107					P65-S*	25N							
B1222R			TB27- 24AB	16N			107					P65-S	25N							
B1223	65			225		200	86	87	856				52		23	90	91		7	
B1223A	41		SHLD B1223	25N								TB27- 25CD	16N			107				
B1223E			TB27- 25AB	16N			107					P93-H1	11N			89				
B1223X			SHLD B1223									P93-H2								
B1224	65			225		200	86	87	856				52		23	90	91		7	
B1224A	41		SHLD B1224	25N								TB27- 18CD	16N			107				
B1224E			TB27- 18AB	16N			107					P70-G1	11N			89				
B1224X			SHLD B1224									P70-G2								
B1225	46			225		200	85			7			400		370	48	52	846		
B1225B	41		TB27- 28	16N			107					SHLD B1225	25N							
B1225L			P65-T*	25N								TB27- 29CD	16N			107				
B1225R			P65-T	25N								TB27- 29AB	16N			107				

1> THE STD CONDUCTOR TERMINATION FIGURES ARE PER
2> DIMENSIONS ARE IN INCHES AND TWO PLACE DECIMALS.

MANNED SPACECRAFT CENTER HOUSTON, TEXAS | SIZE A | 1900943
SCALE-NONE | REV LTR AR | SHEET 146 OF 188

MIL 2089 - 4-65 WIR

CONDUCTOR NUMBER	INDIVIDUAL LENGTH ITEM NO.	3	FROM CUT WIRE OR SHIELD STRIP WIRE OR JACKET CIRCUIT POINT	2	T I N	3	TERMINATION SPEC. 1 ITEM NO.				NO.	TO CUT WIRE OR SHIELD STRIP WIRE OR JACKET CIRCUIT POINT	2	T I N	3	TERMINATION SPEC 1 ITEM NO.				NO.
B1226	65			52		23	90	91		7			225		200	86	87	856		
B1226B	41		TB27- 27CD	16N			107					SHLD B1226	25N							
B1226E			P68-F1	11N			89					TB27- 27AB	16N			107				
B1226X			P68-F2									SHLD B1226								
B1227	41		P65-A	25N								TB23- 12	20N			111				
B1228	07			225		200	85			7			225		200	117	118	856		
B1228B	41		TB19- 39	16N			107					SHLD B1228	25N							
B1228E			TB10- 4	20N			111					TB19- 37AB	16N			107				
B1229	47			225		200	49	53	845				225		200	84			7	
B1229A	41		SHLD B1229	25N								E 27	25N							
B1229L			J17-HH	25N								P21-K*	25N							
B1229R			J17-GG	25N								P21-J*	25N							
B1230	47			225		200	84						225		200	49	53	84		
B1230B	41		E 27	25N								SHLD B1230	25N							
B1230L			P21-I*	25N								J17-KK	25N							
B1230R			P21-H*	25N								J17-JJ	25N							
B1232	49			225		200	84						225		200	50	54	84		
B1232B	41		E 26	25N								SHLD B1232	25N							

1> THE STD CONDUCTOR TERMINATION FIGURES ARE PER
2> DIMENSIONS ARE IN INCHES AND TWO PLACE DECIMALS.

MANNED SPACECRAFT CENTER HOUSTON, TEXAS | SIZE A | 1900943
SCALE-NONE | REV LTR AR | SHEET 147 OF 188

MIL 2089 - 4-65 WIR

CONDUCTOR INDIVIDUAL LENGTH NUMBER	ITEM NO.	2	FROM CUT WIRE OR SHIELD STRIP WIRE OR JACKET CIRCUIT POINT	2	T I N	2	TERMINATION SPEC. 1 ITEM NO.	NO.	TO CUT WIRE OR SHIELD STRIP WIRE OR JACKET CIRCUIT POINT	2	T I N	2	TERMINATION SPEC. 1 ITEM NO.	NO.
B1232L			P21-Z*	25N					J24-L	25N				
B1232R			P21-Y*	25N					J24-K	25N				
B1233	42		P17-BB	25N					P34-S	25N				
B1234	45			225		200	50 54 845			225		200	84 7	
B1234A	41		SHLD B1234	25N					E 30	25N				
B1234L			P21-FF	25N					J25-Q*	25N				
B1234R			P21-EE	25N					J25-P*	25N				
B1235	16		P33-C	25N					TB24- 9	40N			111	
B1236	42		TB20- 38AB	16N		107			TB24- 3	20N			111	
B1237	42		TB20- 38CD	16N		107			TB24- 7	20N			111	
B1238	178		TB23- 9	40N		179			TB24- 7	40N			179	
B1239	46			225		200	85 7			400		370	48 52 846	
B1239B	41		TB19- 21	16N		107			SHLD B1239	25N				
B1239L			P91-W*	25N					TB19- 20CD	16N			107	
B1239R			P91-W	25N					TB19- 20AB	16N			107	
B1240	46			225		200	85 7			400		370	48 52 846	
B1240B	41		TB19- 18	16N		107			SHLD B1240	25N				
B1240L			P91-V*	25N					TB19- 19CD	16N			107	

1 THE STD CONDUCTOR TERMINATION FIGURES ARE PER
2 DIMENSIONS ARE IN INCHES AND TWO PLACE DECIMALS.

MANNED SPACECRAFT CENTER HOUSTON, TEXAS | SIZE A | 1900943

SCALE - NONE | REV LTR AR | SHEET 148 OF 188

MIL 2069 - 4-63 WIR

CONDUCTOR INDIVIDUAL LENGTH NUMBER	ITEM NO.	2	FROM CUT WIRE OR SHIELD STRIP WIRE OR JACKET CIRCUIT POINT	2	T I N	2	TERMINATION SPEC. 1 ITEM NO.	NO.	TO CUT WIRE OR SHIELD STRIP WIRE OR JACKET CIRCUIT POINT	2	T I N	2	TERMINATION SPEC. 1 ITEM NO.	NO.
B1240R			P91-V	25N					TB19- 19AB	16N		107		
B1243	42		P25-Z	25N					P34-V	25N				
B1245	65			50		31	7			225		200	86 87 856	
B1245B	41		P82-BB	25N					SHLD B1245	25N				
B1245E			P58-H	11Y					P82-AA	25N				
B1245X			P58-L						SHLD B1245					
B1246	65			50		31	7			225		200	86 87 856	
B1246B	41		P82-Z*	25N					SHLD B1246	25N				
B1246E			P57-H	11Y					P82-Y*	25N				
B1246X			P57-L						SHLD B1246					
B1251	65			225		200	86 87 856			225		200	86 87 856	
B1251A	41		SHLD B1251	25N					P14-H	25N				
B1251B	41		TB27- 6A	16N		107			SHLD B1251	25N				
B1251E			P14-J	25N					TB27- 5A	16N		107		
B1252	41		P36-I*	25N					TB21- 98CD	16N		107		
B1255	42		P36-R	25N					TB22- 40CD	16N		107		
B1256	42		P34-H	25N					TB21- 4AB	16N		107		
B1257	16		P20-PP	25N					TB23- 11	20N		111		

1 THE STD CONDUCTOR TERMINATION FIGURES ARE PER
2 DIMENSIONS ARE IN INCHES AND TWO PLACE DECIMALS.

MANNED SPACECRAFT CENTER HOUSTON, TEXAS | SIZE A | 1900943

SCALE - NONE | REV LTR AR | SHEET 149 OF 188

MIL 2069 - 4-63 WIR

CONDUCTOR INDIVIDUAL LENGTH NUMBER	ITEM NO.	2	FROM CUT WIRE OR SHIELD STRIP WIRE OR JACKET CIRCUIT POINT	2	T I N	2	TERMINATION SPEC. 1 ITEM NO.	NO.	TO CUT WIRE OR SHIELD STRIP WIRE OR JACKET CIRCUIT POINT	2	T I N	2	TERMINATION SPEC. 1 ITEM NO.	NO.
B1258	16		TB21- 63AB	16N		108			P32-P*	25N				
B1259	46			225		200	85 7			400		370	48 52 846	
B1259B	41		TB27- 10	16N		107			SHLD B1259	25N				
B1259L			P25-X*	25N					TB27- 12D	16N			107	
B1259R			P25-W*	25N					TB27- 11D	16N			107	
B1260	46			225		200	85 7			400		370	48 52 846	
B1260B	41		TB27- 13	16N		107			SHLD B1260	25N				
B1260L			P25-BB	25N					TB27- 14A	16N			107	
B1260R			P25-AA	25N					TB27- 15A	16N			107	
B1261	46			225		200	85 7			400		370	48 52 846	
B1261B	41		TB27- 10	16N		107			SHLD B1261	25N				
B1261L			P26-A*	25N					TB27- 9C	16N			107	
B1261R			P26-Z	25N					TB27- 8C	16N			107	
B1262	46			225		200	85 7			400		370	48 52 846	
B1262B	41		TB27- 4	16N		107			SHLD B1262	25N				
B1262L			P26-R*	25N					TB27- 5D	16N			107	
B1262R			P26-Q*	25N					TB27- 3D	16N			107	
B1263			DELETED											

1 THE STD CONDUCTOR TERMINATION FIGURES ARE PER
2 DIMENSIONS ARE IN INCHES AND TWO PLACE DECIMALS.

MANNED SPACECRAFT CENTER HOUSTON, TEXAS | SIZE A | 1900943

SCALE - NONE | REV LTR AR | SHEET 150 OF 188

MIL 2069 - 4-63 WIR

CONDUCTOR INDIVIDUAL LENGTH NUMBER	ITEM NO.	2	FROM CUT WIRE OR SHIELD STRIP WIRE OR JACKET CIRCUIT POINT	2	T I N	2	TERMINATION SPEC. 1 ITEM NO.	NO.	TO CUT WIRE OR SHIELD STRIP WIRE OR JACKET CIRCUIT POINT	2	T I N	2	TERMINATION SPEC. 1 ITEM NO.	NO.
B1263B			DELETED											
B1263L			DELETED											
B1263R			DELETED											
B1264	46			225		200	85 7			400		370	48 52 846	
B1264B	41		TB27- 10	16N		107			SHLD B1264	25N				
B1264L			P26-MM	25N					TB27- 9B	16N		107		
B1264R			P26-LL	25N					TB27- 8B	16N		107		
B1265	46			225		200	85 7			400		370	48 52 846	
B1265B	41		TB19- 21	16N		107			SHLD B1265	25N				
B1265L			P 1-D	25N					TB19- 20CD	16N		107		
B1265R			P 1-B	25N					TB19- 20AB	16N		107		
B1266	07			225		200	85 7			225		200	117 118 856	
B1266B	41		TB20- 9	16N		107			SHLD B1266	25N				
B1266K			TB 5- 2	20N		111			TB20- 10AB	16N		107		
B1267	65			225		200	86 87 856			225		200	86 87 856	
B1267A	41		SHLD B1267	25N					P14-V	25N				
B1267B	41		TB17- 24CD	16N		107			SHLD B1267	25N				
B1267E			P14-U	25N					TB17- 24AB	16N		107		

1 THE STD CONDUCTOR TERMINATION FIGURES ARE PER
2 DIMENSIONS ARE IN INCHES AND TWO PLACE DECIMALS.

MANNED SPACECRAFT CENTER HOUSTON, TEXAS | SIZE A | 1900943

SCALE - NONE | REV LTR AR | SHEET 151 OF 188

MIL 2069 - 4-63 WIR

CONDUCTOR NUMBER	ITEM NO.	INDIVIDUAL LENGTH (2)	FROM CIRCUIT POINT (CUT WIRE OR SHIELD / STRIP WIRE OR JACKET) (2)	TIN (2)	TERMINATION SPEC. (1)	ITEM NO.	NO.	TO CIRCUIT POINT (CUT WIRE OR SHIELD / STRIP WIRE OR JACKET) (2)	TIN (2)	TERMINATION SPEC. (1)	ITEM NO.	NO.
B1268	65			225	200	86 87 856			225	200	86 87 856	
B1268A	41		SHLD B1268	25N				P14-A*	25N			
B1268B	41		TB17- 4CD	16N		107		SHLD B1268	25N			
B1268E			P14-B*	25N				TB17- 4AB	16N		107	
B1269	40		P23-A	25N				TB25- 16	20N		111	
B1270	42		J24-AA	25N				P37-R*	25N			
B1271	42		J24-Z*	25N				P37-K*	25N			
B1272	65			225	200	86 87 856			225	200	86 87 856	
B1272A	41		SHLD B1272	25N				P14-N	25N			
B1272B	41		TB17- 5CD	16N		107		SHLD B1272	25N			
B1272E			P14-M	25N				TB17- 5AB	16N		107	
B1273	65			225	200	86 87 856			225	200	86 87 856	
B1273A	41		SHLD B1273	25N				P14-H*	25N			
B1273B	41		TB17- 7CD	16N		107		SHLD B1273	25N			
B1273E			P14-I*	25N				TB17- 7AB	16N		107	
B1274	65			225	200	86 87 856			225	200	86 87 856	
B1274A	41		SHLD B1274	25N				P15-Y	25N			
B1274B	41		TB17- 3CD	16N		107		SHLD B1274	25N			

1. THE STD CONDUCTOR TERMINATION FIGURES ARE PER
2. DIMENSIONS ARE IN INCHES AND TWO PLACE DECIMALS.

MANNED SPACECRAFT CENTER HOUSTON, TEXAS | SIZE A | 1900943

SCALE - NONE | REV LTR AR | SHEET 152 OF 188

MIL 2049 - 4-63 WIN

CONDUCTOR NUMBER	ITEM NO.	INDIVIDUAL LENGTH (2)	FROM CIRCUIT POINT (CUT WIRE OR SHIELD / STRIP WIRE OR JACKET) (2)	TIN (2)	TERMINATION SPEC. (1)	ITEM NO.	NO.	TO CIRCUIT POINT (CUT WIRE OR SHIELD / STRIP WIRE OR JACKET) (2)	TIN (2)	TERMINATION SPEC. (1)	ITEM NO.	NO.
B1274E			P15-Z	25N				TB17- 3AB	16N		107	
B1275	42		P25-E*	25N				J16-CC	25N			
B1276	42		P25-F*	25N				J16-BB	25N			
B1277	42		P25-G*	25N				J16-FF	25N			
B1278	42		P25-H*	25N				J16-EE	25N			
B1279	42		P25-I*	25N				J16-X*	25N			
B1280	42		P25-J*	25N				J16-Y*	25N			
B1283	42		J18-HH	25N				P96-T	25N			
B1284	42		J21-V*	25N				TB21- 5CD	16N		107	
B1285	46			225	200	85 7			400	370	48 52 846	
B1285B	41		TB19- 97	16N		107		SHLD B1285	25N			
B1285L			P26-I*	25N		*		TB19- 98CD	16N		107	
B1285R			P26-H*	25N				TB19- 98AB	16N		107	
B1286	42		J18-J*	25N				P92-Z	25N			
B1287	46			225	200	85 7			400	370	48 52 846	
B1287B	41		TB19- 15	16N		107		SHLD B1287	25N			
B1287L			J17-FF	25N				TB19- 16CD	16N		107	
B1287R			J17-EE	25N				TB19- 16AB	16N		107	

1. THE STD CONDUCTOR TERMINATION FIGURES ARE PER
2. DIMENSIONS ARE IN INCHES AND TWO PLACE DECIMALS.

MANNED SPACECRAFT CENTER HOUSTON, TEXAS | SIZE A | 1900943

SCALE - NONE | REV LTR AR | SHEET 153 OF 188

MIL 2049 - 4-63 WIN

CONDUCTOR NUMBER	ITEM NO.	INDIVIDUAL LENGTH (2)	FROM CIRCUIT POINT (CUT WIRE OR SHIELD / STRIP WIRE OR JACKET) (2)	TIN (2)	TERMINATION SPEC. (1)	ITEM NO.	NO.	TO CIRCUIT POINT (CUT WIRE OR SHIELD / STRIP WIRE OR JACKET) (2)	TIN (2)	TERMINATION SPEC. (1)	ITEM NO.	NO.
B1289	42		J22-E*	25N				TB18- 97CD	16N		107	
B1290	41		J25-EE	25N				P92-K	25N			
B1291	41		J25-X*	25N				P92-E	25N			
B1292	42		P25-T*	25N				TB19- 40CD	16N		107	
B1293	41		TB22- 95AB	16N		107		P99-Z	25N			
B1294	42		J18-DD	25N				P99-H	25N			
B1295	42		J18-EE	25N				P99-G	25N			
B1297	42		J21-T	25N				P99-GG	25N			
B1298	42		J21-CC	25N				P98-PP	25N			
B1302	46			225	200	85 7			400	370	48 52 846	
B1302B	41		TB19- 18	16N		107		SHLD B1302	25N			
B1302L			P 3-D	25N				TB19- 19CD	16N		107	
B1302R			P 3-B	25N				TB19- 19AB	16N		107	
B1304	46			225	200	48 52 845			225	200	85 7	
B1304A	41		SHLD B1304	25N				E 36	25N			
B1304L			P32-A*	25N				J17-H*	25N			
B1304R			P32-A	25N				J17-G*	25N			
B1305	42		J26-V*	25N				P34-G*	25N			

1. THE STD CONDUCTOR TERMINATION FIGURES ARE PER
2. DIMENSIONS ARE IN INCHES AND TWO PLACE DECIMALS.

MANNED SPACECRAFT CENTER HOUSTON, TEXAS | SIZE A | 1900943

SCALE - NONE | REV LTR AR | SHEET 154 OF 188

MIL 2049 - 4-63 WIN

CONDUCTOR NUMBER	ITEM NO.	INDIVIDUAL LENGTH (2)	FROM CIRCUIT POINT (CUT WIRE OR SHIELD / STRIP WIRE OR JACKET) (2)	TIN (2)	TERMINATION SPEC. (1)	ITEM NO.	NO.	TO CIRCUIT POINT (CUT WIRE OR SHIELD / STRIP WIRE OR JACKET) (2)	TIN (2)	TERMINATION SPEC. (1)	ITEM NO.	NO.
B1307	42		J26-FF	25N				P99-U	25N			
B1308	42		P25-S*	25N				TB22- 2AB	16N		107	
B1309			DELETED									
B1309B			DELETED									
B1309L			DELETED									
B1309R			DELETED									
B1310			DELETED									
B1310B			DELETED									
B1310L			DELETED									
B1310R			DELETED									
B1311	46			225		85 7A			400		48 52 84 6	
B1311B	41	800	TB22- 36	17N	107			SHLD B1311	25N			
B1311L			P96-D*	25N				TB22- 35CD	17N		107	
B1311R			P96-E*	25N				TB22- 35AB	17N		107	
B1312	99			225		84 7A			400		102 104 83 6	
B1312B	41	800	TB20- 15	17N	108			SHLD B1312	25N			
B1312L			P21-P*	25N				TB20- 16CD	17N		108	
B1312R			P21-N*	25N				TB20- 16AB	17N		108	

1. THE STD CONDUCTOR TERMINATION FIGURES ARE PER
2. DIMENSIONS ARE IN INCHES AND TWO PLACE DECIMALS.

MANNED SPACECRAFT CENTER HOUSTON, TEXAS | SIZE A | 1900943

SCALE - NONE | REV LTR AR | SHEET 155 OF 188

MIL 2049 - 4-63 WIN

CONDUCTOR NUMBER	INDIVIDUAL LENGTH ITEM NO.	INDIVIDUAL LENGTH 2	FROM CIRCUIT POINT	FROM 2	FROM TYPE	FROM 2	FROM TERMINATION SPEC. 1	FROM TERMINATION ITEM NO.	FROM TERMINATION NO.	TO CIRCUIT POINT	TO 2	TO TYPE	TO 2	TO TERMINATION SPEC. 1	TO TERMINATION ITEM NO.	TO TERMINATION NO.
B1312Y			P21-Q*	25N						TB19- 22AB	17N		108			
B1313	46			225		85		7A			400		48	52 84 6		
B1313B	41	800	TB19- 33	17N		107				SHLD B1313	25N					
B1313L			P20-Z	25N						TB19- 34	17N		107			
B1313R			P20-Y	25N						TB19- 35	17N		107			
B1314	99			225		84		7A			400		102	104 83 6		
B1314B	41	800	TB20- 15	17N		108				SHLD B1314	25N					
B1314L			P33-J	25N						TB20- 16CD	17N		108			
B1314R			P33-H	25N						TB20- 16AB	17N		108			
B1314Y			P33-G	25N						TB19- 22AB	17N		108			
B1315	46			225		85		7A			400		48	52 84 6		
B1315B	41	800	TB20- 91	17N		107				SHLD B1315	25N					
B1315L			P26-K*	25N						TB20- 92CD	17N		107			
B1315R			P26-J*	25N						TB20- 92AB	17N		107			
B1316	46			225		85		7A			400		48	52 84 6		
B1316B	41	800	TB20- 94	17		107				SHLD B1316	25N					
B1316L			P26-P	25N						TB20- 93CD	17N		107			
B1316R			P26-N	25N						TB20- 93AB	17N		107			

1 THE STD CONDUCTOR TERMINATION FIGURES ARE PER
2 DIMENSIONS ARE IN INCHES AND TWO PLACE DECIMALS.

MANNED SPACECRAFT CENTER HOUSTON, TEXAS | SIZE A | 1900943
SCALE-NONE | REV LTR AR | SHEET 156 OF 188

MIL 2049 - 4.93 WIR

CONDUCTOR NUMBER	INDIVIDUAL LENGTH ITEM NO.	INDIVIDUAL LENGTH 2	FROM CIRCUIT POINT	FROM 2	FROM TYPE	FROM 2	FROM TERMINATION SPEC. 1	FROM TERMINATION ITEM NO.	FROM TERMINATION NO.	TO CIRCUIT POINT	TO 2	TO TYPE	TO 2	TO TERMINATION SPEC. 1	TO TERMINATION ITEM NO.	TO TERMINATION NO.
B1317	46			225		85		7A			400		48	52 84 6		
B1317B	41	800	TB19- 33	17		107				SHLD B1317	25N					
B1317L			P33-L	25N						TB19- 32CD	17N		107			
B1317R			P33-K	25N						TB19- 32AB	17N		107			
B1318	46			400		85		7A			400		48	52 84 6		
B1318B	41	800	TB19- 33	17N		107				SHLD B1318	25N					
B1318L			TB18- 8CD	17N		107				TB19- 32CD	17N		107			
B1318R			TB18- 8AB	17N		107				TB19- 32AB	17N		107			
B1319	46			400		85		7A			400		48	52 84 6		
B1319B	41	800	TB19- 30	17N		107				SHLD B1319	25N					
B1319L			TB19- 6CD	17N		107				TB19- 31CD	17N		107			
B1319R			TB19- 6AB	17N		107				TB19- 31AB	17N		107			
B1320	42		TB19- 22CD	17N		107				TB20- 16CD	17N		107			
B1321	42		TB20- 11AB	17N		107				TB18- 43	17N		107			
B1322	42		TB18- 48	17N		107				TB19- 48	17N		107			
B1323	42		TB19- 41	17N		107				TB20- 44	17N		107			
B1324	42		TB20- 47	17N		107				TB21- 48	17N		107			
B1325	42		TB20- 47	17N		107				TB22- 48	17N		107			

1 THE STD CONDUCTOR TERMINATION FIGURES ARE PER
2 DIMENSIONS ARE IN INCHES AND TWO PLACE DECIMALS.

MANNED SPACECRAFT CENTER HOUSTON, TEXAS | SIZE A | 1900943
SCALE-NONE | REV LTR AR | SHEET 157 OF 188

MIL 2049 - 4.93 WIR

CONDUCTOR NUMBER	INDIVIDUAL LENGTH ITEM NO.	INDIVIDUAL LENGTH 2	FROM CIRCUIT POINT	FROM 2	FROM TYPE	FROM 2	FROM TERMINATION SPEC. 1	FROM TERMINATION ITEM NO.	FROM TERMINATION NO.	TO CIRCUIT POINT	TO 2	TO TYPE	TO 2	TO TERMINATION SPEC. 1	TO TERMINATION ITEM NO.	TO TERMINATION NO.
B1326	42		TB20- 44	17N		107				TB21- 44CD	17N		107			
B1327	42		P 5-U*	25N						P39-Q*	25N					
B1328	42		J22-F*	25N						TB18-100AB	17N		107			
B1329	42		J22-G*	25N						TB18-100CD	17N		107			
B1330	42		J22-H*	25N						TB20- 7AB	17N		107			
B1331	42		J22-J*	25N						TB21- 40CD	17N		107			
B1332	42		P36-JJ	25N						TB21- 40CD	17N		107			
B1333	41		P45-D	25N						P45-E	25N					
B1334	41		P45-G	25N						P45-F	25N					
B1335	41		P43-D	25N						P43-E	25N					
B1336	41		P43-G	25N						P43-F	25N					
B1337	42		TB24- 7	20N		111				TB20- 37CD	17N		107			
B1338	46			225		85		7A			400		48	52 84 6		
B1338B	41	800	TB19- 36	17N		107				SHLD B1338	25N					
B1338L			U17-DD	25N						TB19- 34	17N		107			
B1338R			U17-CC	25N						TB19- 35	17N		107			
B1339	16		P20-CC	25N						TB19- 40AB	17N		108			
B1340	16		P34-P	25N						TB19- 40AB	17N		108			

1 THE STD CONDUCTOR TERMINATION FIGURES ARE PER
2 DIMENSIONS ARE IN INCHES AND TWO PLACE DECIMALS.

MANNED SPACECRAFT CENTER HOUSTON, TEXAS | SIZE A | 1900943
SCALE-NONE | REV LTR AR | SHEET 158 OF 188

MIL 2049 - 4.93 WIR

CONDUCTOR NUMBER	INDIVIDUAL LENGTH ITEM NO.	INDIVIDUAL LENGTH 2	FROM CIRCUIT POINT	FROM 2	FROM TYPE	FROM 2	FROM TERMINATION SPEC. 1	FROM TERMINATION ITEM NO.	FROM TERMINATION NO.	TO CIRCUIT POINT	TO 2	TO TYPE	TO 2	TO TERMINATION SPEC. 1	TO TERMINATION ITEM NO.	TO TERMINATION NO.
B1341	16		P25-S	25N						TB19- 40AB	17N		108			
B1344	41		P82-M*	25N						J 3-EE	25N					
B1345	41		P82-N*	25N						J 3-W*	25N					
B1346	41		P82-P*	25N						J 3-FF	25N					
B1347	41		P82-R*	25N						J 3-GG	25N					
B1348			DELETE													
B1348B			DELETE													
B1348L			DELETE													
B1348R			DELETE													
B1349	46			225		85		7A			400		48	52 84 6		
B1349B	41	800	TB19- 30	17N		107				SHLD B1349	25N					
B1349L			P35-V	25N						TB19- 31CD	17N		107			
B1349R			P35-U	25N						TB19- 31AB	17N		107			
B1350	42		P35-Z*	25N						J25-V*	25N					
B1351	45			225		84		7A			300		50	54 84 6		
B1351B	41		E 50	25N						SHLD B1351	25N					
B1351L			P17-V	25N						TB 2- 3	20N		111			
B1351R			P17-U	25N						TB 2- 5	20N		111			

1 THE STD CONDUCTOR TERMINATION FIGURES ARE PER
2 DIMENSIONS ARE IN INCHES AND TWO PLACE DECIMALS.

MANNED SPACECRAFT CENTER HOUSTON, TEXAS | SIZE A | 1900943
SCALE-NONE | REV LTR AR | SHEET 159 OF 188

MIL 2049 - 4.93 WIR

CONDUCTOR INDIVIDUAL LENGTH NUMBER	ITEM NO.	1	FROM CUT WIRE OR SHIELD STRIP WIRE OR JACKET CIRCUIT POINT	2	TYPE	3	TERMINATION SPEC. ITEM NO.	1	NO.	TO CUT WIRE OR SHIELD STRIP WIRE OR JACKET CIRCUIT POINT	2	TYPE	3	TERMINATION SPEC. ITEM NO.	1	NO.
B1352	41		J17-LL	25	N					TB20- 4AB	16	N		107		
B1353	65			23			91	90			225			86 87 85 6		
B1353B	41	800	TB25- 11	20	N		111			SHLD B1353	25	N				
B1353E			P62-A1	12	N		89			TB25- 11	20	N		111		
B1353X			P62-A2							SHLD B1353						
B1354	46			225			85		7A		400			48 52 84 6		
B1354B	41	800	TB27- 1	17	N		107			SHLD B1354	25	N				
B1354L			P37-X	25	N					TB27- 2B	17	N		107		
B1354R			P37-Y	25	N					TB27- 2A	17	N		107		
B1355	7			225			120		7A		225			117 118 85 6		
B1355B	41	800	TB27- 1	17	N		107			SHLD B1355	25	N				
B1355W			P37-U	25	N					TB27- 2D	17	N		107		
B1356	7			225			120		7A		225			117 118 85 6		
B1356B	41	800	TB27- 1	17	N		107			SHLD B1356	25	N				
B1356W			P37-V	25	N					TB27- 2C	17	N		107		
B1357	7			225			120		7A		225			117 118 85 6		
B1357B	41	800	TB27- 4	17	N		107			SHLD B1357	25	N				
B1357W			P37-S	25	N					TB27- 3B	17	N		107		

1> THE STD CONDUCTOR TERMINATION FIGURES ARE PER
2> DIMENSIONS ARE IN INCHES AND TWO PLACE DECIMALS.

MANNED SPACECRAFT CENTER HOUSTON, TEXAS | SIZE A | 1900943
SCALE - NONE | REV LTR AR | SHEET 160 OF 188

MIL 2049 - 4-63 WIN

CONDUCTOR INDIVIDUAL LENGTH NUMBER	ITEM NO.	1	FROM CUT WIRE OR SHIELD STRIP WIRE OR JACKET CIRCUIT POINT	2	TYPE	3	TERMINATION SPEC. ITEM NO.	1	NO.	TO CUT WIRE OR SHIELD STRIP WIRE OR JACKET CIRCUIT POINT	2	TYPE	3	TERMINATION SPEC. ITEM NO.	1	NO.
B1358	7			225			120		7A		225			117 118 85 6		
B1358B	41	800	TB27- 4	17	N		107			SHLD B1358	25	N				
B1358W			P37-T	25	N					TB27- 3A	17	N		107		
B1359	41		TB19- 50CD	17	N		107			TB27- 2B	17	N		107		
B1360	16		P90-H	25	N					TB25- 7	20	N		111		
B1361			DELETE													
B1362	46			225			85		7A		400			48 52 84 6		
B1362B	41	800	TB19- 78	17	N		107			SHLD B1362	25	N				
B1362L			J25-U*	25	N					TB19- 77CD	17	N		107		
B1362R			J25-T*	25	N					TB19- 77AB	17	N		107		
B1363	42		J18-CC	25	N					TB22- 95AB	17	N		107		
B1364	41		J16-F*	25	N					TB22- 96	17	N		107		
B1365	41		P35-Y*	25	N					TB22- 96	17	N		107		
B1366	42		P92-G	25	N					J25-FF	25	N				
B1367	42		P92-H	25	N					J25-BB	25	N				
B1368	42		P92-J	25	N					J25-AA	25	N				
B1369	42		P34-D	25	N					P20-A*	25	N				
B1370	42		P37-FF	25	N					TB19- 2AB	17	N		107		

1> THE STD CONDUCTOR TERMINATION FIGURES ARE PER
2> DIMENSIONS ARE IN INCHES AND TWO PLACE DECIMALS.

MANNED SPACECRAFT CENTER HOUSTON, TEXAS | SIZE A | 1900943
SCALE - NONE | REV LTR AR | SHEET 161 OF 188

MIL 2049 - 4-63 WIN

CONDUCTOR INDIVIDUAL LENGTH NUMBER	ITEM NO.	1	FROM CUT WIRE OR SHIELD STRIP WIRE OR JACKET CIRCUIT POINT	2	TYPE	3	TERMINATION SPEC. ITEM NO.	1	NO.	TO CUT WIRE OR SHIELD STRIP WIRE OR JACKET CIRCUIT POINT	2	TYPE	3	TERMINATION SPEC. ITEM NO.	1	NO.
B1371	41		P24-E*	25	N					TB 8- 5	20	N		111		
B1372	41		P34-Y	25	N					TB 8- 4	20	N		111		
B1373	41		P38-C	25	N					TB20- 11CD	17	N		107		
B1376	46			225			85		7A		400			48 52 84 6		
B1376B	41	800	TB18- 39	17	N		107			SHLD B1376	25	N				
B1376L			P26-HH	25	N					TB18- 40CD	17	N		107		
B1376R			P26-GG	25	N					TB18- 40AB	17	N		107		
B1377	42		P20-HH	25	N					TB22- 40CD	17	N		107		
B1378	42		TB21- 40AB	17	N		107			TB21- 5AB	17	N		107		
B1379	42		P96-M*	25	N					TB21- 5AB	17	N		107		
B1380	42		P96-P*	25	N					P24-T	17	N				
B1381	42		P24-U	25	N					TB21- 5AB	17	N		107		
B1382	40		J26-X	20	N					TB25- 12	20	N		111		
B1383	40		J26-Y	20	N					TB25- 12	20	N		111		
B1384	40		J26-Z	20	N					TB25- 13	20	N		111		
B1385	40		TB13- 2	20	N		111			TB25- 13	20	N		111		
B1386	42		J23-EE	25	N					TB19- 89AB	17	N		107		
B1387	42		J23-FF	25	N					TB19- 89CD	17	N		107		

1> THE STD CONDUCTOR TERMINATION FIGURES ARE PER
2> DIMENSIONS ARE IN INCHES AND TWO PLACE DECIMALS.

MANNED SPACECRAFT CENTER HOUSTON, TEXAS | SIZE A | 1900943
SCALE - NONE | REV LTR AR | SHEET 162 OF 188

MIL 2049 - 4-63 WIN

CONDUCTOR INDIVIDUAL LENGTH NUMBER	ITEM NO.	1	FROM CUT WIRE OR SHIELD STRIP WIRE OR JACKET CIRCUIT POINT	2	TYPE	3	TERMINATION SPEC. ITEM NO.	1	NO.	TO CUT WIRE OR SHIELD STRIP WIRE OR JACKET CIRCUIT POINT	2	TYPE	3	TERMINATION SPEC. ITEM NO.	1	NO.
B1388	42		J23-GG	25	N					TB19- 90AB	17	N		107		
B1389	42		J23-HH	25	N					TB19- 90CD	17	N		107		
B1390	42		J23-U*	25	N					TB19- 92AB	17	N		107		
B1391	42		J23-V*	25	N					TB19- 92CD	17	N		107		
B1392	42		J23-W*	25	N					TB19- 93AB	17	N		107		
B1393	42		J23-X*	25	N					TB19- 93CD	17	N		107		
B1394	42		J23-AA	25	N					TB19- 95AB	17	N		107		
B1395	42		J23-BB	25	N					TB19- 95CD	17	N		107		
B1396	42		J23-CC	25	N					TB19- 96AB	17	N		107		
B1397	42		J23-DD	25	N					TB19- 96CD	17	N		107		
B1398	65			23			91	90			225			86 87 85 6		
B1398B			DELETE													
B1398E	65		P52-M	12	N		89			P65-J*	12	N				
B1398X			P52-L							SHLD B1398						
B1399	42		P99-JJ	25	N					J16-LL	25	N				
B1400	42		P99-MM	25	N					J16-MM	25	N				
B1401	42		P99-LL	25	N					J16-PP	25	N				
B1402	42		P99-KK	25	N					J16-NN	25	N				

1> THE STD CONDUCTOR TERMINATION FIGURES ARE PER
2> DIMENSIONS ARE IN INCHES AND TWO PLACE DECIMALS.

MANNED SPACECRAFT CENTER HOUSTON, TEXAS | SIZE A | 1900943
SCALE - NONE | REV LTR AR | SHEET 163 OF 188

MIL 2049 - 4-63 WIN

CONDUCTOR INDIVIDUAL LENGTH NUMBER	ITEM NO.	2	FROM CUT WIRE OR SHIELD STRIP WIRE OR JACKET CIRCUIT POINT	2	T I N	2	TERMINATION SPEC. 1 ITEM NO.	NO.	TO CUT WIRE OR SHIELD STRIP WIRE OR JACKET CIRCUIT POINT	2	T I N	2	TERMINATION SPEC. 1 ITEM NO.	NO.
B1403	41		J25-B	25	N				TB23- 4	20	N		111	
B1404	41		J17-B	25	N				TB23- 1	20	N		111	
B1405	41		J24-B	25	N				TB23- 4	20	N		111	
B1406	41		J16-B	25	N				TB23- 1	20	N		111	
B1408	41		J26-K*	25	N				TB21- 4AB	17	N		107	
B1409	41		J16-KK	25	N				TB 9- 6	20	N		111	
B1410	16		J 4-T*	25	N				TB23- 16	20	N		111	
B1411	46			225		200	85	7		400		370	48 52 84 6	
B1411B	41		TB17-100	16	N		107		SHLD B1411	25	N			
B1411L			P85-LL	25	N				TB17- 99CD	16	N		107	
B1411R			P85-KK	25	N				TB17- 99AB	16	N		107	
B1412	46			225		200	85	7		400		370	48 52 84 6	
B1412B	41		TB19- 33	16	N		107		SHLD B1412	25	N			
B1412L			P35-R	25	N				TB19- 32CD	16	N		107	
B1412R			P35-P	25	N				TB19- 32AB	16	N		107	
B1413	46			225		200	85	7		400		370	48 52 84 6	
B1413B	41		TB18- 36	16	N		107		SHLD B1413	25	N			
B1413L			P32-MM	25	N				TB18- 35CD	16	N		107	

1 THE STD CONDUCTOR TERMINATION FIGURES ARE PER
2 DIMENSIONS ARE IN INCHES AND TWO PLACE DECIMALS.

MANNED SPACECRAFT CENTER HOUSTON, TEXAS | SIZE A | 1900943
SCALE - NONE | REV LTR AR | SHEET 164 OF 188

MIL 2089 - 4-63 WIR

CONDUCTOR INDIVIDUAL LENGTH NUMBER	ITEM NO.	2	FROM CUT WIRE OR SHIELD STRIP WIRE OR JACKET CIRCUIT POINT	2	T I N	2	TERMINATION SPEC. 1 ITEM NO.	NO.	TO CUT WIRE OR SHIELD STRIP WIRE OR JACKET CIRCUIT POINT	2	T I N	2	TERMINATION SPEC. 1 ITEM NO.	NO.
B1413R			P32-PP	25	N				TB18- 35AB	16	N		107	
B1414	46			225		200	85	7		400		370	48 52 84 6	
B1414B	41		TB18- 30	16	N		107		SHLD B1414	25	N			
B1414L			P32-FF	25	N				TB18- 31CD	16	N		107	
B1414R			P32-NN	25	N				TB18- 31AB	16	N		107	
B1415	46			225		200	85	7		400		370	48 52 84 6	
B1415B	41		TB18- 33	16	N		107		SHLD B1415	25	N			
B1415L			P32-Z	25	N				TB18- 32CD	16	N		107	
B1415R			P32-Y	25	N				TB18- 32AB	16	N		107	
B1416	42		P33-M	25	N				P34-Z*	25	N			
B1417	42		P33-N	25	N				P34-AA	25	N			
B1418	42		P33-P	25	N				P34-BB	25	N			
B1419	42		P33-R	25	N				J22-K	25	N			
B1420	42		J22-R	25	N				TB21- 63CD	16	N		107	
B1421	42		J22-P	25	N				TB21- 60CD	16	N		107	
B1422	42		J22-M	25	N				TB21- 56	16	N		107	
B1425	41		J 3-D*	25	N				TB23- 15	20	N		111	
B1426	41		J4-U	25	N				TB23- 16	20	N		111	

1 THE STD CONDUCTOR TERMINATION FIGURES ARE PER
2 DIMENSIONS ARE IN INCHES AND TWO PLACE DECIMALS.

MANNED SPACECRAFT CENTER HOUSTON, TEXAS | SIZE A | 1900943
SCALE - NONE | REV LTR AR | SHEET 165 OF 188

MIL 2089 - 4-63 WIR

CONDUCTOR INDIVIDUAL LENGTH NUMBER	ITEM NO.	2	FROM CUT WIRE OR SHIELD STRIP WIRE OR JACKET CIRCUIT POINT	2	T I N	2	TERMINATION SPEC. 1 ITEM NO.	NO.	TO CUT WIRE OR SHIELD STRIP WIRE OR JACKET CIRCUIT POINT	2	T I N	2	TERMINATION SPEC. 1 ITEM NO.	NO.
B1427	41		J18-B	25	N				TB23- 2	20	N		111	
B1428	41		J19-J*	25	N				TB23- 2	20	N		111	
B1429	41		J20-H	25	N				TB23- 3	20	N		111	
B1430	41		J21-B	25	N				TB23- 3	20	N		111	
B1431	41		J26-B	25	N				TB23- 5	20	N		111	
B1432	42		P98-F	25	N				TB17- 89AB	16	N		107	
B1433	41		TB12- 10	20	N		111		TB17- 89CD	16	N		107	
B1434			DELETED											
B1435			DELETED											
B1436			DELETED											
B1437			DELETED											
B1438			DELETED											
B1439			DELETED											
B1440			DELETED											
B1441			DELETED											
B1442	16		E 25	25	N				E 27	25	N			
B1443	16		E 26	25	N				E 27	25	N			
B1444	16		TB23- 25	20	N		111		E 27	25	N			

1 THE STD CONDUCTOR TERMINATION FIGURES ARE PER
2 DIMENSIONS ARE IN INCHES AND TWO PLACE DECIMALS.

MANNED SPACECRAFT CENTER HOUSTON, TEXAS | SIZE A | 1900943
SCALE - NONE | REV LTR AR | SHEET 166 OF 188

MIL 2089 - 4-63 WIR

CONDUCTOR INDIVIDUAL LENGTH NUMBER	ITEM NO.	2	FROM CUT WIRE OR SHIELD STRIP WIRE OR JACKET CIRCUIT POINT	2	T I N	2	TERMINATION SPEC. 1 ITEM NO.	NO.	TO CUT WIRE OR SHIELD STRIP WIRE OR JACKET CIRCUIT POINT	2	T I N	2	TERMINATION SPEC. 1 ITEM NO.	NO.
B1445	16		E 28	25	N				E 31	25	N			
B1446	16		E 29	25	N				E 31	25	N			
B1447	16		E 30	25	N				E 31	25	N			
B1448	16		TB23- 25	20	N		111		E 31	25	N			
B1449	16		TB23- 23	20	N		111		E 32	25	N			
B1450	16		TB23- 22	20	N		111		E 33	25	N			
B1451	16		E 34	25	N				E 37	25	N			
B1452	16		E 35	25	N				E 37	25	N			
B1453	16		E 36	25	N				E 37	25	N			
B1454	16		TB23- 24	20	N		111		E 37	25	N			
B1455	16		TB23- 23	20	N		111		E 38	25	N			
B1456	16		TB 4- 6	20	N		111		E 39	25	N			
B1457	16		E 40	25	N				E 42	25	N			
B1458	16		E 41	25	N				E 42	25	N			
B1459	16		TB23- 19	20	N		111		E 42	25	N			
B1460	16		E 43	25	N				E 54	25	N			
B1461	16		TB 9- 10	20	N		111		E 44	25	N			
B1462	16		E 45	25	N				TB 6- 7	20	N		111	

1 THE STD CONDUCTOR TERMINATION FIGURES ARE PER
2 DIMENSIONS ARE IN INCHES AND TWO PLACE DECIMALS.

MANNED SPACECRAFT CENTER HOUSTON, TEXAS | SIZE A | 1900943
SCALE - NONE | REV LTR AR | SHEET 167 OF 188

MIL 2089 - 4-63 WIR

GMI WIRING HARNESS B AR 1900943

CONDUCTOR INDIVIDUAL LENGTH NUMBER	ITEM NO.	2	FROM CUT WIRE OR SHIELD STRIP WIRE OR JACKET CIRCUIT POINT	2	T I N	2	TERMINATION SPEC. 1 ITEM NO.						NO.	TO CUT WIRE OR SHIELD STRIP WIRE OR JACKET CIRCUIT POINT	2	T I N	2	TERMINATION SPEC 1 ITEM NO.						NO.
B1463	16		TB11- 6	20N			111							E 46	25N										
B1464	16		E 47	25N										E 58	25N										
B1465	16		E 48	25N										E 31	25N										
B1466	42		J22-M	25N										TB20- 5AB	16N			107							
B1467	41		J18-C	25N										TB 1- 6	25N			111							
B1468	46			225		200	85				7				400		370	48	52	84	6				
B1468B	41		TB20- 69	16N			107							SHLD B1468											
B1468L			P99-X*	25N										TB20- 70	16N			107							
B1468R			P99-Y*	25N										TB20- 71	16N			107							
B1469	46			225		200	85				7				225		200	48	52	84	5				
B1469B	41		E 30	25N										SHLD B1469											
B1469L			P99-A	25N										P21-V	25N										
B1469R			P99-B	25N										P21-W	25N										
B1470	16		E 49	25N										E 51	25N										
B1471	16		TB 2- 7	20N			111							E 51	25N										
B1472	16		E 50	25N										E 51	25N										
B1473	16		E 52	25N										E 54	25N										
B1474	16		TB 4- 5	20N			111							E 54	25N										

1> THE STD CONDUCTOR TERMINATION FIGURES ARE PER
2> DIMENSIONS ARE IN INCHES AND TWO PLACE DECIMALS.

MANNED SPACECRAFT CENTER HOUSTON, TEXAS | SIZE A | 1900943

SCALE - NONE | REV LTR AR | SHEET 168 OF 188

MIL 2089 - 4-65 WIN

GMI WIRING HARNESS B AR 1900943

CONDUCTOR INDIVIDUAL LENGTH NUMBER	ITEM NO.	2	FROM CUT WIRE OR SHIELD STRIP WIRE OR JACKET CIRCUIT POINT	2	T I N	2	TERMINATION SPEC. 1 ITEM NO.						NO.	TO CUT WIRE OR SHIELD STRIP WIRE OR JACKET CIRCUIT POINT	2	T I N	2	TERMINATION SPEC 1 ITEM NO.						NO.
B1475	16		E 53	25N										E 54	25N										
B1476	16		E 55	25N										E 56	25N										
B1477	16		TB23- 21	20N			111							E 56	25N										
B1478	16		E 57	25N										E 58	25N										
B1479	16		TB15- 5	20N			111							E 58	25N										
B1480	42		P40-S*	25N										P47-M*	25N										
B1481	42		P90-C	25N										P34-Z	25N										
B1482	42		P90-D	25N										P25-W	25N										
B1483	41		J22-I*	25N										TB21- 4CD	16N			107							
B1484	42		P21-U	25N										TB20- 5AB	16N			107							
B1485	42		P33-S	25N										TB20- 5AB	16N			107							
B1486	41		E 59	25N										TB23- 20	25N			111							
B1487	40		J26-C	25N			157							TB 9- 1	20N			111							
B1488	40		J26-D	25N			157							TB12- 10	20N			111							
B1489	46			225		200	85				7				400		370	48	52	84	6				
B1489B	41		TB19- 7	16N			107							SHLD B1489	25N										
B1489L			P21-D	25N										TB19- 6CD	16N			107							
B1489R			P21-C	25N										TB19- 6AB	16N			107							

1> THE STD CONDUCTOR TERMINATION FIGURES ARE PER
2> DIMENSIONS ARE IN INCHES AND TWO PLACE DECIMALS.

MANNED SPACECRAFT CENTER HOUSTON, TEXAS | SIZE A | 1900943

SCALE - NONE | REV LTR AR | SHEET 169 OF 188

MIL 2089 - 4-65 WIN

GMI WIRING HARNESS B AR 1900943

CONDUCTOR INDIVIDUAL LENGTH NUMBER	ITEM NO.	2	FROM CUT WIRE OR SHIELD STRIP WIRE OR JACKET CIRCUIT POINT	2	T I N	2	TERMINATION SPEC. 1 ITEM NO.						NO.	TO CUT WIRE OR SHIELD STRIP WIRE OR JACKET CIRCUIT POINT	2	T I N	2	TERMINATION SPEC 1 ITEM NO.						NO.
B1490			TB27- 10	16N			107							E 22	25N										
B1491			TB27- 22	16N			107							E 22	25N										
B1492			TB27- 28	16N			107							E 22	25N										
B1493	41		TB20- 11CD	17N			107							TB 9- 6	20N			111							
B1494	42		P16-V	25N										P16-X	25N										
B1495	42		P16-Z	25N										P16-B*	25N										
B1496	42		P16-N*	25N										P17-G	25N										
B1497	42		P16-G	25N										P16-J	25N										
B1498	42		P16-L	25N										P16-N	25N										
B1499	42		P16-R	25N										P17-K*	25N										
B1500	42		P16-D*	25N										P16-G*	25N										
B1501	42		P16-C	25N										P16-E	25N										
B1502	7			225N		200	120				7A				225N		200	117	118	85	6				
B1502B	41		TB19- 39	25N			107							SHLD B1502	25N										
B1502W			TB 3- 9	20N			111							TB19- 38AB	16N			107							
B1503	41		TB25- 20	20N			111							TB19- 38CD	16N			107							
B1504	16		P43-B	25N										P43-C	25N										
B1505	16		P45-B	25N										P45-C	25N										

1> THE STD CONDUCTOR TERMINATION FIGURES ARE PER
2> DIMENSIONS ARE IN INCHES AND TWO PLACE DECIMALS.

MANNED SPACECRAFT CENTER HOUSTON, TEXAS | SIZE A | 1900943

SCALE - NONE | REV LTR AR | SHEET 170 OF 188

MIL 2089 - 4-65 WIN

GMI WIRING HARNESS B AR 1900943

CONDUCTOR INDIVIDUAL LENGTH NUMBER	ITEM NO.	2	FROM CUT WIRE OR SHIELD STRIP WIRE OR JACKET CIRCUIT POINT	2	T I N	2	TERMINATION SPEC. 1 ITEM NO.						NO.	TO CUT WIRE OR SHIELD STRIP WIRE OR JACKET CIRCUIT POINT	2	T I N	2	TERMINATION SPEC 1 ITEM NO.						NO.
B1506	41		E 60	25N										E 63	25N										
B1507	41		E 61	25N										TB23- 26	20N			111							
B1508	41		E 62	25N										TB23- 27	20N			111							
B1509	41		E 63	25N										TB23- 29	20N			111							
B1510	42		P37-N	25N										TB27-8A	16N			108							
B1511	42		P 5-B	25N										TB18-83AB	16N			107							
B1512	42		P 5-T*	25N										TB18-83CD	16N			107							
B1513	7			225N		200	120				7A				225N		200	117	118	85	6				
B1513A	41		SHLD B1513	25N										E 26	25N										
B1513W			J22-A	25N										P11-U	25N										
B1514			DELETED																						
B1515			DELETED																						
B1515L			DELETED																						
B1515R			DELETED																						
B1515Y			DELETED																						
B1516			DELETED																						
B1517			DELETED																						
B1517L			DELETED																						

1> THE STD CONDUCTOR TERMINATION FIGURES ARE PER
2> DIMENSIONS ARE IN INCHES AND TWO PLACE DECIMALS.

MANNED SPACECRAFT CENTER HOUSTON, TEXAS | SIZE A | 1900943

SCALE - NONE | REV LTR AR | SHEET 171 OF 188

MIL 2089 - 4-65 WIN

CONDUCTOR INDIVIDUAL LENGTH NUMBER	ITEM NO.	2	FROM CUT WIRE OR SHIELD STRIP WIRE OR JACKET CIRCUIT POINT	2	T I N	2	TERMINATION SPEC. ITEM NO.	1	NO.	TO CUT WIRE OR SHIELD STRIP WIRE OR JACKET CIRCUIT POINT	2	T I N	2	TERMINATION SPEC. ITEM NO.	1	NO.
B1517R			DELETED													
B1517Y			DELETED													
B1518			DELETED													
B1519			DELETED													
B1519L			DELETED													
B1519R			DELETED													
B1519Y			DELETED													
B1520			DELETED													
B1521			DELETED													
B1521L			DELETED													
B1521R			DELETED													
B1521Y			DELETED													
B1522			DELETED													
B1523			DELETED													
B1523L			DELETED													
B1523R			DELETED													
B1523Y			DELETED													
B1524			DELETED													

1 THE STD CONDUCTOR TERMINATION FIGURES ARE PER
2 DIMENSIONS ARE IN INCHES AND TWO PLACE DECIMALS.

MANNED SPACECRAFT CENTER HOUSTON, TEXAS | SIZE A | 1900943

SCALE-NONE | REV LTR AR | SHEET 172 OF 188

MIL 2089 4-63 WIR

CONDUCTOR INDIVIDUAL LENGTH NUMBER	ITEM NO.	2	FROM CUT WIRE OR SHIELD STRIP WIRE OR JACKET CIRCUIT POINT	2	T I N	2	TERMINATION SPEC. ITEM NO.	1	NO.	TO CUT WIRE OR SHIELD STRIP WIRE OR JACKET CIRCUIT POINT	2	T I N	2	TERMINATION SPEC. ITEM NO.	1	NO.
B1525			DELETED													
B1525L			DELETED													
B1525R			DELETED													
B1525Y			DELETED													
B1526			DELETED													
B1527			DELETED													
B1527L			DELETED													
B1527R			DELETED													
B1527Y			DELETED													
B1528			DELETED													
B1529	42		P37-P	25N						TB27-9A	16N			108		
B1530			DELETED													
B1530L			DELETED													
B1530R			DELETED													
B1530Y			DELETED													
B1531	7			225		200	120				225		200	117	118	85
B1531B	41		TB20- 69	16N			107			SHLD B1531	25N					
B1531W			P26-T	25N						TB20-68AB	16N			107		

1 THE STD CONDUCTOR TERMINATION FIGURES ARE PER
2 DIMENSIONS ARE IN INCHES AND TWO PLACE DECIMALS.

MANNED SPACECRAFT CENTER HOUSTON, TEXAS | SIZE A | 1900943

SCALE-NONE | REV LTR AR | SHEET 173 OF 188

MIL 2089 4-63 WIR

CONDUCTOR INDIVIDUAL LENGTH NUMBER	ITEM NO.	2	FROM CUT WIRE OR SHIELD STRIP WIRE OR JACKET CIRCUIT POINT	2	T I N	2	TERMINATION SPEC. ITEM NO.	1	NO.	TO CUT WIRE OR SHIELD STRIP WIRE OR JACKET CIRCUIT POINT	2	T I N	2	TERMINATION SPEC. ITEM NO.	1	NO.
B1532	47			225		200	85				225		200	48	52	84
B1532B	41		TB21- 1	16N			107			SHLD B1532	25N					
B1532L			J17-L	25N						TB21-2CD	16N			107		
B1532R			J17-K	25N						TB21-2AB	16N			107		
B1533	7			225		200	120				225		200	117	118	85
B1533B	41		TB20- 69	16N			107			SHLD B1533	25N					
B1533W			P26-U	25N						TB20-68CD	16N			107		
B1534	47			225		200	85				225		200	48	52	84
B1534B	41		TB21- 1	16N			107			SHLD B1534	25N					
B1534L			P35-H*	25N						TB21-2CD	16N			107		
B1534R			P35-I*	25N						TB21-2AB	16N			107		
B1535	42		P96-PP	25N						P99-EE	25N					
B1536	42		P96-MM	25N						P99-D	25N					
B1537	42		P96-LL	25N						P34-I*	25N					
B1538	42		P96-NN	25N						J21-W*	25N					
B1539	42		P92-PP	25N						P99-PP	25N					
B1540	42		P92-NN	25N						P99-NN	25N					
B1541	41		P37-W	25N						TB20-5AB	16N			107		

1 THE STD CONDUCTOR TERMINATION FIGURES ARE PER
2 DIMENSIONS ARE IN INCHES AND TWO PLACE DECIMALS.

MANNED SPACECRAFT CENTER HOUSTON, TEXAS | SIZE A | 1900943

SCALE-NONE | REV LTR AR | SHEET 174 OF 188

MIL 2089 4-63 WIR

CONDUCTOR NUMBER	INDIVIDUAL LENGTH ITEM NO	FROM CUT WIRE OR SHIELD STRIP WIRE OR JACKET CIRCUIT POINT	FROM TERMINATION SPEC	FROM TERMINATION ITEM NO	TO CUT WIRE OR SHIELD STRIP WIRE OR JACKET CIRCUIT POINT	TO TERMINATION SPEC	TO TERMINATION ITEM NO
B1542	65		52	23 90 91 7		225	200 86 87 85 6
B1542B	42	TB17-17CD	16N	107	SHLD B1542	25N	
B1542E		P68-D1	11N	89	TB17-17AB	16N	107
B1542H		P68-D2			SHLD B1542		
B1543	42	P99-HH	25N		TB19- 2AB	17N	107
B1544	42	P33-Y	25N		TB19- 2AB	17N	107
B1545	42	J26-EE	25N		TB19- 3AB	17N	107
B1546	42	P33-F	25N		TB19- 3AB	17N	107
B1547	41	P24-C	25N		P31-U*	25N	
B1548	41	P24-D	25N		P34-Y*	25N	
B1549	41	P34-M*	25N		TB20- 4CD	16N	107
B1550	41	J16-M	25N		P26-Y	25N	
B1551	41	J16-A	25N		P26-V*	25N	
B1552	41	J16-R	25N		P26-KK	25N	
B1553	41	J16-P	25N		TB 3- 7	20N	111
B1554		DELETED					
B1555	41	TB 1- 7	20N	111	P26-JJ	25N	
B1556	41	TB 1- 7	20N	111	P26-K	25N	

1. THE STD CONDUCTOR TERMINATION FIGURES ARE PER
2. DIMENSIONS ARE IN INCHES AND TWO PLACE DECIMALS.

MANNED SPACECRAFT CENTER HOUSTON, TEXAS | SIZE A | 1900943

SCALE - NONE | REV LTR ~~AA~~ AJ | SHEET 175 OF 188

CONDUCTOR INDIVIDUAL LENGTH NUMBER	ITEM NO.	2	FROM CUT WIRE OR SHIELD STRIP WIRE OR JACKET CIRCUIT POINT	2	T I N	2	TERMINATION SPEC. 1 ITEM NO.	NO.	TO CUT WIRE OR SHIELD STRIP WIRE OR JACKET CIRCUIT POINT	2	T I N	2	TERMINATION SPEC. 1 ITEM NO.	NO.
B1557	41		TB 1- 7	20N			111		P26-U*	25N				
B1558	~~18~~		~~P65-X~~	~~20N~~					~~TB24- 3~~	~~20N~~			~~111~~	
B1559	~~18~~		~~P63-Y~~	~~20N~~					~~TB24- 8~~	~~20N~~			~~111~~	
B1560	~~18~~		~~P63-Z~~	~~20N~~					~~TB24- 10~~	~~20N~~			~~111~~	
B1561	41		P35-AA	25N					TB17- 90AB	16N			107	
B1562	46			225		200	85			400N	370	48	52 84	
B1562B	41		TB17- 94	16N			107		SHLD B1562	25N				
B1562L			P9-T*	25N					TB17- 93CD	16N			107	
B1562R			P9-S*	25N					TB17- 93AB	16N			107	
B1563	16		J19-A	25N					E 81	25N				
B1564	16		P37-J	25N					E 82	25N				
B1565	16		J19-S*	25N					E 83	25N				
B1566	16		P37-G	25N					E 84	25N				
B1567	45			225		200	50 54 84			225		200	84	
B1567A	41		SHLD B1567	25N					E 97	25N				
B1567L			E 83	25N					E 84	25N				
B1567R			E 81	25N					E 82	25N				
B1568	45			225		200	50 54 84			225		200	84	

1 THE STD CONDUCTOR TERMINATION FIGURES ARE PER
2 DIMENSIONS ARE IN INCHES AND TWO PLACE DECIMALS.

MANNED SPACECRAFT CENTER HOUSTON, TEXAS | SIZE A | 1900943
SCALE-NONE | REV LTR ~~AR~~ AT | SHEET 176 OF 188

MIL 2049 - 4-63 WIN

CONDUCTOR INDIVIDUAL LENGTH NUMBER	ITEM NO.	2	FROM CUT WIRE OR SHIELD STRIP WIRE OR JACKET CIRCUIT POINT	2	T I N	2	TERMINATION SPEC. 1 ITEM NO.	NO.	TO CUT WIRE OR SHIELD STRIP WIRE OR JACKET CIRCUIT POINT	2	T I N	2	TERMINATION SPEC. 1 ITEM NO.	NO.
B1568A	41		SHLD B1568	25N					E 97	25N				
B1568L			E 83	25N					E 84	25N				
B1568R			E 81	25N					E 82	25N				
B1569	45			225		200	50 54 84			225		200	84	
B1569A	41		SHLD B1569	25N					E 97	25N				
B1569L			E 83	25N					E 84	25N				
B1569R			E 81	25N					E 82	25N				
B1570	16		J19-B	25N					E 85	25N				
B1571	16		P37-F	25N					E 86	25N				
B1572	16		J19-T*	25N					E 87	25N				
B1573	16		P37-H	25N					E 88	25N				
B1574	45			225		200	50 54 84			225		200	84	
B1574A	41		SHLD B1574	25N					E 97	25N				
B1574L			E 87	25N					E 88	25N				
B1574R			E 85	25N					E 86	25N				
B1575	45			225		200	50 54 84			225		200	84	
B1575A	41		SHLD B1575	25N					E 97	25N				
B1575L			E 87	25N					E 88	25N				

1 THE STD CONDUCTOR TERMINATION FIGURES ARE PER
2 DIMENSIONS ARE IN INCHES AND TWO PLACE DECIMALS.

MANNED SPACECRAFT CENTER HOUSTON, TEXAS | SIZE A | 1900943
SCALE-NONE | REV LTR AR | SHEET 177 OF 188

MIL 2049 - 4-63 WIN

CONDUCTOR INDIVIDUAL LENGTH NUMBER	ITEM NO.	2	FROM CUT WIRE OR SHIELD STRIP WIRE OR JACKET CIRCUIT POINT	2	T I N	2	TERMINATION SPEC. 1 ITEM NO.	NO.	TO CUT WIRE OR SHIELD STRIP WIRE OR JACKET CIRCUIT POINT	2	T I N	2	TERMINATION SPEC. 1 ITEM NO.	NO.
B1575R			E 85	25N					E 86	25N				
B1576	45			225		200	50 54 84			225		200	84	
B1576A	41		SHLD B1576	25N					E 97	25N				
B1576L			E 87	25N					E 88	25N				
B1576R			E 85	25N					E 86	25N				
B1577	16		J19-E*	25N					E 89	25N				
B1578	16		P11-M	25N					E 90	25N				
B1579	16		J19-F*	25N					E 91	25N				
B1580	16		P11-L	25N					E 92	25N				
B1581	45			225		200	50 54 84			225		200	84	
B1581A	41		SHLD B1581	25N					E 98	25N				
B1581L			E 91	25N					E 92	25N				
B1581R			E 89	25N					E 90	25N				
B1582	45			225		200	50 54 84			225		200	84	
B1582A	41		SHLD B1582	25N					E 98	25N				
B1582L			E 91	25N					E 92	25N				
B1582R			E 89	25N					E 90	25N				
B1583	45			225		200	50 54 84			225		200	84	

1 THE STD CONDUCTOR TERMINATION FIGURES ARE PER
2 DIMENSIONS ARE IN INCHES AND TWO PLACE DECIMALS.

MANNED SPACECRAFT CENTER HOUSTON, TEXAS | SIZE A | 1900943
SCALE-NONE | REV LTR AR | SHEET 178 OF 188

MIL 2049 - 4-63 WIN

CONDUCTOR INDIVIDUAL LENGTH NUMBER	ITEM NO.	2	FROM CUT WIRE OR SHIELD STRIP WIRE OR JACKET CIRCUIT POINT	2	T I N	2	TERMINATION SPEC. 1 ITEM NO.	NO.	TO CUT WIRE OR SHIELD STRIP WIRE OR JACKET CIRCUIT POINT	2	T I N	2	TERMINATION SPEC. 1 ITEM NO.	NO.
B1583A	41		SHLD B1583	25N					E 98	25N				
B1583L			E 91	25N					E 92	25N				
B1583R			E 89	25N					E 90	25N				
B1584	16		J19-Q*	25N					E 93	25N				
B1585	16		P11-N	25N					E 94	25N				
B1586	16		J19-R*	25N					E 95	25N				
B1587	16		P11-P	25N					E 96	25N				
B1588	45			225		200	50 54 84			225		200	84	
B1588A	41		SHLD B1588	25N					E 98	25N				
B1588L			E 95	25N					E 96	25N				
B1588R			E 93	25N					E 94	25N				
B1589	45			225		200	50 54 84			225		200	84	
B1589A	41		SHLD B1589	25N					E 98	25N				
B1589L			E 95	25N					E 96	25N				
B1589R			E 93	25N					E 94	25N				
B1590	45			225		200	50 54 84			225		200	84	
B1590A	41		SHLD B1590	25N					E 98	25N				
B1590L			E 95	25N					E 96	25N				

1 THE STD CONDUCTOR TERMINATION FIGURES ARE PER
2 DIMENSIONS ARE IN INCHES AND TWO PLACE DECIMALS.

MANNED SPACECRAFT CENTER HOUSTON, TEXAS | SIZE A | 1900943
SCALE-NONE | REV LTR AR | SHEET 179 OF 188

MIL 2049 - 4-63 WIN

GMI WIRING HARNESS B AR 1900943

CONDUCTOR INDIVIDUAL LENGTH NUMBER	ITEM NO.	2	FROM CUT WIRE OR SHIELD STRIP WIRE OR JACKET CIRCUIT POINT	3	TIN	2	TERMINATION SPEC. 1 ITEM NO.	NO.	TO CUT WIRE OR SHIELD STRIP WIRE OR JACKET CIRCUIT POINT	3	TIN	2	TERMINATION SPEC. 1 ITEM NO.	NO.
B1590R			E 93	25N					E 94	25N				
B1591	16		E 97	25N					E 98	25N				
B1592	16		J19-V	25N					E 97	25N				
B1594	65			225		200	86 87 85			225		200	86 87 85	
B1594A	41		SHLD B1594	25N					P14-B	25N				
B1594B	41		TB17- 9CD	16N		107			SHLD B1594	25N				
B1594E			P14-C	25N					TB17- 9AB	16N		107		
B1595	65			52	23	90 91				225		200	86 87 85	
B1595B	41		TB17- 9CD	16N		107			SHLD B1595	25N				
B1595E			P94-A1	11N		89			TB17- 9AB	16N		107		
B1595X			P94-A2						SHLD B1595					
B1596	65			225		200	86 87 85			225		200	86 87 85	
B1596A	41		SHLD B1596	25N					P14-K*	25N				
B1596B	41		TB17- 11CD	16N		107			SHLD B1596	25N				
B1596E			P14-J*	25N					TB17- 11AB	16N		107		
B1597	65			52	23	90 91				225		200	86 87 85	
B1597B	41		TB17- 11CD	16N		107			SHLD B1597	25N				
B1597E			P94-B1	11N		89			TB17- 11AB	16N		107		

1> THE STD CONDUCTOR TERMINATION FIGURES ARE PER
2> DIMENSIONS ARE IN INCHES AND TWO PLACE DECIMALS.

MANNED SPACECRAFT CENTER HOUSTON, TEXAS | SIZE A | 1900943
SCALE-NONE | REV LTR AR | SHEET 180 OF 188

MIL 2049 - 4-63 WTR

GMI WIRING HARNESS B ~~AR~~ AS 1900943

CONDUCTOR INDIVIDUAL LENGTH NUMBER	ITEM NO.	2	FROM CUT WIRE OR SHIELD STRIP WIRE OR JACKET CIRCUIT POINT	3	TIN	2	TERMINATION SPEC. 1 ITEM NO.	NO.	TO CUT WIRE OR SHIELD STRIP WIRE OR JACKET CIRCUIT POINT	3	TIN	2	TERMINATION SPEC. 1 ITEM NO.	NO.
B1597X			P94-B2						SHLD B1597					
B1598	65			225		200	86 87 85			225		200	86 87 85	
B1598A	41		SHLD B1598	25N					P14-Q*	25N				
B1598B	41		TB17- 6CD	16N		107			SHLD B1598	25N				
B1598E			P14-P*	25N					TB17- 6AB	16N		107		
B1599	65			52	23	90 91				225		200	86 87 85	
B1599B	41		TB17- 6CD	16N		107			SHLD B1599	25N				
B1599E			P94-C1	11N		89			TB17- 6AB	16N		107		
B1599X			P94-C2						SHLD B1599					
B1600	65			225		200	86 87 85			225		200	86 87 85	
B1600A	41		SHLD B1600	25N					P14-M*	N				
B1600B	41		TB17- 8CD	16N		107			SHLD B1600	N				
B1600E			P14-N*	25N					TB17- 8AB	N		107		
B1601	65			52	23	90 91				225		200	86 87 85	
B1601B	41		TB17- 8CD	16N		107			SHLD B1601	25N				
B1601E			P94-D1	11N		89			TB17- 8AB	16N		107		
B1601X			P94-D2						SHLD B1601					
B1624	41		P92-N	25N					J25-P	25N				

1> THE STD CONDUCTOR TERMINATION FIGURES ARE PER
2> DIMENSIONS ARE IN INCHES AND TWO PLACE DECIMALS.

MANNED SPACECRAFT CENTER HOUSTON, TEXAS | SIZE A | 1900943
SCALE-NONE | REV LTR ~~AR~~ AC | SHEET 181 OF 188

MIL 2049 - 4-63 WTR

WIRING HARNESS "B" ~~AR~~ AU 1900943

CONDUCTOR INDIVIDUAL LENGTH NUMBER	ITEM NO.	2	FROM CUT WIRE OR SHIELD STRIP WIRE OR JACKET CIRCUIT POINT	3	TIN	2	TERMINATION SPEC. 1 ITEM NO.	NO.	TO CUT WIRE OR SHIELD STRIP WIRE OR JACKET CIRCUIT POINT	3	TIN	2	TERMINATION SPEC. 1 ITEM NO.	NO.
B1625	46			225		200	85			400		370	48 52 84	
B1625B	41		TB19-80	16N		107			SHLD B1625	25N				
B1625R			P84-HH	25N					TB19-79AB	16N		107		
B1625L			P84-JJ	25N					TB19-79CD	16N		107		
B1626	46			225		200	85			400		370	48 52 84	
B1626B	41		TB19-82	16N		107			SHLD B1626	25N				
B1626R			P85-HH	25N					TB19-81AB	16N		107		
B1626L			P85-JJ	25N					TB19-81CD	16N		107		

1> THE STD CONDUCTOR TERMINATION FIGURES ARE PER
2> DIMENSIONS ARE IN INCHES AND TWO PLACE DECIMALS.

MANNED SPACECRAFT CENTER HOUSTON, TEXAS | SIZE A | 1900943
SCALE-NONE | REV LTR ~~AR~~ AU | SHEET 182 of 188

MIL 2049 - 4-63 WTR

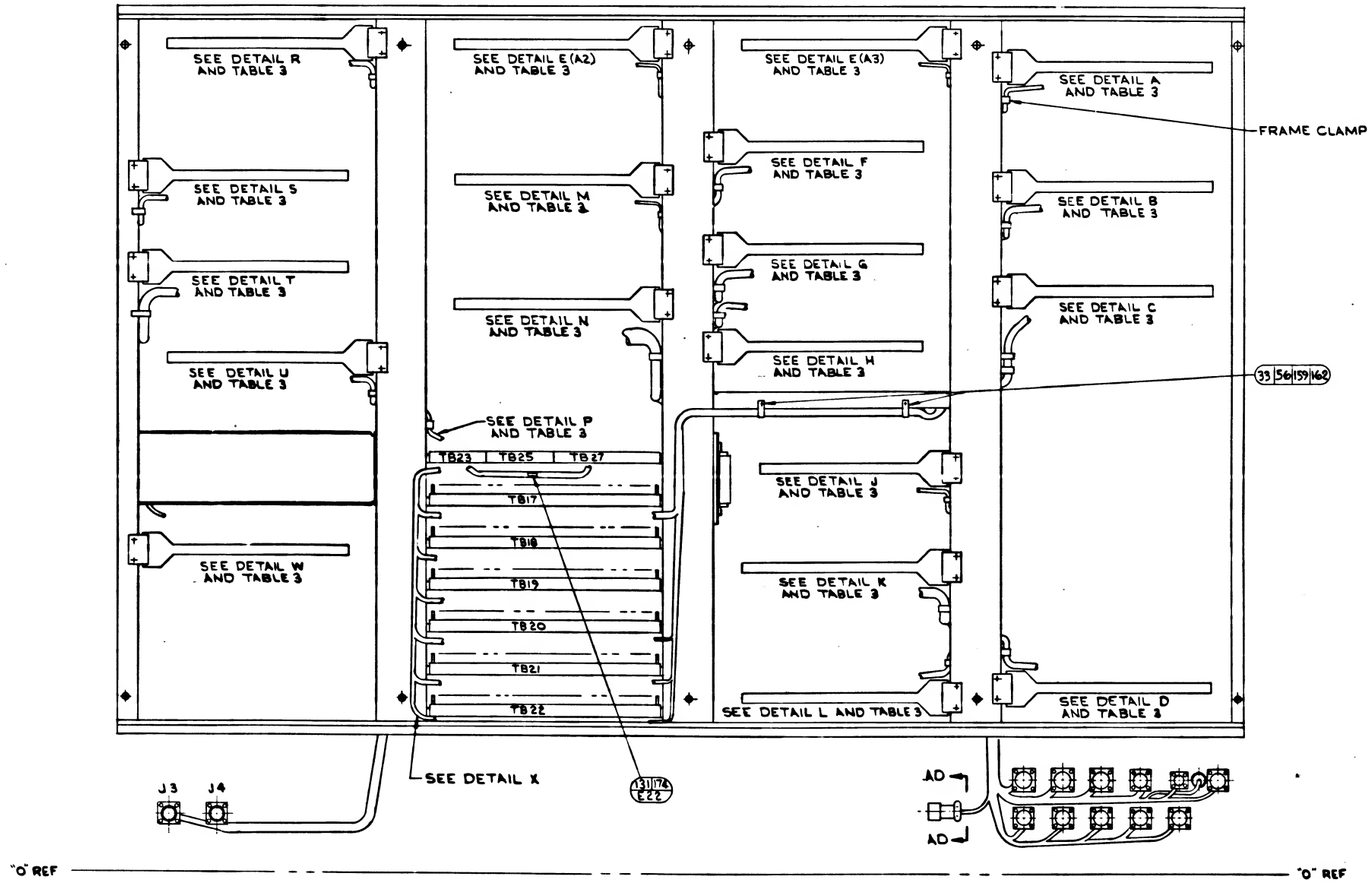

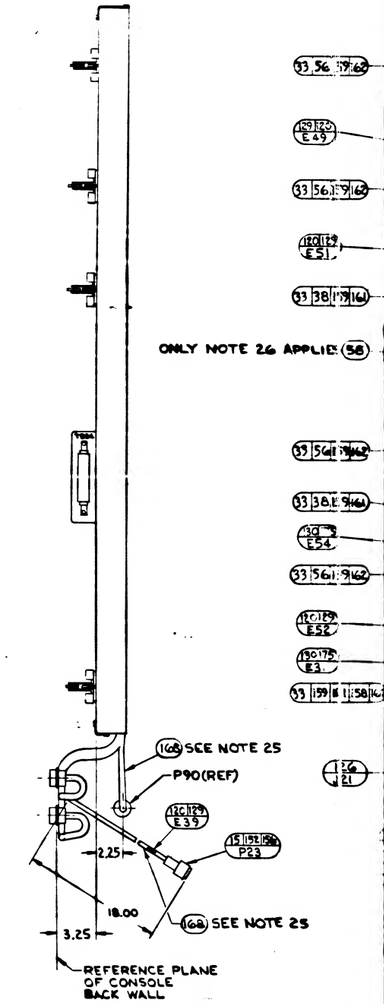

DETAIL	DRAWER
A	MONITOR PANEL (MPL)
B	TEMP MONITOR & CONTROL (TMC)
C	COMPUTER SIMULATOR (CMS)
D	PWR SUPPLY & LOAD PANEL (PDL)
E	IRIG MONITOR SCOPE (IMS)(A2) PIPA MONITOR SCOPE (PMS)(A3)
F	GIMBAL POSITION CONTROL (GPC)
G	TEST CONTROL (TCL)
H	TEST SELECTOR (TES)
J	MONITOR SIGNAL ISOLATION PANEL (MSI)
K	DIGITAL RECORDER (PRT)
L	ELECTRONICS POWER SUPPLY (NPS)
M	DUAL BEAM SCOPE (DBS)
N	PRIMARY SIGNAL SELECT (PSS)
P	COAXIAL DISTRIBUTION PANEL (SSS)
R	DIGITAL VOLTMETER (DVM)
S	PHASE ANGLE VOLTMETER (PAV)
T	COUNTER (CTR)
U	OSCILLOGRAPH SIGNAL SELECT (RSS)
W	SIGNAL GENERATOR (SGN)

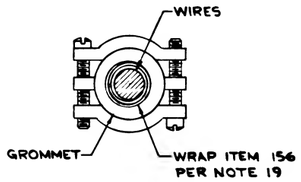

VIEW AD-AD

1900943 SH 183

1/A 1900943

REVISIONS					
SYM	ZONE	DESCRIPTION	CHG NO	DATE	APPD
		See Sht 1 for Revision Record			

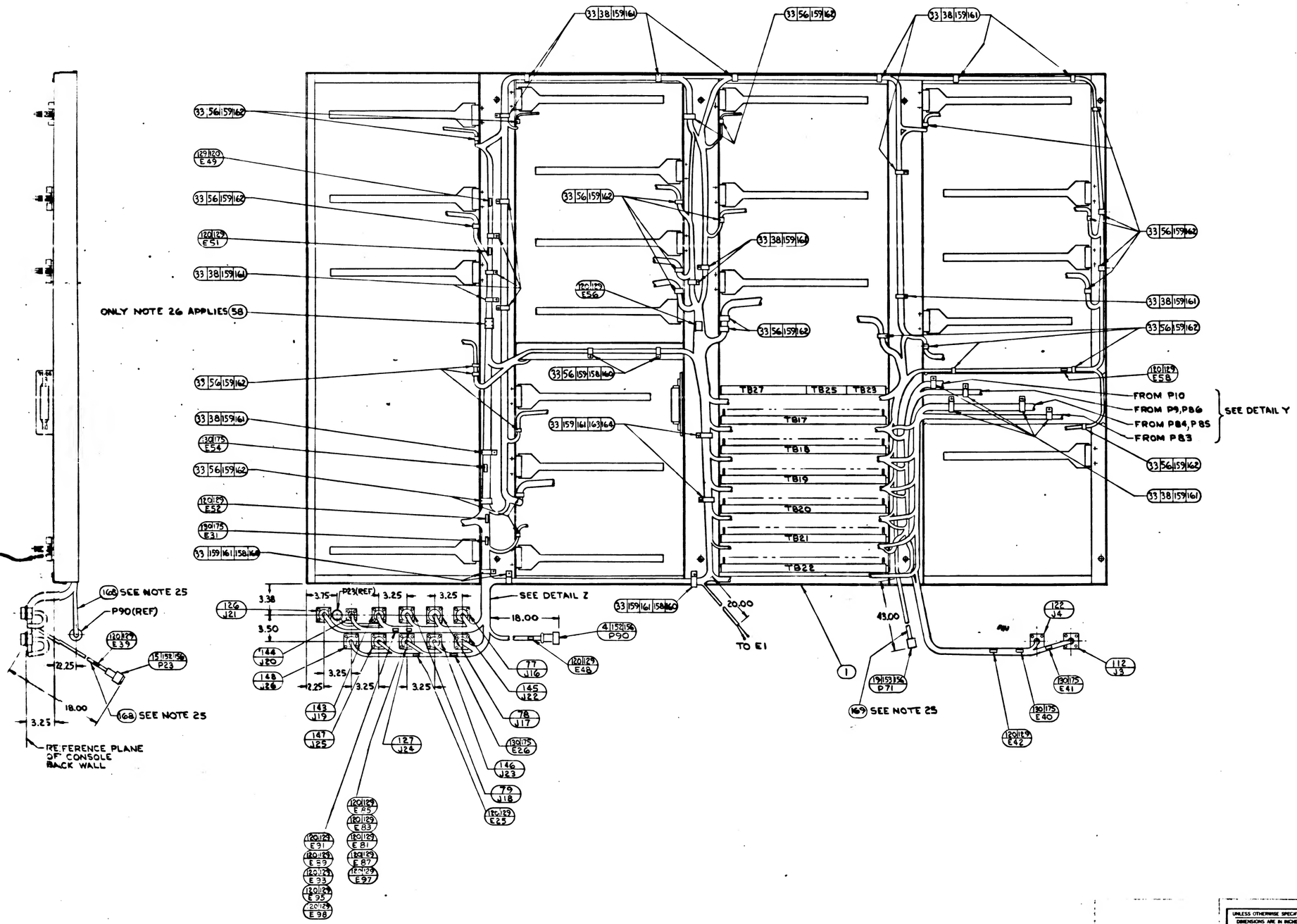

FOR INFORMATION ONLY

CLASS B RELEASE TDR No._____ DATE

UNLESS OTHERWISE SPECIFIED DIMENSIONS ARE IN INCHES TOLERANCES ON FRACTIONS ± DECIMALS ± ANGLES ±	AC SPARK PLUG DIVISION, GMC MILWAUKEE, WISCONSIN	MANNED SPACECRAFT CENTER HOUSTON, TEXAS
DO NOT SCALE THIS DRAWING	ACSP PN	WIRING HARNESS "B" & FRAME ASSEMBLY
MATERIAL	DRAWN 22 FEB 64 DATE	
	CHECKED 17 MAR 64	
	APPROVAL 18 MAR 64	
	APPROVAL	
	NASA APPROVAL	CODE IDENT NO. J — 1900943
CONTRACT NAS 9-497	MIT APPROVAL	SCALE ~ — SHEET 183 OF 188

1900943 SH 183

2/1900943

1900943

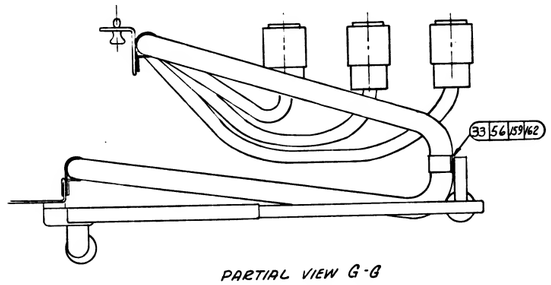

PARTIAL VIEW G-G

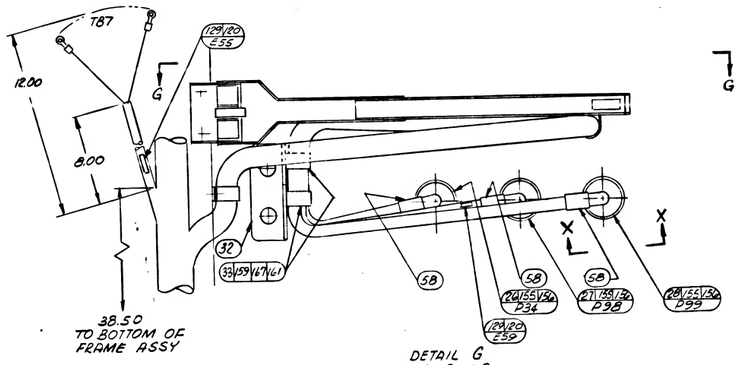

DETAIL G
SCALE 1:2

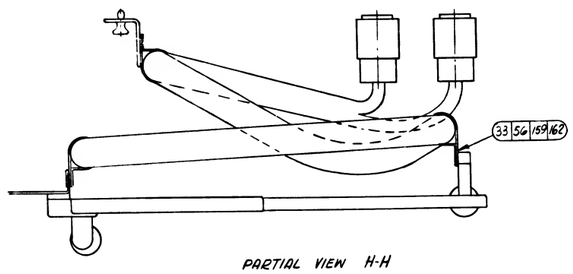

PARTIAL VIEW H-H

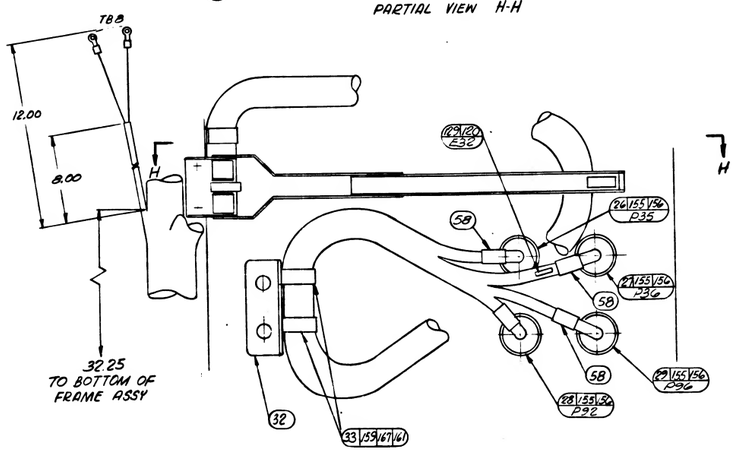

DETAIL H
SCALE 1:2

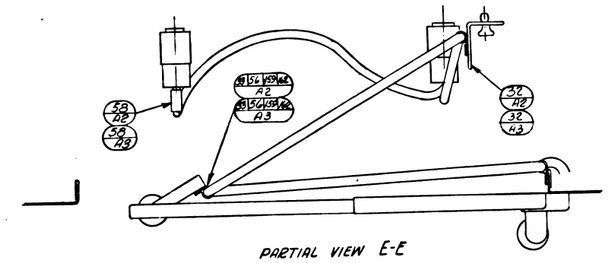

PARTIAL VIEW E-E

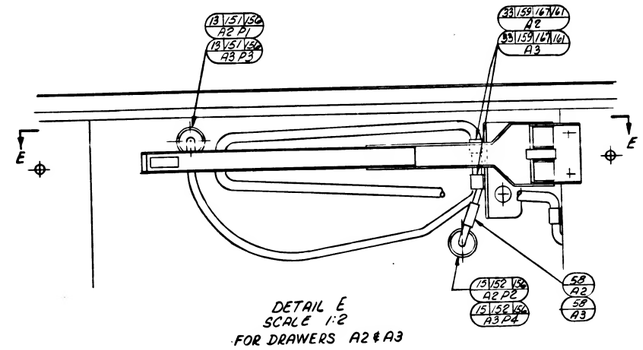

DETAIL E
SCALE 1:2
FOR DRAWERS A2 & A3

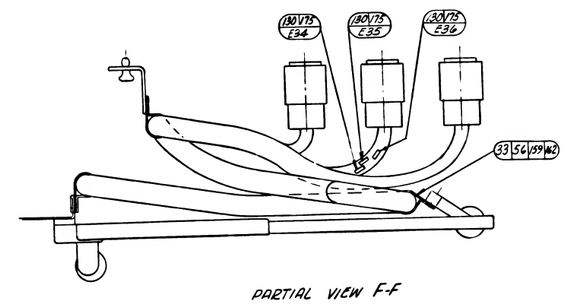

PARTIAL VIEW F-F

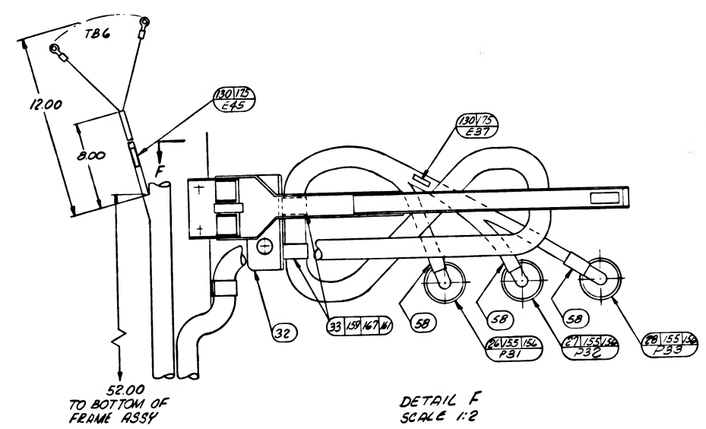

DETAIL F
SCALE 1:2

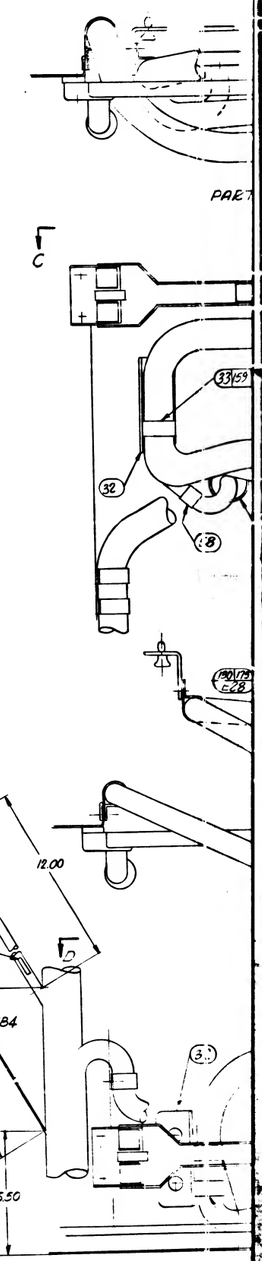

1900943 E-182

1-1-900943

REVISIONS					
SYM	ZONE	DESCRIPTION	CHG NO	DATE	APPD
M		SEE SHT 1 FOR REVISION RECORD			

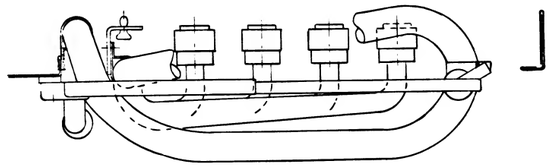

PARTIAL VIEW C-C

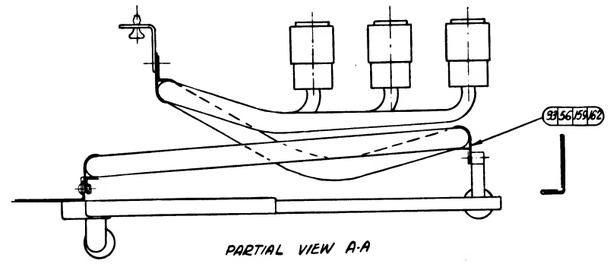

PARTIAL VIEW A-A

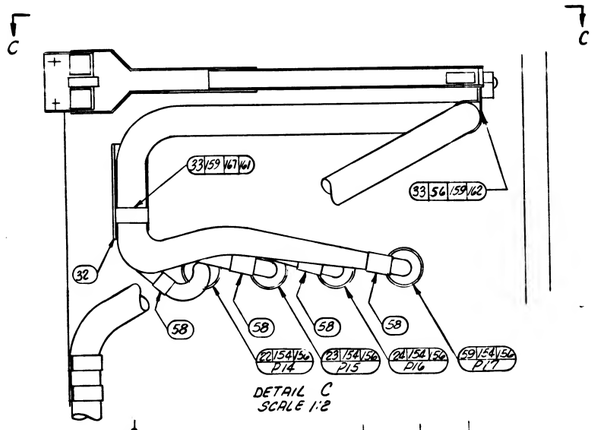

DETAIL C
SCALE 1:2

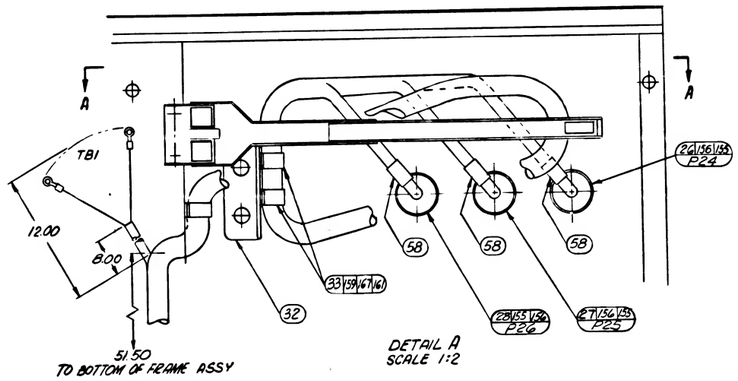

DETAIL A
SCALE 1:2

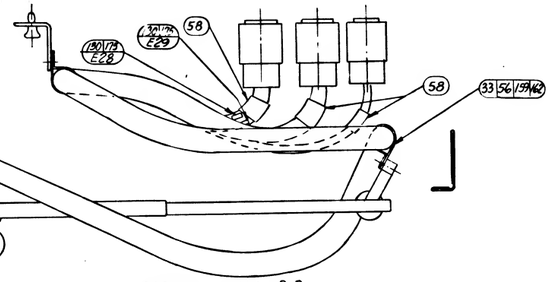

PARTIAL VIEW D-D

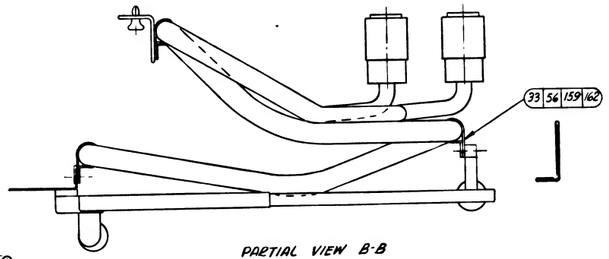

PARTIAL VIEW B-B

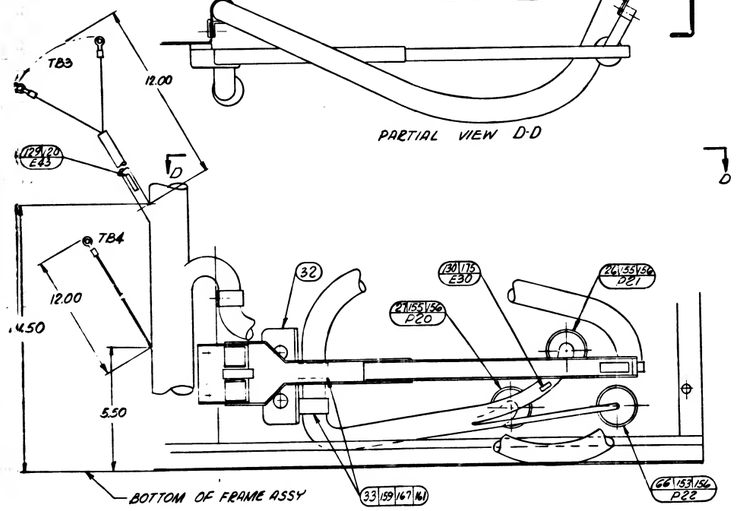

DETAIL D
SCALE 1:2

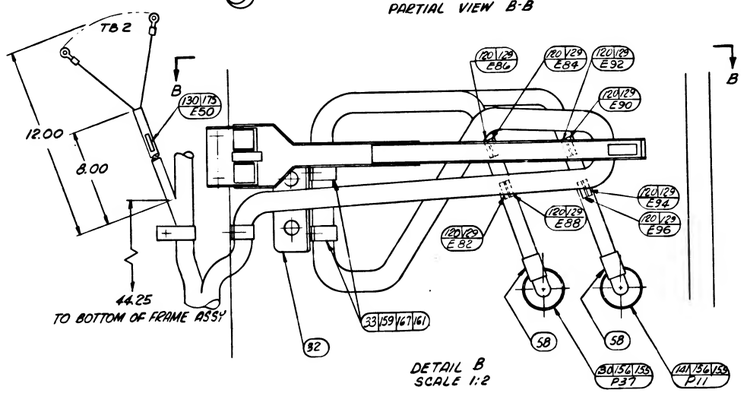

DETAIL B
SCALE 1:2

FOR INFORMATION ONLY

CLASS B RELEASE TDR No._____ DATE

UNLESS OTHERWISE SPECIFIED DIMENSIONS ARE IN INCHES TOLERANCES ON FRACTIONS ± DECIMALS ± ANGLES ±	AC SPARK PLUG DIVISION, GMC MILWAUKEE, WISCONSIN	MANNED SPACECRAFT CENTER HOUSTON, TEXAS
DO NOT SCALE THIS DRAWING	AC SP PN / DRAWN / CHECKED / APPROVAL / APPROVAL	WIRING HARNESS "B" & FRAME ASSEMBLY
MATERIAL	NASA APPROVAL	CODE IDENT NO. J — 1900943
CONTRACT NAS 9-497	MIT APPROVAL	SCALE ~ — SHEET 8 OF 185

1900943 A

1900943

2/1900943

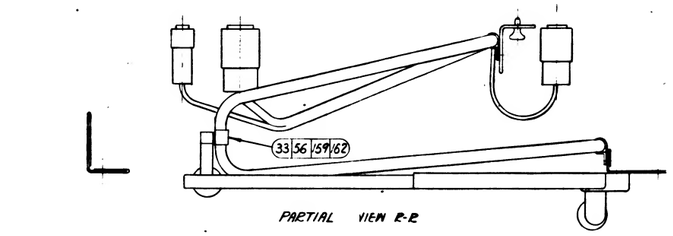

PARTIAL VIEW R-R

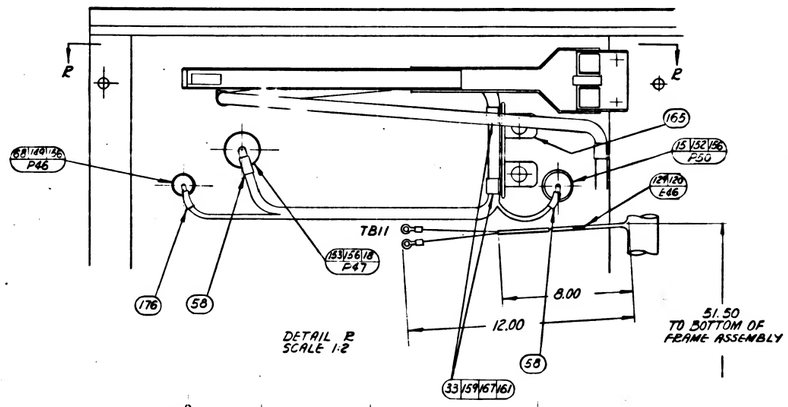

DETAIL R
SCALE 1:2

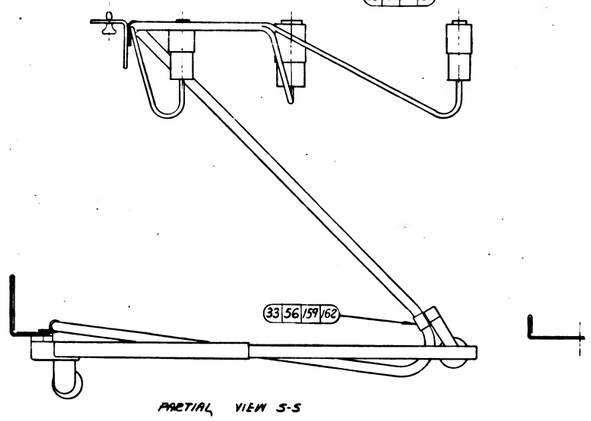

PARTIAL VIEW S-S

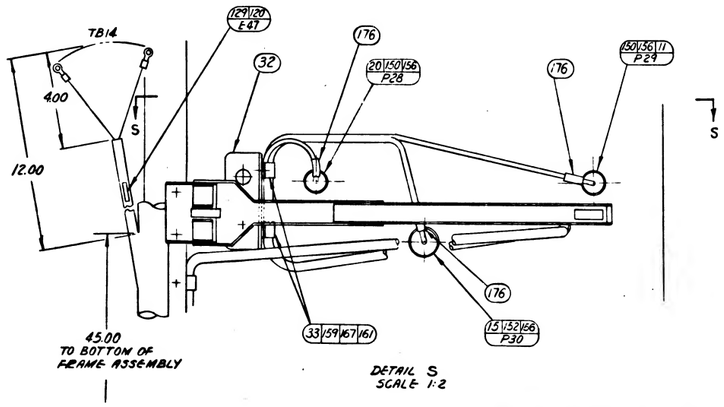

DETAIL S
SCALE 1:2

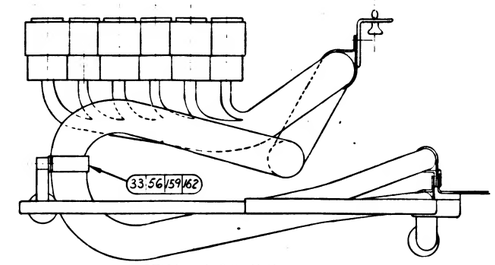

PARTIAL VIEW N-N

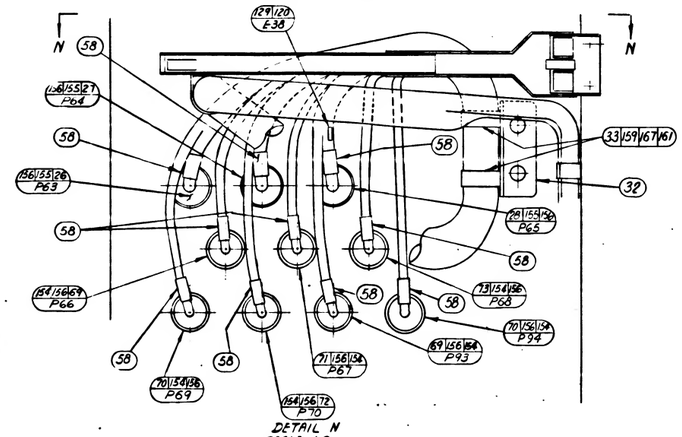

DETAIL N
SCALE 1:2

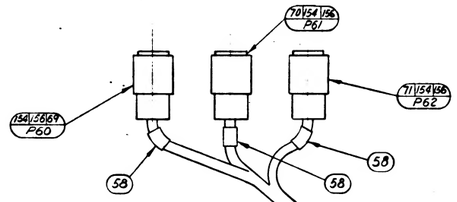

CABLE RETRACTOR
& CABINET SHOWN
FOR REF.

PARTIAL VIEW P-P

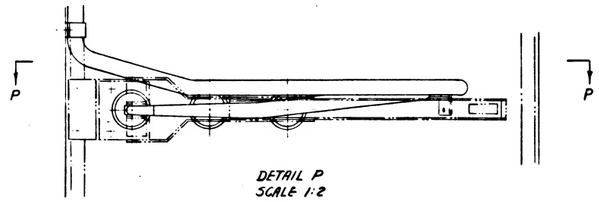

DETAIL P
SCALE 1:2

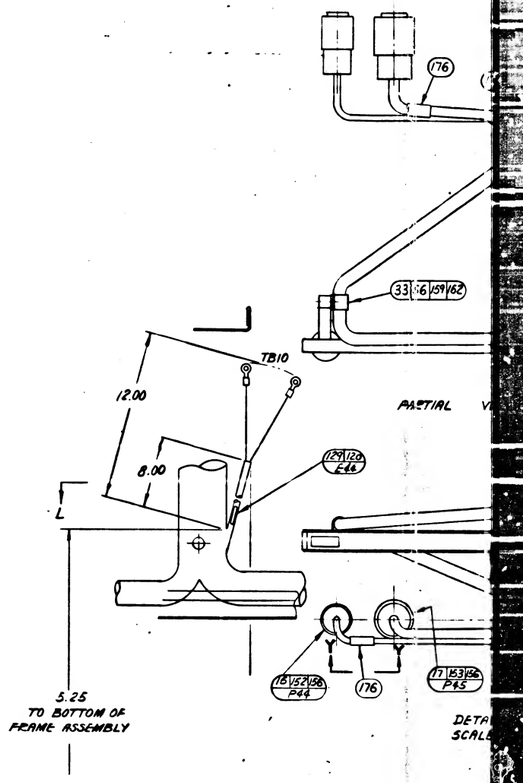

PARTIAL V

DETA
SCALE

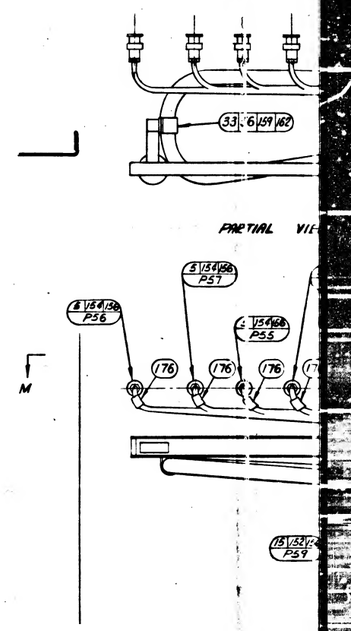

PARTIAL VIE

DETAI
SCALE

1900943 SH 185

1/1900943

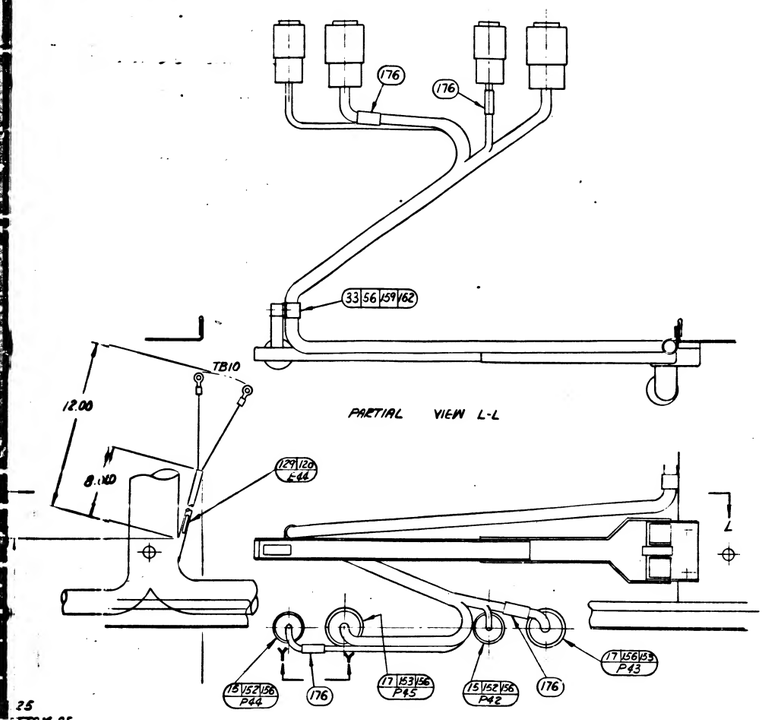

PARTIAL VIEW L-L

DETAIL L
SCALE 1:2

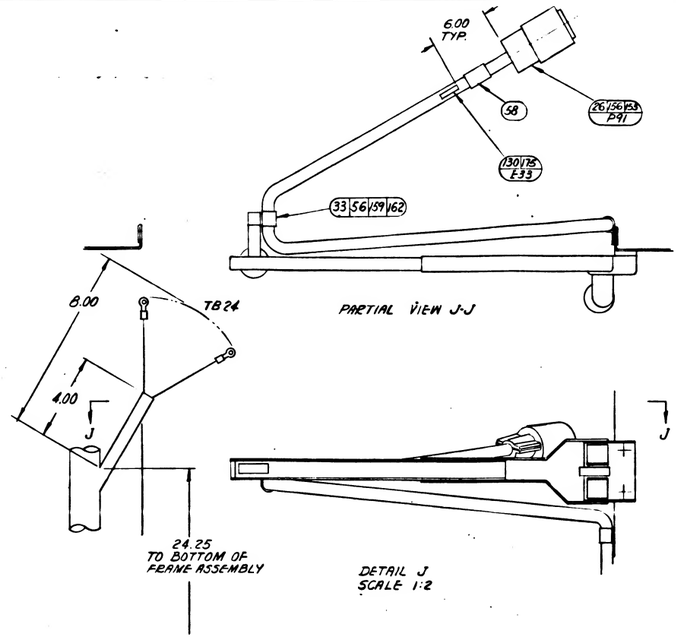

PARTIAL VIEW J-J

DETAIL J
SCALE 1:2

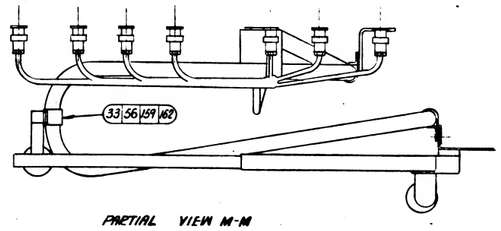

PARTIAL VIEW M-M

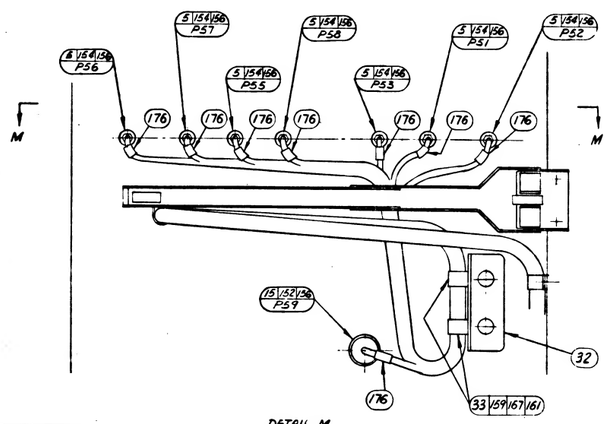

DETAIL M
SCALE 1:2

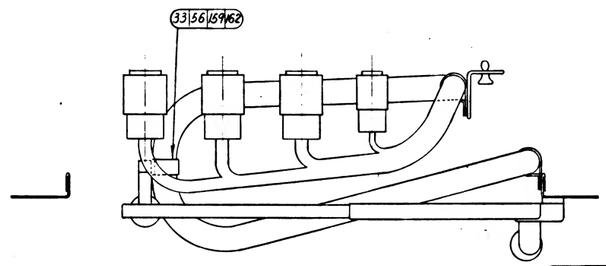

PARTIAL VIEW K-K

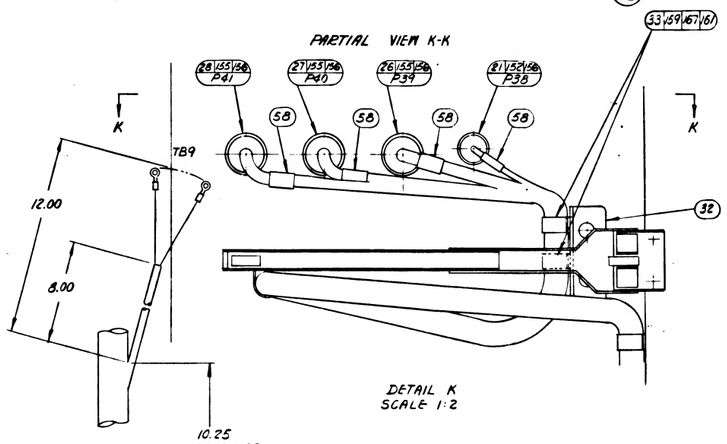

DETAIL K
SCALE 1:2

REVISIONS

SYM	ZONE	DESCRIPTION	CHG NO	DATE	APPD
		SEE SHT 1 FOR REVISION RECORD			

FOR INFORMATION ONLY

CLASS B RELEASE TDR No._____ DATE

UNLESS OTHERWISE SPECIFIED DIMENSIONS ARE IN INCHES TOLERANCES ON FRACTIONS ± DECIMALS ± ANGLES ±	AC SPARK PLUG DIVISION, GMC MILWAUKEE WISCONSIN	MANNED SPACECRAFT CENTER HOUSTON TEXAS
DO NOT SCALE THIS DRAWING	ACSP PN	WIRING HARNESS "B" & FRAME ASSEMBLY
MATERIAL	DRAWN 2 MARCH 68 DATE	CODE IDENT NO. / SIZE J / 1900943
CONTRACT NAS 9-497	CHECKED 17 MAR 68	SCALE ~ / SHEET 185 OF 188
	APPROVAL	
	APPROVAL	
	NASA APPROVAL	
	MIT APPROVAL	

1900943 SH 185

1900943 AR

2/1900943

2nd 182 of 188
1900943

TABLE 3

LINE DIAGRAM A (FOR DETAIL A)

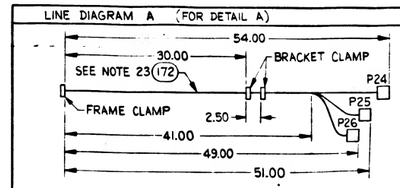

LINE DIAGRAM B (FOR DETAIL B)

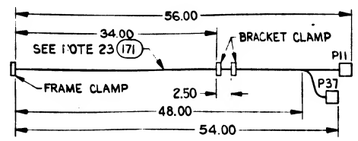

LINE DIAGRAM C (FOR DETAIL C)

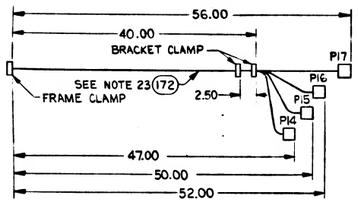

LINE DIAGRAM D (FOR DETAIL D)

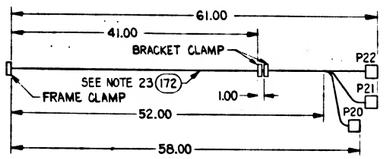

LINE DIAGRAM E (FOR DETAIL E - A2, A3)

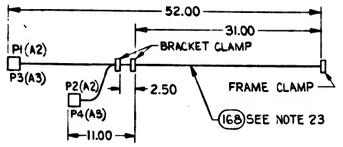

LINE DIAGRAM F (FOR DETAIL F)

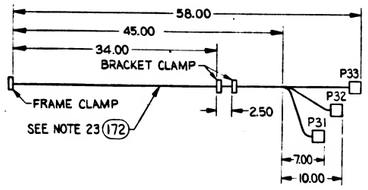

LINE DIAGRAM G (FOR DETAIL G)

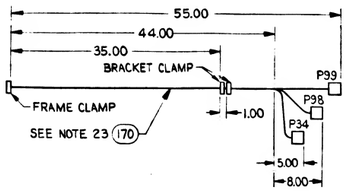

LINE DIAGRAM H (FOR DETAIL H)

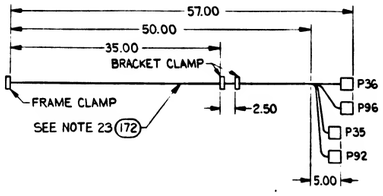

LINE DIAGRAM J (FOR DETAIL J)

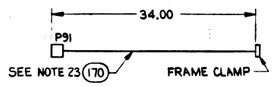

LINE DIAGRAM K (FOR DETAIL K)

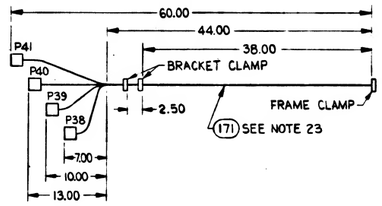

LINE DIAGRAM L (FOR DETAIL L)

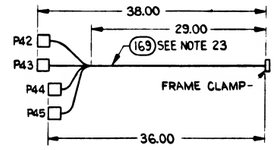

LINE DIAGRAM M (FOR DETAIL M)

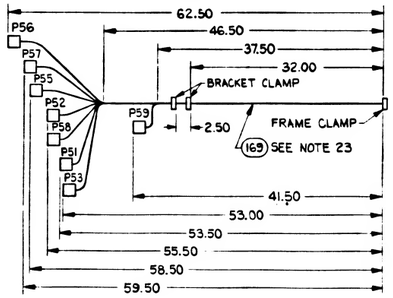

LINE DIAGRAM N (FOR DETAIL N)

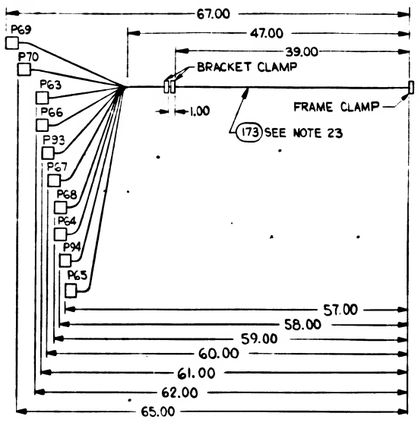

LINE DIAGRAM P (FOR DETAIL P)

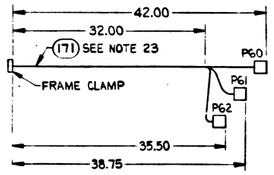

LINE DIAGRAM R (FOR DETAIL R)

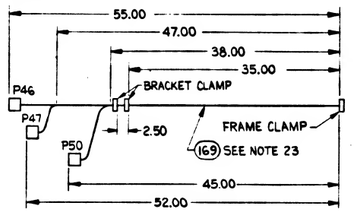

LINE DIAGRAM S (FOR DETAIL S)

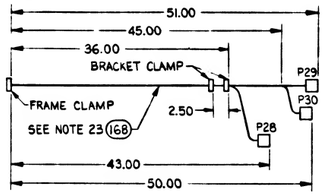

LINE DIAGRAM T (FOR DETAIL T)

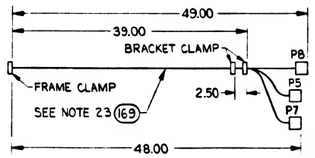

LINE DIAGRAM U (FOR DETAIL U)

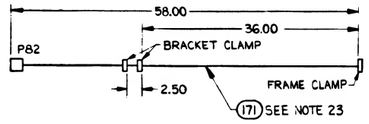

LINE DIAGRAM W (FOR DETAIL W)

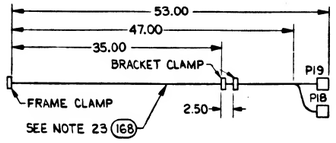

TABLE 2

HARNESS PLUG SYMBOL	MATING DRAWER RECEPTACLE SYMBOL
P1	A2J1
P2	A2J3
P3	A3J1
P4	A3J3
P5	A4J1
P7	A4J3
P9	A26J6
P10	A26J7
P11	A14J2
P14	A5J1
P15	A5J2
P16	A5J3
P17	A5J4
P20	A7J1
P21	A7J2
P22	A7J3
P23	A8J1
P24	[illegible]J1
P25	A9J2
P26	[illegible]9J3
P31	A[illegible]J1
P32	A11J2
P33	A11J3
P34	A12J1
P35	A13J1
P36	A13J2
P37	A14J1
P38	A15J1
P39	A15J2
P40	A15J3
P41	A15J4
P47	A18J2
P50	A18J5
P60	A20J28
P61	A20J29
P62	A20J30
P63	A21J1
P64	A21J2
P65	A21J3
P66	A21J4
P67	A21J5
P68	A21J6
P69	A21J7
P70	A21J8
P71	A22J1
P82	A26J1
P83	A26J2
P84	A26J3
P85	A26J4
P86	A26J5
P90	A30J4
P91	A31J1
P92	A13J3
P93	A21J9
P94	A21J10
P96	A13J4
P98	A12J2
P99	A12J3

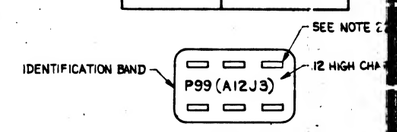

VIEW X-X
SCALE 2:1

TABLE 1

HARNESS PLUG SYMBOL	MATING DRAWER RECEPTACLE SYMBOL
P8	A4J4
P18	A6J1
P19	A6J2
P28	A10J1
P29	A10J2
P30	A10J3
P42	A16A1J1
P43	A16A1J2
P44	A16A2J1
P45	A16A2J2
P46	A18J1
P51	A19J1
P52	A19J2
P53	A19J3
P55	A19J5
P56	A19J6
P57	A19J7
P58	A19J8
P59	A19J10

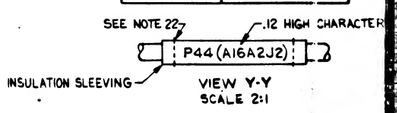

VIEW Y-Y
SCALE 2:1

1/1900943

TABLE 2

HARNESS PLUG SYMBOL	MATING DRAWER RECEPTACLE SYMBOL
P1	A2J1
P2	A2J3
P3	A3J1
P4	A3J3
P5	A4J1
P7	A4J3
P9	A26J6
P10	A26J7
P11	A14J2
P14	A5J1
P15	A5J2
P16	A5J3
P17	A5J4
P20	A7J1
P21	A7J2
P22	A7J3
P23	A8J1
P24	A9J1
P25	A9J2
P26	A9J3
P31	A11J1
P32	A11J2
P33	A11J3
P34	A12J1
P35	A13J1
P36	A13J2
P37	A14J1
P38	A15J1
P39	A15J2
P40	A15J3
P41	A15J4
P47	A18J2
P50	A18J5
P60	A20J28
P61	A20J29
P62	A20J30
P63	A21J1
P64	A21J2
P65	A21J3
P66	A21J4
P67	A21J5
P68	A21J6
P69	A21J7
P70	A21J8
P71	A22J1
P82	A26J1
P83	A26J2
P84	A26J3
P85	A26J4
P86	A26J5
P90	A30J4
P91	A31J1
P92	A13J3
P93	A21J9
P94	A21J10
P96	A13J4
P98	A12J2
P99	A12J3

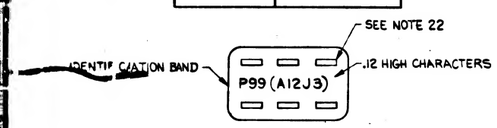

VIEW X-X
SCALE 2:1

TABLE 1

HARNESS PLUG SYMBOL	MATING DRAWER RECEPTACLE SYMBOL
P8	A4J4
P18	A6J1
P19	A6J2
P28	A10J1
P29	A10J2
P30	A10J3
P42	A16A1J1
P43	A16A1J2
P44	A16A2J1
P45	A16A2J2
P46	A18J1
P51	A19J1
P52	A19J2
P53	A19J3
P55	A19J5
P56	A19J6
P57	A19J7
P58	A19J8
P59	A19J10

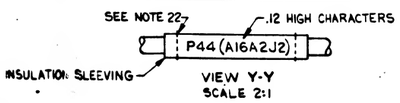

VIEW Y-Y
SCALE 2:1

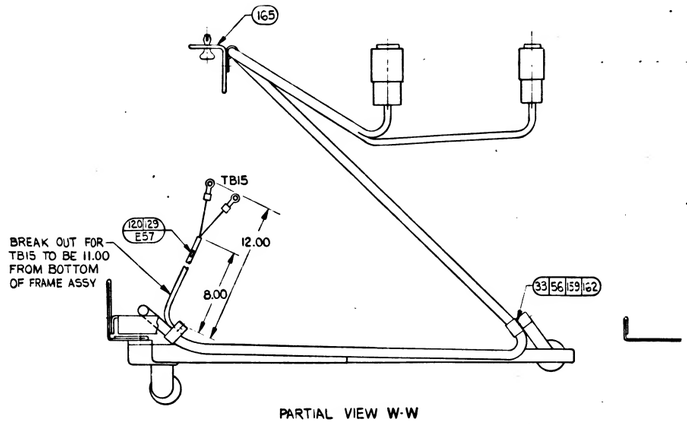

PARTIAL VIEW W-W

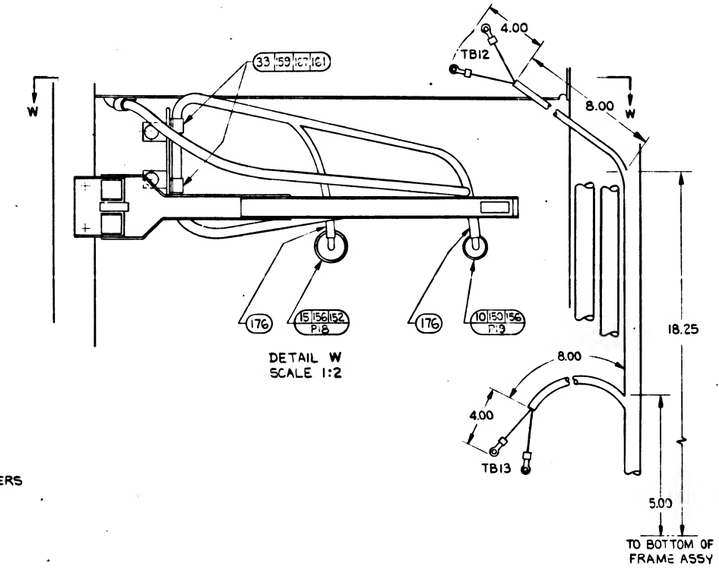

DETAIL W
SCALE 1:2

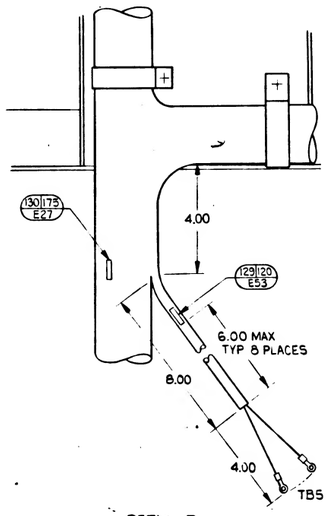

DETAIL Z
SCALE - NONE

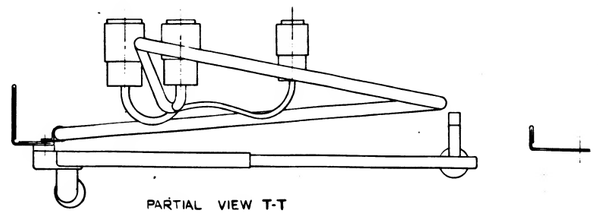

PARTIAL VIEW T-T

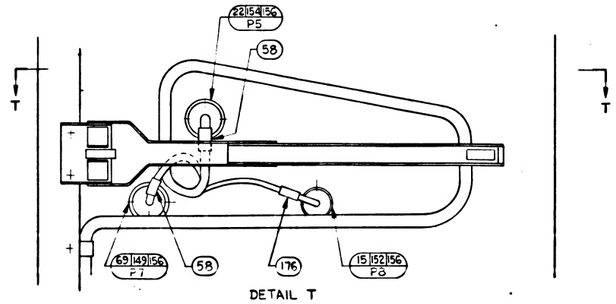

DETAIL T
SCALE 1:2

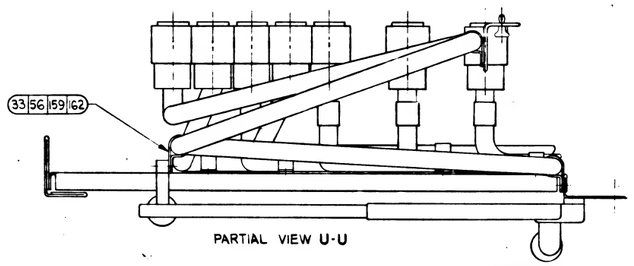

PARTIAL VIEW U-U

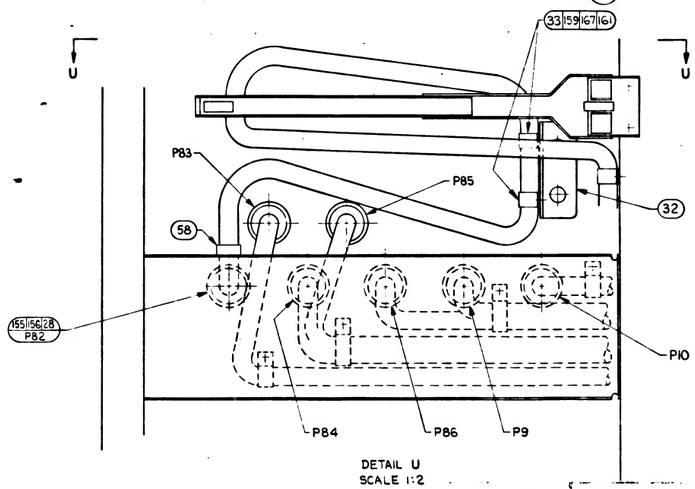

DETAIL U
SCALE 1:2

REVISIONS

SYM	ZONE	DESCRIPTION	CHG NO	DATE	APPD
		SEE SHT 1 FOR REVISION RECORD			

FOR INFORMATION ONLY

CLASS B RELEASE TDR No._____ DATE

UNLESS OTHERWISE SPECIFIED DIMENSIONS ARE IN INCHES TOLERANCES ON FRACTIONS ± — DECIMALS ± — ANGLES ± — DO NOT SCALE THIS DRAWING	AC SPARK PLUG DIVISION, GMC MILWAUKEE, WISCONSIN	MANNED SPACECRAFT CENTER HOUSTON, TEXAS
	ACSP PN	WIRING HARNESS "B" & FRAME ASSEMBLY
	DRAWN 3 MAR DATE	
	CHECKED 17 MAR 66	
	APPROVAL	
	APPROVAL	
MATERIAL	NASA APPROVAL	CODE IDENT NO / SIZE J / 1900943
CONTRACT NAS 9-497	MIT APPROVAL	SCALE — / SHEET 186 OF 186

1900943 SH 186

1900943

2/1900943

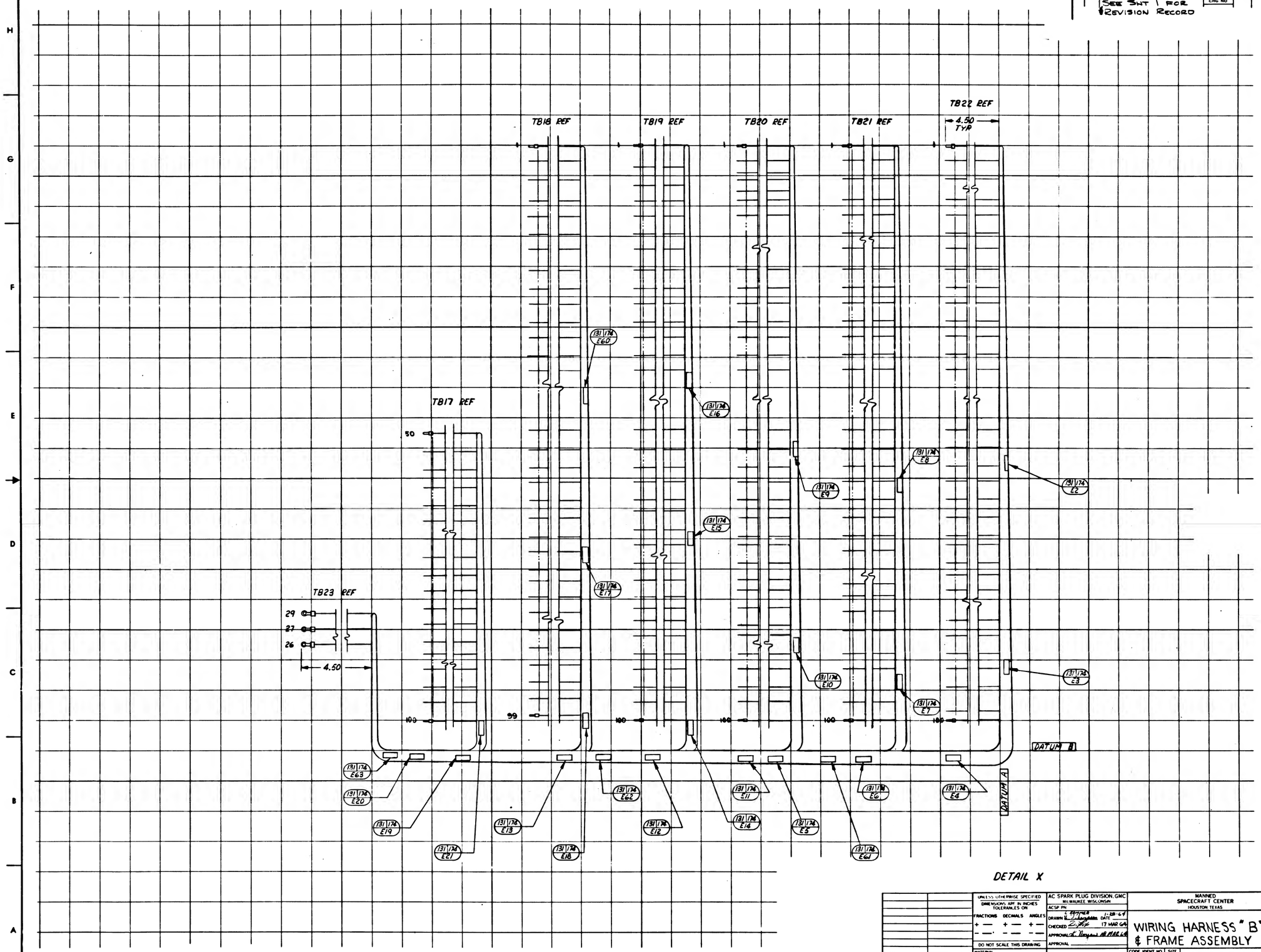

DETAIL X

REVISIONS				
SYM	ZONE	DESCRIPTION	DATE	APPD
		SEE SHT 1 FOR REVISION RECORD		

UNLESS OTHERWISE SPECIFIED DIMENSIONS ARE IN INCHES TOLERANCES ON FRACTIONS ± — DECIMALS ± — ANGLES ± —

DO NOT SCALE THIS DRAWING

MATERIAL

NEXT ASSY | USED ON

APPLICATION

AC SPARK PLUG DIVISION, GMC
MILWAUKEE, WISCONSIN

ACSP PN

DRAWN DATE 11-28-64

CHECKED 17 MAR 64

APPROVAL

APPROVAL

NASA APPROVAL

MIT APPROVAL

CONTRACT NAS9-497

MANNED SPACECRAFT CENTER
HOUSTON TEXAS

WIRING HARNESS "B" & FRAME ASSEMBLY

CODE IDENT NO | SIZE E | 1900943

SCALE FULL | SHEET 12 OF 185

1900943 AR

1900943 SHT 12 OF 185

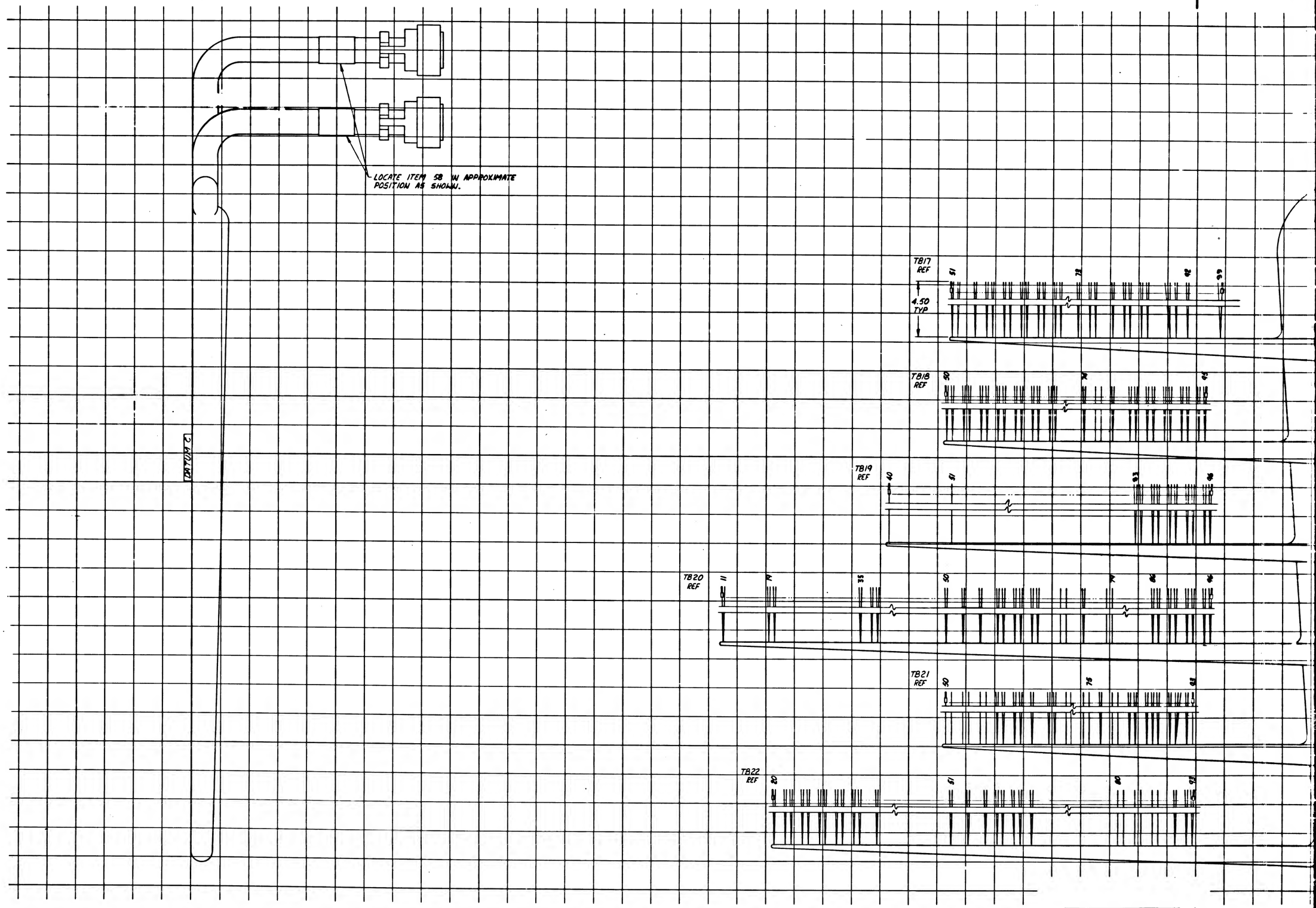

1900943

1719000943

REVISIONS					
SYM	ZONE	DESCRIPTION	CHG NO	DATE	APPD
		SEE SHT 1 FOR REVISION RECORD			

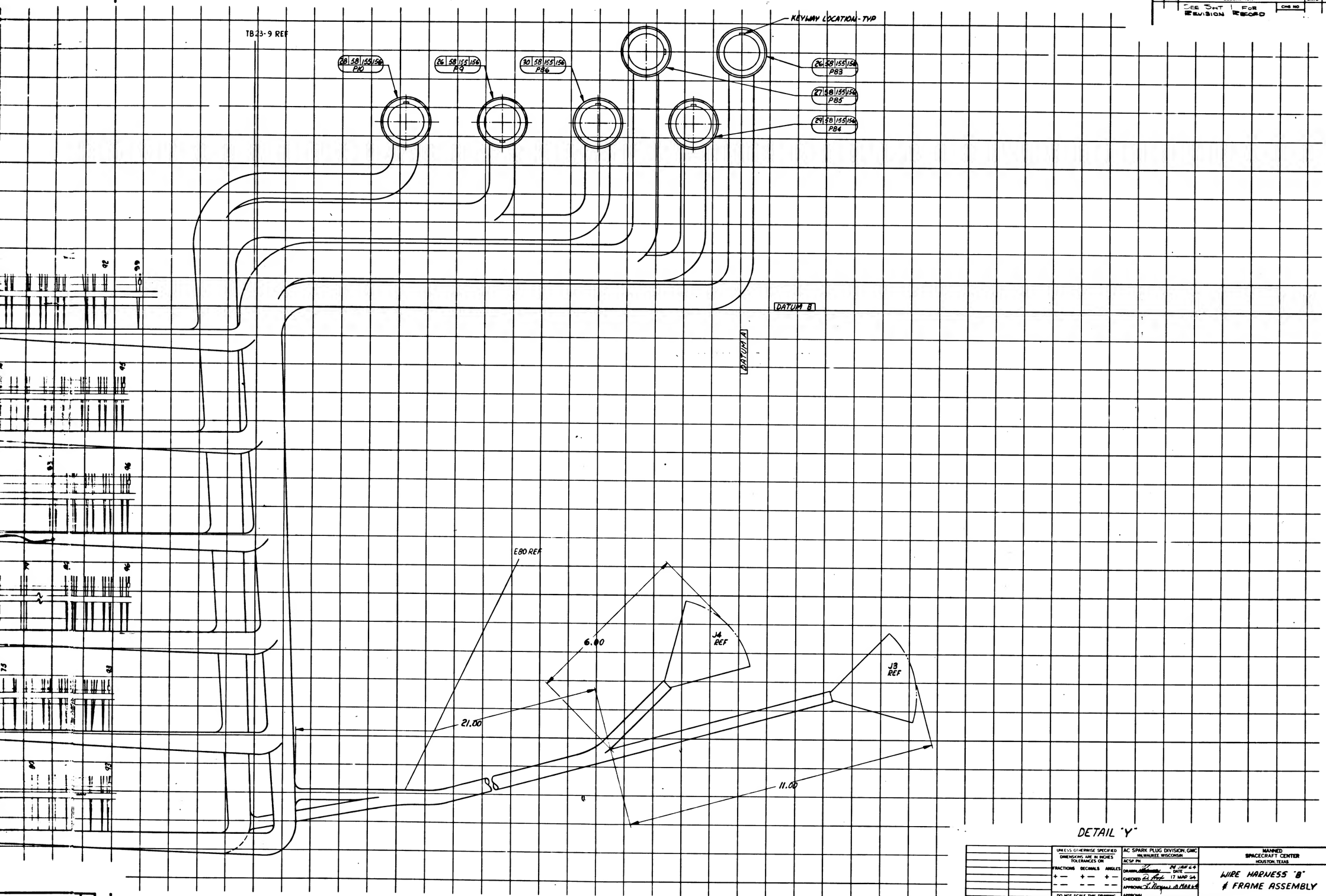

DETAIL "Y"

NEXT ASSY	USED ON	UNLESS OTHERWISE SPECIFIED DIMENSIONS ARE IN INCHES TOLERANCES ON FRACTIONS ± — DECIMALS ± — ANGLES ± —	AC SPARK PLUG DIVISION, GMC MILWAUKEE, WISCONSIN
APPLICATION		DO NOT SCALE THIS DRAWING	ACSP PN
		MATERIAL	DRAWN DATE 24 JAN 64
			CHECKED 17 MAR 64
			APPROVAL 10 MAR 64
			APPROVAL
		CONTRACT NAS 9-497	NASA APPROVAL
			INT APPROVAL

MANNED SPACECRAFT CENTER HOUSTON, TEXAS

WIRE HARNESS "B" & FRAME ASSEMBLY

CODE IDENT NO.	SIZE	
	J2	1900943
SCALE 1:1		SHEET 1 OF 1

1900943 AR

900943

27 1900943

APPLICATION	
NEXT ASSY	USED ON
1900064	

REVISIONS

SYM	DESCRIPTION	DATE	APPROVAL
A	CHANGE IN ACCORDANCE WITH CM 193236	21 JAN 64	JJJ DLF
B	CHANGE IN ACCORDANCE WITH CM 193239	24 JAN 64	JJJ DLF
C	CHANGE IN ACCORDANCE WITH CM 193516	29 JAN 64	JJJ DLF
D	CHANGE IN ACCORDANCE WITH CM 193681	2 FEB 64	JJJ DLF
E	CHANGE IN ACCORDANCE WITH CM 193761	5 FEB 64	JJJ DLF
F	CHANGE IN ACCORDANCE WITH CM 193903	10 FEB 64	JJJ DLF
G	CHANGE IN ACCORDANCE WITH CM 194424	13 FEB 64	JJJ DLF
H	CHANGE IN ACCORDANCE WITH CM 194497	18 FEB 64	JJJ DLF
J	CHANGE IN ACCORDANCE WITH CM 194515	23 FEB 64	JJJ DLF
K	CHANGE IN ACCORDANCE WITH CM 194618	3 MAR 64	JJJ DLF

FOR INFORMATION ONLY

CLASS B RELEASE TDR No. 05624 DATE 1/7/64

REV AR AR AR

PENNANT NOTE — GENERAL NOTES

1 SEE CONDUCTOR CHART, PENNANT NOTE 1.

2 SEE CONDUCTOR CHART, PENNANT NOTE 2.

3 INTERPRET DRAWING IN ACCORDANCE WITH STANDARDS PRESCRIBED BY MIL-D-70327.

4 MARK CONDUCTOR IDENTIFICATION PER ND1002019.

5 MARK CONDUCTOR IDENTIFICATION ON SINGLE CONDUCTORS PER ND1002019 OMITTING ALL SUFFIX LETTERS EXCEPT A AND B.

6 SPACING OF CONDUCTOR IDENTIFICATION SHALL BE EVERY 1.2 INCHES.

7 SPIRALLING OF THE MARKING IS ALLOWED.

8 MARK SLEEVING WITH REFERENCE DESIGNATION AS SHOWN .12 INCH HIGH, COLOR BLACK PER ND1002019.

9 MARK SLEEVING OF MULTI-CONDUCTORS WITH THE CONDUCTOR NUMBER .12 INCH HIGH, COLOR BLACK, PER ND1002019 WHEN SLEEVING ITEM NUMBERS FOLLOW AN A OR T IN THE ACCESSORIES ITEM NUMBER FIELD.

10 A OR T PREFIX IN THE ACCESSORIES ITEM NUMBER COLUMN INDICATES THE READING POSITION AWAY FROM TERMINATION OR TOWARD TERMINATION RESPECTIVELY, OF THE WIRE MARKER SLEEVE.

11 LACE HARNESS USING ITEM 180

12 IDENTIFY USING DRAWING NO. AND REVISION LETTER PER ND1002019 (ES-267).

13 SOLDER PER MIL-STD-440 USING ITEMS 181 AND 182

14 Y OR N IN TINNED COLUMN INDICATES YES OR NO.

PENNANT NOTE — GENERAL NOTES

15 A LETTER WITH AN ASTERISK SUFFIX INDICATES A LOWER CASE LETTER.

16 BREAKOUTS OF INDIVIDUAL OR GROUPS OF CONDUCTORS ARE MINIMUM CONFIGURATION.

17 VENDOR ITEM - SEE SPECIFICATION CONTROL DRAWING.

18 SELECT AS REQUIRED.

19 FILL THE SPACE BETWEEN WIRE AND GROMMET USING A SUFFICIENT AMOUNT OF ITEM 156 TO MAKE ASSEMBLY SECURE IN THE CLAMP PRIOR TO THE CLAMP HALVES SEATING. SEE TYPICAL VIEW AD-AD SHOWING ASSEMBLY OF GROMMET AND ITEM 156.

20 THE FOLLOWING CONDUCTORS ARE TO BE TWISTED TOGETHER IN ACCORDANCE WITH THE BEST COMMERCIAL PRACTICE. THEY SHALL BE TWISTED WITH A LAY NOT GREATER THAN 14 TIMES NOR LESS THAN 8 TIMES THE PITCH DIA.
B36K, B36L, B36R, B36Y

21 DELETED

22 MARK ITEMS 58 AND 176 PER ND1002019, COLOR BLACK, HEIGHT AS SHOWN IN VIEWS X-X AND Y-Y. MARK WITH HARNESS PLUG DESIGNATION AND MATING DRAWER RECEPTACLE SYMBOL. FOR ITEM 58 SEE TABLE 2 AND VIEW X-X. FOR ITEM 176 SEE TABLE 3 AND VIEW Y-Y. SEE NOTE 24 FOR FASTENING.

PENNANT NOTE — GENERAL NOTES

23 TUBING SHALL EXTEND INTO FRAME CLAMP AND 1 INCH BEYOND AT ONE END, THE OTHER END SHALL TERMINATE AT THE FIRST SEPARATION IN THE BUNDLE. IF ONLY A SINGLE CABLE EXISTS, TUBING SHALL EXTEND INTO FRAME CLAMP AND 1 INCH BEYOND AT ONE END, THE OTHER END SHALL TERMINATE 3 INCHES FROM THE STRAIN RELIEF CLAMP OF THE CONNECTOR.

24 FASTEN ITEMS 58 AND 176 WITH ITEM 180. WRAP BAND TO CONFORM TO THE HARNESS CONFIGURATION

25 TUBING SHALL EXTEND WITHIN 1 INCH OF BREAKOUT ON ONE END AND TERMINATE 3 INCHES FROM THE STRAIN RELIEF CLAMP OF THE CONNECTOR AT THE OTHER END.

26 MARK BAND WITH AC SPARK PLUG ABBREVIATION ACSK AND IDENTIFY USING DRAWING NO. AND REVISION LETTER PER MIL-STD-130 (ES-267), SERIALIZE PER ND1002023, CHARACTERS .12 HIGH, COLOR BLACK PER ND1002019. SEE NOTE 24 FOR FASTENING.

THE SUFFIX LETTER OF A CONDUCTOR IDENTIFICATION NUMBER INDICATES CONDUCTOR SHIELDING, COLOR, OR MARKING.
A - FROM END SHIELD
B - TO END SHIELD
E - GRAY
K - WHITE WITH LETTER K, OR WHITE WITH BLACK TRACER
L - WHITE WITH LETTER L, OR WHITE WITH BLUE TRACER
R - WHITE WITH LETTER R, OR WHITE WITH RED TRACER
W - WHITE OR WHITE WITH LETTER W
X - COAX OUTER CONDUCTOR
Y - WHITE WITH LETTER Y, OR WHITE WITH YELLOW TRACER

PENNANT NOTE — GENERAL NOTES

TOLERANCE CHART, UNLESS OTHERWISE SPECIFIED ---

APPLICABLE LENGTH FOR WIRE OR CABLE, STRIP WIRE, STRIP JACKET, CUT WIRE OR CUT SHIELD.	TOLERANCE				
	WIRE OR CABLE	STRIP WIRE	STRIP JACKET	CUT WIRE	CUT SHIELD
UNDER 1 INCH	+ .06-.00	+.03-.00	+.06-.06	+.06-.06	+.06-.06
1 INCH TO 6 INCHES	+ .50-.00	+.06-.00	+.25-.25	+.25-.25	+.25-.25
6 INCHES TO 6 FEET	+1.00-.00		+.50-.50	+.50-.50	+.50-.50
OVER 6 FEET	+2.00-.00				

LIST OF MATERIALS

PENNANT NOTE	ITEM	QTY	PART NO	DESCRIPTION
	1	1	1900351-011	HARNESS FRAME MECHANICAL ASSY.
	2	1	1900943-002	WIRE, ND1002181 TYPE 2 CLASS 1 T2 16AWG WHT. WITH LETTER L, WHT. WITH LETTER R 50 FT. TOTAL LENGTH
	3			DELETED (1900943-003)
	4	1	MS3106A18-1P	(1897084-010) CONNECTOR PLUG ELECTRICAL
17	5	7	1015922-001	CONNECTOR PLUG ELECTRICAL
	7	1	1900943-007	WIRE, ND1002181 TYPE 1 CLASS 4 22AWG WHT. WITH WHT. JACKET 312 FT. TOTAL LENGTH
	8	1	1900943-008	WIRE, ND1002181 TYPE 2 CLASS 1 T2 22AWG WHT. WITH LETTER L, WHT. WITH LETTER R 60 FT. TOTAL LENGTH
	9			DELETED (1900943-009)
	10	1	MS3126F12-10P	(1897038-100) CONNECTOR PLUG, ELECTRICAL
	11	1	MS3126F12-10S	(1897039-100) CONNECTOR PLUG, ELECTRICAL
	12	1	1900943-012	WIRE, ND1002181 TYPE 2 CLASS 1 T2 24AWG WHT. WITH LETTER L, WHT. WITH LETTER R 60 FT. TOTAL LENGTH
	13	2	MS3126F14-19S	(1897040-190) CONNECTOR PLUG, ELECTRICAL
	15	10	MS3126F16-8S	(1897042-080) CONNECTOR PLUG, ELECTRICAL
	16	1	1900943-016	WIRE, ND1002181 TYPE 1 CLASS 1 20AWG WHT. 500 FT. TOTAL LENGTH

LIST OF MATERIALS

PENNANT NOTE	ITEM	QTY	PART NO	DESCRIPTION
	17	2	MS3126F20-16P	(1897043-160) CONNECTOR PLUG, ELECTRICAL
	18	1	MS3126F20-41P	(1897043-410) CONNECTOR PLUG, ELECTRICAL
	19	1	MS3126F20-41S	(1897044-410) CONNECTOR PLUG, ELECTRICAL
	20	1	MS3126F12-10SW	(1897039-101) CONNECTOR PLUG, ELECTRICAL
	21	1	MS3126F16-8SW	(1897042-081) CONNECTOR PLUG, ELECTRICAL
	22	2	MS3126F22-55P	(1897045-550) CONNECTOR PLUG, ELECTRICAL
	23	1	MS3126F22-55PW	(1897045-551) CONNECTOR PLUG, ELECTRICAL
	24	1	MS3126F22-55PX	(1897045-552) CONNECTOR PLUG, ELECTRICAL
	26	10	MS3126F24-61S	(1897048-610) CONNECTOR PLUG, ELECTRICAL
	27	8	MS3126F24-61SW	(1897048-611) CONNECTOR PLUG, ELECTRICAL
	28	8	MS3126F24-61SX	(1897048-612) CONNECTOR PLUG, ELECTRICAL
	29	2	MS3126F24-61SY	(1897048-613) CONNECTOR PLUG, ELECTRICAL
	30	2	MS3126F24-61SZ	(1897048-614) CONNECTOR PLUG, ELECTRICAL
	32	13	1900448-011	CABLE CLAMP BRACKET ASSY
18	33	107	MS21919-WDG2	THRU MS21919-WDG32 (1897073-202 THRU 1897073-224) CLAMP-LOOP TYPE, CUSHIONED
	34			DELETED
	35			DELETED
	36			DELETED

LIST OF MATERIALS

PENNANT NOTE	ITEM	QTY	PART NO	DESCRIPTION
	37			DELETED
17	38	22	1006783- 44	SCREW, BUTTON HEAD
	39			DELETED (1897082-113)
	40	1	1900943-040	WIRE, ND1002181 TYPE 1, CLASS 1, 16AWG WHT. 100 FT. TOTAL LENGTH
	41	1	1900943-041	WIRE, ND1002181 TYPE 1, CLASS 1, 22AWG WHT. 3012 FT. TOTAL LENGTH
	42	1	1900943-042	WIRE, ND1002181 TYPE 1, CLASS 1, 24AWG WHT. 10,101 FT. TOTAL LENGTH
	44	1	1900943-044	WIRE, ND1002181 TYPE 2, CLASS 4, 16AWG WHT. JACKET, WHT/BLU, WHT/RED 100 FT. TOTAL LENGTH
	45	1	1900943-045	WIRE, ND1002181 TYPE 2, CLASS 4, 20AWG WHT. JACKET, WHT/BLU, WHT/RED 400 FT. TOTAL LENGTH
	46	1	1900943-046	WIRE, ND1002181 TYPE 2, CLASS 4, 24AWG WHT. JACKET, WHT/BLU, WHT/RED 3013 FT. TOTAL LENGTH
	47	1	1900943-047	WIRE, ND1002181 TYPE 2, CLASS 4, 22AWG WHT. JACKET, WHT/BLU, WHT/RED 500 FT. TOTAL LENGTH
17	48	277	1000243- 8	FERRULE, ELEC. COND.
17	49	2	1000243- 10	FERRULE, ELEC. COND.
17	50	26	1000243- 14	FERRULE, ELEC. COND.

LIST OF MATERIALS

PENNANT NOTE	ITEM	QTY	PART NO	DESCRIPTION
17	51	12	1000243- 23	FERRULE, ELEC. COND.
17	52	277	1000242- 8	FERRULE, ELEC. COND.
17	53	4	1000242- 11	FERRULE, ELEC. COND.
17	54	26	1000242- 12	FERRULE, ELEC. COND.
17	55	12	1000242- 18	FERRULE, ELEC. COND.
	56	50	MS35338- 81	LOCKWASHER
	57			DELETED (1897006-017)
22	58	54	1016128-011	BAND, IDENTIFICATION
	59	1	MS3126F22-55SY	(1897046-553) CONNECTOR PLUG, ELECTRICAL
	65	1	1900943-065	COAX-MIL-C-17 RG188/U 1500 FT. TOTAL LENGTH
	66	1	MS3126F20-16S	(1897044-160) CONNECTOR PLUG, ELECTRICAL
	67			DELETED (1897044-411)
	68	1	MS3126F10-6S	(1897026-060) CONNECTOR PLUG, ELECTRICAL
17	69	4	1015907-100	CONNECTOR PLUG, ELECTRICAL
17	70	3	1015907-101	CONNECTOR PLUG, ELECTRICAL
17	71	2	1015907-102	CONNECTOR PLUG, ELECTRICAL
17	72	1	1015907-103	CONNECTOR PLUG, ELECTRICAL
17	73	1	1015907-104	CONNECTOR PLUG, ELECTRICAL

LIST OF MATERIALS

PENNANT NOTE	ITEM	QTY	PART NO	DESCRIPTION
	77	1	MS3127E24-61PY	(1897055-613) CONNECTOR, RECEPTACLE
	78	1	MS3127E24-61PZ	(1897055-614) CONNECTOR, RECEPTACLE
	79	1	MS3127E24-61S	(1897056-610) CONNECTOR, RECEPTACLE
	80			DELETED (1897056-611)
	81			DELETED (1897056-612)
	82			DELETED (1897056-613)
17	83	26	1010490-194	INSULATION-SLEEVING
17	84	347	1010490-196	INSULATION-SLEEVING
17	85	464	1010490-198	INSULATION-SLEEVING
17	86	168	1000243- 6	FERRULE-ELECT. COND.
17	87	168	1000242- 5	FERRULE-ELECT. COND.
	88			DELETED (1015905- 61)
17	89	80	1015908- 11	CONTACT COAX PIN
17	90	80	1015908- 31	BODY COAX OUTER FEMALE
17	91	80	1015908- 51	RING COAX CONNECTOR
	92			DELETED (1010490-202)
	98	1	1900943-098	WIRE, ND1002181 TYPE 3 CLASS 4 22AWG, WHT/BLU, WHT/RED, WHT/YEL WITH WHT. JACKET 500 FT. TOTAL LENGTH

MANNED SPACECRAFT CENTER HOUSTON, TEXAS | SIZE A | 1900943
SCALE-NONE | REV LTR AU | SHEET 11 OF 188

LIST OF MATERIALS

PENNANT NOTE	ITEM	QTY	PART NO	DESCRIPTION
	99	1	1900943-099	WIRE, ND1002181 TYPE 3 CLASS 4 20AWG, WHT/BLU, WHT/RED, WHT/YEL WITH WHT. JACKET 500 FT. TOTAL LENGTH
17	102	2	1000243- 15	FERRULE, ELEC.
17	103	2	1000243- 11	FERRULE, ELEC.
17	104	2	1000242- 16	FERRULE, ELEC.
17	107	1230	1015966-001	JACK-WIRE TIP (AWG 24-22)
17	108	21	1015966-003	JACK-WIRE TIP (AWG 20)
17	111	19/	1015902- 3	TERMINAL LUG-RING TONGUE, CRIMP
	112	1	MS3127E22-55S	(1897054-550) CONNECTOR-RECEPTACLE, ELEC.
	116			DELETED (1015864-168)
17	117	17	1000243- 3	FERRULE-ELEC.
17	118	17	1000243- 4	FERRULE-ELEC.
	119			DELETED (1000243- 15)
17	120	58	1010490-200	INSULATION SLEEVING, ELEC.
	122	1	MS3127E20-41SW	(1897052-411) CONNECTOR-RECEPTACLE
	126	1	MS3127E22-55PX	(1897053-552) CONNECTOR-RECEPTACLE
	127	1	MS3127E22-55SW	(1897054-551) CONNECTOR-RECEPTACLE
17	129	37	1016006-001	SPLICE REDUCER

MANNED SPACECRAFT CENTER HOUSTON, TEXAS | SIZE A | 1900943
SCALE-NONE | REV LTR AU | SHEET 12 OF 188

LIST OF MATERIALS

PENNANT NOTE	ITEM	QTY	PART NO	DESCRIPTION
17	130	16	1016006-002	SPLICE REDUCER
17	131	25	1016006-003	SPLICE REDUCER
	132			DELETED (1015902-008)
	133			DELETED
	141	1	MS3126F24-61PZ	(1897047-614) CONNECTOR-PLUG ELEC.
	143	1	MS3127E20-41PW	(1897051-411) CONNECTOR-RECEPTACLE
	144	1	MS3127E14-15S	(1897116-150) CONNECTOR-RECEPTACLE
	145	1	MS3127E22-55PY	(1897053-553) CONNECTOR-RECEPTACLE
	146	1	MS3127E22-55PZ	(1897053-554) CONNECTOR-RECEPTACLE
	147	1	MS3127E22-55SX	(1897054-552) CONNECTOR-RECEPTACLE
	148	1	MS3127E22-55SY	(1897054-553) CONNECTOR-RECEPTACLE
17	149	2	1016282- 10	GROMMET, CONNECTOR
17	150	3	1016282- 12	GROMMET, CONNECTOR
17	151	2	1016282- 14	GROMMET, CONNECTOR
17	152	12	1016282- 16	GROMMET, CONNECTOR
17	153	5	1016282- 20	GROMMET, CONNECTOR
17	154	22	1016282- 22	GROMMET, CONNECTOR
17	155	31	1016282- 24	GROMMET, CONNECTOR

MANNED SPACECRAFT CENTER HOUSTON, TEXAS | SIZE A | 1900943
SCALE-NONE | REV LTR AR | SHEET 13 OF 188

LIST OF MATERIALS

PENNANT NOTE	ITEM	QTY	PART NO	DESCRIPTION
	156	77	1901390	TAPE, FILLER
17	157	19	1016281-181	SOCKET, CONTACT
	158	5	MS35234-69	SCREW, PAN HD, SLOTTED
	159	108	1897006- 19	WASHER, FLAT
	160	5	1901464-004	SPACER
	161	58	1896990-011	NUT, SELF LOCKING
17	162	50	1006783-043	SCREW, BUTTON HD
	163	2	1901464-002	SPACER
17	164	2	1006783-048	SCREW, BUTTON HD
	165	2	1900448-021	CABLE CLAMP BRACKET ASSY
17	166	2	1016281-180	PIN, CONTACT
17	167	31	1006783-045	SCREW, BUTTON HD.
	168	1	1900943-100	TUBING, MIL-I-7444, TYPE III, BLK, FLEX - .50 DIA - 12 FT TOTAL LENGTH
	169	1	1900943-101	TUBING, MIL-I-7444, TYPE III, BLK, FLEX - .75 DIA - 13 FT TOTAL LENGTH
	170	1	1900943-102	TUBING, MIL-I-7444, TYPE III, BLK, FLEX - .88 DIA - 7 FT TOTAL LENGTH
	171	1	1900943-103	TUBING, MIL-I-7444, TYPE III, BLK, FLEX - 1.00 DIA - 16 FT TOTAL LENGTH

MANNED SPACECRAFT CENTER HOUSTON, TEXAS | SIZE A | 1900943
SCALE-NONE | REV LTR AR | SHEET 14 OF 188

PENNANT LIST OF MATERIALS

NOTE	ITEM	QTY	PART NO	DESCRIPTION
	172	1	1900943-104	TUBING, MIL-I-7444, TYPE III, BLK, FLEX - 1.25 DIA - 20 FT TOTAL LENGTH
	173	1	1900943-105	TUBING, MIL-I-7444, TYPE III, BLK, FLEX - 1.50 DIA - 55 INCHES TOTAL LENGTH
17	174	25	1010490-286	INSULATION SLEEVING
17	175	16	1010490-288	INSULATION SLEEVING
22	176	19	1015864-462	INSULATION SLEEVING
	177			DELETED (1900943-106)
	178	1	1900943-107	WIRE PER ND10C2181, TYPE 1, CLASS 1, 8AWG, WHT, 20 FT. TOTAL LENGTH.
17	179	7	1016048- 15	TERMINAL LUG
	180	AR	MIL-T-713	LACING TAPE TYPE P, CLASS 2, BLK (ES-2732 NO. 18 AND 24)
	181	AR	QQ-S-571	SOLDER SN60 (ES-2175 ALLOY 1)
	182	AR	QQ-S-571	FLUX TYPE AR (ES-2175 TYPE 1 OR 2) OR MIL-F-14256 FLUX (ES-2798)
17	183	1	1016048- 18	TERMINAL LUG

MANNED SPACECRAFT CENTER HOUSTON, TEXAS	SIZE A	1900943
SCALE NONE	REV LTR AR	SHEET 15 OF 188

CONDUCTOR INDIVIDUAL LENGTH NUMBER	ITEM NO.	2	FROM CUT WIRE OR SHIELD STRIP WIRE OR JACKET CIRCUIT POINT	2	T I N	2	TERMINATION SPEC. 1 ITEM NO.	NO.	TO CUT WIRE OR SHIELD STRIP WIRE OR JACKET CIRCUIT POINT	2	T I N	2	TERMINATION SPEC. 1 ITEM NO.	NO.
B 3	41		E 22	25	N				TB27- 1	16	N		107	
B 4	41		E 22	25	N				TB27- 4	16	N		107	
B 5	41		E 22	25	N				TB27- 7	16	N		107	
B 6	41		E 22	25	N				TB27- 13	16	N		107	
B 7	41		E 16	25	N				TB19- 9	16	N		107	
B 8	41		E 16	25	N				TB19- 7	16	N		107	
B 9	41		E 16	25	N				TB19- 4	16	N		107	
B 10	41		E 16	25	N				TB19- 1	16	N		107	
B 11	44			225		200	83	7		300		270	51 55 835	
B 11B	41		E 47	25	N				SHLD B 11	25	N			
B 11L			P30-E	25	N				TB14- 3	20	N		111	
B 11R			P30-D	25	N				TB14- 1	20	N		111	
B 12	44			225		200	83	7		300		270	51 55 836	
B 12B	41		E 57	25	N				SHLD B 12	25	N			
B 12L			P18-E	25	N				TB15- 3	20	N		111	
B 12R			P18-D	25	N				TB15- 1	20	N		111	
B 13	45			225		200	84	7		300		270	84	7
B 13B	41		E 50	25	N				SHLD B 13	25	N			

1 THE STD CONDUCTOR TERMINATION FIGURES ARE PER
2 DIMENSIONS ARE IN INCHES AND TWO PLACE DECIMALS.

MANNED SPACECRAFT CENTER HOUSTON, TEXAS | SIZE A | 1900943

SCALE - NONE | REV LTR AR | SHEET 16 OF 188

MIL 2089 - 4-65 WIR

CONDUCTOR INDIVIDUAL LENGTH NUMBER	ITEM NO.	2	FROM CUT WIRE OR SHIELD STRIP WIRE OR JACKET CIRCUIT POINT	2	T I N	2	TERMINATION SPEC. 1 ITEM NO.	NO.	TO CUT WIRE OR SHIELD STRIP WIRE OR JACKET CIRCUIT POINT	2	T I N	2	TERMINATION SPEC. 1 ITEM NO.	NO.
B 13L			P37-F*	25	N				TB 2- 2	20	N		111	
B 13R			P37-G*	25	N				TB 2- 4	20	N		111	
B 14	44			225		200	83	7		300		270	51 55 836	
B 14B	41		E 46	25	N				SHLD B 14	25	N			
B 14L			P50-E	25	N				TB11- 9	20	N		111	
B 14R			P50-D	25	N				TB11- 7	20	N		111	
B 15	41		P34-U	25	N				TB 7- 7	20	N		111	
B 16	40		P34-W	25	N		157		TB 7- 2	20	N		111	
B 17	40		P34-X	25	N		157		TB 7- 5	20	N		111	
B 18	41		P99-F*	25	N				TB 7- 10	20	N		111	
B 19	44			225		200	83	7		300		270	51 55 836	
B 19B	41		E 43	25	N				SHLD B 19	25	N			
B 19L			P38-E	25	N				TB 3- 3	20	N		111	
B 19R			P38-D	25	N				TB 3- 1	20	N		111	
B 20	41		E 18	25	N				TB18- 49	16	N		107	
B 21	41		E 18	25	N				TB18- 52	16	N		107	
B 22	41		E 18	25	N				TB18- 55	16	N		107	
B 23	41		E 18	25	N				TB18- 58	16	N		107	

1 THE STD CONDUCTOR TERMINATION FIGURES ARE PER
2 DIMENSIONS ARE IN INCHES AND TWO PLACE DECIMALS.

MANNED SPACECRAFT CENTER HOUSTON, TEXAS | SIZE A | 1900943

SCALE - NONE | REV LTR AR | SHEET 17 OF 188

CONDUCTOR INDIVIDUAL LENGTH NUMBER	ITEM NO.	2	FROM CUT WIRE OR SHIELD STRIP WIRE OR JACKET CIRCUIT POINT	2	T I N	2	TERMINATION SPEC. 1 ITEM NO.	NO.	TO CUT WIRE OR SHIELD STRIP WIRE OR JACKET CIRCUIT POINT	2	T I N	2	TERMINATION SPEC. 1 ITEM NO.	NO.
B 24	41		E 18	25	N				TB18- 61	16	N		107	
B 25	41		E 18	25	N				TB18- 64	16	N		107	
B 26	41		E 18	25	N				TB18- 67	16	N		107	
B 27	41		E 18	25	N				TB18- 70	16	N		107	
B 28	41		E 18	25	N				TB18- 73	16	N		107	
B 29	41		E 60	25	N				TB18- 1	16	N		107	
B 30	41		E 60	25	N				TB18- 3	16	N		107	
B 31	41		E 60	25	N				TB18- 6	16	N		107	
B 32	41		E 60	25	N				TB18- 9	16	N		107	
B 33	41		E 60	25	N				TB18- 12	16	N		107	
B 34	40		P24-EE	25	N		157		TB 1- 6	20	N		111	
B 35	40		P24-FF	25	N		157		TB 1- 9	20	N		111	
B 36							120						120	
B 36K	41		P24-PP	25	N				TB 2- 2	20	N		111	
B 36L	41		P24-LL	25	N				TB 1- 3	20	N		111	
B 36R	41		P24-NN	25	N				TB 1- 2	20	N		111	
B 36Y	41		P24-MM	25	N				TB 1- 4	20	N		111	
B 37	41		E 8	25	N				TB21- 27	16	N		107	

1 THE STD CONDUCTOR TERMINATION FIGURES ARE PER
2 DIMENSIONS ARE IN INCHES AND TWO PLACE DECIMALS.

MANNED SPACECRAFT CENTER HOUSTON, TEXAS | SIZE A | 1900943

SCALE - NONE | REV LTR AR | SHEET 18 OF 188

MIL 2089 - 4-65 WIR

CONDUCTOR INDIVIDUAL LENGTH NUMBER	ITEM NO.	2	FROM CUT WIRE OR SHIELD STRIP WIRE OR JACKET CIRCUIT POINT	2	T I N	2	TERMINATION SPEC. 1 ITEM NO.	NO.	TO CUT WIRE OR SHIELD STRIP WIRE OR JACKET CIRCUIT POINT	2	T I N	2	TERMINATION SPEC. 1 ITEM NO.	NO.
B 38	41		E 8	25	N				TB21- 24	16	N		107	
B 39	41		E 8	25	N				TB21- 21	16	N		107	
B 40	41		E 8	25	N				TB21- 18	16	N		107	
B 41	41		E 8	25	N				TB21- 15	16	N		107	
B 42	41		E 8	25	N				TB21- 12	16	N		107	
B 43	41		E 8	25	N				TB21- 9	16	N		107	
B 44	41		E 8	25	N				TB21- 6	16	N		107	
B 45	41		E 8	25	N				TB21- 3	16	N		107	
B 46	41		TB22- 1	16	N		107		E 2	25	N			
B 47	41		E 2	25	N				TB22- 3	16	N		107	
B 48	41		E 2	25	N				TB22- 6	16	N		107	
B 49	41		E 2	25	N				TB22- 9	16	N		107	
B 50	41		E 2	25	N				TB22- 12	16	N		107	
B 51	41		E 2	25	N				TB22- 15	16	N		107	
B 52	41		E 2	25	N				TB22- 18	16	N		107	
B 53	41		E 2	25	N				TB22- 21	16	N		107	
B 54	41		E 2	25	N				TB22- 24	16	N		107	
B 55	41		E 9	25	N				TB20- 1	16	N		107	

1 THE STD CONDUCTOR TERMINATION FIGURES ARE PER
2 DIMENSIONS ARE IN INCHES AND TWO PLACE DECIMALS.

MANNED SPACECRAFT CENTER HOUSTON, TEXAS | SIZE A | 1900943

SCALE - NONE | REV LTR AR | SHEET 19 OF 188

MIL 2089 - 4-65 WIR

CONDUCTOR NUMBER	ITEM NO.	INDIVIDUAL LENGTH (2)	FROM CUT WIRE OR SHIELD STRIP WIRE OR JACKET CIRCUIT POINT (2)	TYPE (2)	TERMINATION SPEC. (1)	ITEM NO.	NO.	TO CUT WIRE OR SHIELD STRIP WIRE OR JACKET CIRCUIT POINT (2)	TYPE (2)	TERMINATION SPEC. (1)	ITEM NO.	NO.
B 56	41		E 9	25N				TB20- 3	16N	107		
B 57	41		E 9	25N				TB20- 6	16N	107		
B 58	41		TB 9- 7	16N	111			TB20- 9	16N	107		
B 59	41		E 9	25N				TB20- 12	16N	107		
B 60	41		E 9	25N				TB20- 15	16N	107		
B 61	41		E 9	25N				TB20- 18	16N	107		
B 62	41		E 9	25N				TB20- 21	16N	107		
B 63	41		E 17	25N				TB18- 15	16N	107		
B 64	41		E 17	25N				TB18- 18	16N	107		
B 65	41		E 17	25N				TB18- 21	16N	107		
B 66	41		E 17	25N				TB18- 24	16N	107		
B 67	41		E 17	25N				TB18- 27	16N	107		
B 68	41		E 17	25N				TB18- 30	16N	107		
B 69	41		E 17	25N				TB18- 33	16N	107		
B 70	41		E 17	25N				TB18- 36	16N	107		
B 71	41		E 17	25N				TB18- 39	16N	107		
B 72	44			225	200 83				300	270 51 55 836		
B 72B	41		E 52	25N				SHLD B 72	25N			

1> THE STD CONDUCTOR TERMINATION FIGURES ARE PER
2> DIMENSIONS ARE IN INCHES AND TWO PLACE DECIMALS.

MANNED SPACECRAFT CENTER HOUSTON, TEXAS | SIZE A | 1900943
SCALE - NONE | REV LTR AR | SHEET 20 OF 188

MIL 2049 - 4-63 WIR

CONDUCTOR NUMBER	ITEM NO.	INDIVIDUAL LENGTH (2)	FROM CUT WIRE OR SHIELD STRIP WIRE OR JACKET CIRCUIT POINT (2)	TYPE (2)	TERMINATION SPEC. (1)	ITEM NO.	NO.	TO CUT WIRE OR SHIELD STRIP WIRE OR JACKET CIRCUIT POINT (2)	TYPE (2)	TERMINATION SPEC. (1)	ITEM NO.	NO.
B 72L			P22-S	25N				TB 5- 7	20N		111	
B 72R			P22-R	25N				TB 4- 9	20N		111	
B 73	41		TB23- 21	20N	111			E 22	25N			
B 75	44			225	200 83	7			300	270 51 55 836		
B 75B	41		E 49	25N				SHLD B 75	25N			
B 75L			P 4-E	25N				TB 2- 1	20N		111	
B 75R			P 4-D	25N				TB 1- 1	20N		111	
B 76	44			225	200 83	7			300	270 51 55 836		
B 76B	41		E 45	25N				SHLD B 76	25N			
B 76L			P 2-E	25N				TB 6- 4	20N		111	
B 76R			P 2-D	25N				TB 6- 1	20N		111	
B 77	40		P64-S	25N	157			TB 7- 1	20N		111	
B 78	40		P64-T	25N	157			TB 7- 5	20N		111	
B 79	41		E 15	25N				TB19- 36	16N		107	
B 80	41		E 15	25N				TB19- 33	16N		107	
B 81	41		E 15	25N				TB19- 30	16N		107	
B 82	41		E 15	25N				TB19- 27	16N		107	
B 83	41		E 15	25N				TB19- 24	16N		107	

1> THE STD CONDUCTOR TERMINATION FIGURES ARE PER
2> DIMENSIONS ARE IN INCHES AND TWO PLACE DECIMALS.

MANNED SPACECRAFT CENTER HOUSTON, TEXAS | SIZE A | 1900943
SCALE - NONE | REV LTR AR | SHEET 21 OF 188

MIL 2049 - 4-63 WIR

CONDUCTOR NUMBER	ITEM NO.	INDIVIDUAL LENGTH (2)	FROM CUT WIRE OR SHIELD STRIP WIRE OR JACKET CIRCUIT POINT (2)	TYPE (2)	TERMINATION SPEC. (1)	ITEM NO.	NO.	TO CUT WIRE OR SHIELD STRIP WIRE OR JACKET CIRCUIT POINT (2)	TYPE (2)	TERMINATION SPEC. (1)	ITEM NO.	NO.
B 84	41		E 15	25N				TB19- 21	16N	107		
B 85	41		E 15	25N				TB19- 18	16N	107		
B 86	41		E 15	25N				TB19- 15	16N	107		
B 87	41		E 15	25N				TB19- 12	16N	107		
B 88	65			225	200 86 87 856				52	23 90 91 7		
B 88A	41		SHLD B 88	25N				TB17- 15CD	16N	107		
B 88E			TB17- 15AB	16N	107			P61-F1	11N	89		
B 88X			SHLD B 88					P61-F2				
B 89	65			225	200 86 87 856				52	23 90 91 7		
B 89A	41		SHLD B 89	25N				TB17- 14CD	16N	107		
B 89E			TB17- 14AB	16N	107			P60-A1	11N	89		
B 89X			SHLD B 89					P60-A2				
B 90	65			225	200 86 87 856				52	23 90 91 7		
B 90A	41		SHLD B 90	25N				TB17- 13CD	16N	107		
B 90E			TB17- 13AB	16N	107			P60-B1	11N	89		
B 90X			SHLD B 90					P60-B2				
B 91	65			225	200 86 87 856				52	23 90 91 7		
B 91A	41		SHLD B 91	25N				TB17- 12CD	16N	107		

1> THE STD CONDUCTOR TERMINATION FIGURES ARE PER
2> DIMENSIONS ARE IN INCHES AND TWO PLACE DECIMALS.

MANNED SPACECRAFT CENTER HOUSTON, TEXAS | SIZE A | 1900943
SCALE - NONE | REV LTR AR | SHEET 22 OF 188

MIL 2049 - 4-63 WIR

CONDUCTOR NUMBER	ITEM NO.	INDIVIDUAL LENGTH (2)	FROM CUT WIRE OR SHIELD STRIP WIRE OR JACKET CIRCUIT POINT (2)	TYPE (2)	TERMINATION SPEC. (1)	ITEM NO.	NO.	TO CUT WIRE OR SHIELD STRIP WIRE OR JACKET CIRCUIT POINT (2)	TYPE (2)	TERMINATION SPEC. (1)	ITEM NO.	NO.
B 91E			TB17- 12AB	16N	107			P60-C1	11N		89	
B 91X			SHLD B 91					P60-C2				
B 94	65			52	23 90 91 7				225	200 86 87 856		
B 94B	41		TB17- 17CD	16N	107			SHLD B 94	25N			
B 94E			P60-F1	11N	89			TB17- 17AB	16N		107	
B 94X			P60-F2					SHLD B 94				
B 95	42		P36-M	25N				P34-J*	25N			
B 96	42		P36-J	25N				P98-JJ	25N			
B 97	42		P36-K	25N				P34-K*	25N			
B 98	42		P36-P	25N				P98-L	25N			
B 99	42		P36-S	25N				TB19- 3AB	16N		107	
B 100	42		P36-U	25N				P98-V*	25N			
B 101	42		P36-W	25N				P34-H*	25N			
B 102	42		P36-X	25N				P98-W	25N			
B 103	45			225	200 84 7				225	200 50 54 845		
B 103B	41		E 39	25N				SHLD B 103	25N			
B 103L			P21-Y	25N				P23-E	25N			
B 103R			P21-X	25N				P23-D	25N			

1> THE STD CONDUCTOR TERMINATION FIGURES ARE PER
2> DIMENSIONS ARE IN INCHES AND TWO PLACE DECIMALS.

MANNED SPACECRAFT CENTER HOUSTON, TEXAS | SIZE A | 1900943
SCALE - NONE | REV LTR AR | SHEET 23 OF 188

MIL 2049 - 4-63 WIR

CONDUCTOR NUMBER	INDIVIDUAL LENGTH ITEM NO.	2	FROM CUT WIRE OR SHIELD STRIP WIRE OR JACKET CIRCUIT POINT	2	T I N	2	TERMINATION SPEC. 1 ITEM NO.	NO.	TO CUT WIRE OR SHIELD STRIP WIRE OR JACKET CIRCUIT POINT	2	T I N	2	TERMINATION SPEC 1 ITEM NO.	NO.
B 104	45			225		200	84	7		225		200	50 54 845	
B 104B	41		E 39	25N					SHLD B 104	25N				
B 104L			P21-A*	25N					P23-C	25N				
B 104R			P21-Z	25N					P23-B	25N				
B 105	41		E 8	25N					TB21- 1	16N			107	
B 106	41		E 10	25N					TB20- 24	16N			107	
B 107	41		E 10	25N					TB20- 27	16N			107	
B 108	41		E 10	25N					TB20- 30	16N			107	
B 109	41		E 10	25N					TB20- 33	16N			107	
B 110	41		E 10	25N					TB20- 36	16N			107	
B 111	41		E 10	25N					TB20- 39	16N			107	
B 112	41		E 10	25N					TB20- 49	16N			107	
B 113	41		E 10	25N					TB20- 52	16N			107	
B 114	41		E 10	25N					TB20- 55	16N			107	
B 115	45			225		200	84	7		300		270	50 54 845	
B 115B	41		E 53	25N					SHLD B 115	25N				
B 115L			P21-C*	25N					TB 5- 10	20N			111	
B 115R			P21-B*	25N					TB 5- 5	20N			111	

1 THE STD CONDUCTOR TERMINATION FIGURES ARE PER
2 DIMENSIONS ARE IN INCHES AND TWO PLACE DECIMALS.

MANNED SPACECRAFT CENTER HOUSTON, TEXAS | SIZE A | 1900943
SCALE - NONE | REV LTR AR | SHEET 24 OF 188

MIL-2085 - 4-65 WIR

CONDUCTOR NUMBER	INDIVIDUAL LENGTH ITEM NO.	2	FROM CUT WIRE OR SHIELD STRIP WIRE OR JACKET CIRCUIT POINT	2	T I N	2	TERMINATION SPEC. 1 ITEM NO.	NO.	TO CUT WIRE OR SHIELD STRIP WIRE OR JACKET CIRCUIT POINT	2	T I N	2	TERMINATION SPEC 1 ITEM NO.	NO.
B 116	45			225		200	84	7		300		270	50 54 845	
B 116B	41		E 53	25N					SHLD B 116	25N				
B 116L			P21-E*	25N					TB 5- 10	20N			111	
B 116R			P21-D*	25N					TB 5- 4	20N			111	
B 117	45			225		200	84	7		300		270	84	7
B 117B	41		E 52	25N					SHLD B 117	25N				
B 117L			P22-P	25N					TB 5- 6	20N			111	
B 117R			P22-N	25N					TB 3- 9	20N			111	
B 118	40		P36-T	25N			157		TB 7- 3	20N			111	
B 119	42		P31-MM	25N					P99-C*	25N				
B 120	42		P31-NN	25N					P99-H*	25N				
B 121	42		P31-V*	25N					P99-D*	25N				
B 122	42		P31-W*	25N					P99-J*	25N				
B 123	42		P31-HH	25N					P99-E*	25N				
B 124	42		P31-JJ	25N					P99-I*	25N				
B 125	42		P31-BB	25N					P98-K	25N				
B 126	42		P31-X*	25N					P99-DD	25N				
B 127			DELETE											

1 THE STD CONDUCTOR TERMINATION FIGURES ARE PER
2 DIMENSIONS ARE IN INCHES AND TWO PLACE DECIMALS.

MANNED SPACECRAFT CENTER HOUSTON, TEXAS | SIZE A | 1900943
SCALE - NONE | REV LTR AR | SHEET 25 OF 188

MIL-2085 - 4-65 WIR

CONDUCTOR NUMBER	INDIVIDUAL LENGTH ITEM NO.	2	FROM CUT WIRE OR SHIELD STRIP WIRE OR JACKET CIRCUIT POINT	2	T I N	2	TERMINATION SPEC. 1 ITEM NO.	NO.	TO CUT WIRE OR SHIELD STRIP WIRE OR JACKET CIRCUIT POINT	2	T I N	2	TERMINATION SPEC 1 ITEM NO.	NO.
B 128	42		P31-O*	25N					P98-B	25N				
B 129	42		P31-D	25N					P98-A	25N				
B 130	42		P31-J*	25N					P34-W*	25N				
B 131	42		P31-H*	25N					P34-P*	25N				
B 132	42		P31-G*	25N					P34-T*	25N				
B 133	42		P31-A	25N					P98-E*	25N				
B 134	42		P31-B*	25N					P98-F*	25N				
B 135	42		P31-A*	25N					P34-R*	25N				
B 136	42		P31-Z	25N					P34-U*	25N				
B 137	42		P31-Y	25N					P98-D*	25N				
B 138	42		P31-J	25N					P34-X*	25N				
B 139	42		P31-T	25N					P98-M	25N				
B 140	42		P31-S	25N					P98-Y	25N				
B 141	42		P31-L	25N					P98-X	25N				
B 142	41		P31-B	25N					P98-Z	25N				
B 143	42		P31-W	25N					P98-B*	25N				
B 144	42		P31-V	25N					P98-A*	25N				
B 145	42		P31-F	25N					P31-LL	25N				

1 THE STD CONDUCTOR TERMINATION FIGURES ARE PER
2 DIMENSIONS ARE IN INCHES AND TWO PLACE DECIMALS.

MANNED SPACECRAFT CENTER HOUSTON, TEXAS | SIZE A | 1900943
SCALE - NONE | REV LTR AR | SHEET 26 OF 188

MIL-2085 - 4-65 WIR

CONDUCTOR NUMBER	INDIVIDUAL LENGTH ITEM NO.	2	FROM CUT WIRE OR SHIELD STRIP WIRE OR JACKET CIRCUIT POINT	2	T I N	2	TERMINATION SPEC. 1 ITEM NO.	NO.	TO CUT WIRE OR SHIELD STRIP WIRE OR JACKET CIRCUIT POINT	2	T I N	2	TERMINATION SPEC 1 ITEM NO.	NO.
B 147	42		P92-P	25N					P98-C	25N				
B 148	42		P96-U	25N					P34-F	25N				
B 149	42		P96-W	25N					P99-BB	25N				
B 150	42		P92-W	25N					P99-K*	25N				
B 152	41		E 63	20N			111		E 19	25N				
B 153	41		E 63	20N			111		E 20	25N				
B 156	40		P 5-V*	25N			166		TB14- 9	20N			111	
B 157	40		P 5-BB	25N			166		TB14- 7	20N			111	
B 158	44			225		200	83	7		300		270	51 55 836	
B 158B	41		E 47	25N					SHLD B 158	25N				
B 158L			P 8-E	25N					TB14- 4	20N			111	
B 158R			P 8-D	25N					TB14- 2	20N			111	
B 159	65			225		200	86 87 856			32		23	90 91	7
B 159A	41		SHLD B 159	25N					TB17- 29CD	16N			107	
B 159E			TB17- 29AB	16N			107		P62-F1	11N			89	
B 159X			SHLD B 159						P62-F2					
B 160	65			225		200	86 87 856			32		23	90 91	7
B 160A	41		SHLD B 160	25N					TB17- 28CD	16N			107	

1 THE STD CONDUCTOR TERMINATION FIGURES ARE PER
2 DIMENSIONS ARE IN INCHES AND TWO PLACE DECIMALS.

MANNED SPACECRAFT CENTER HOUSTON, TEXAS | SIZE A | 1900943
SCALE - NONE | REV LTR AR | SHEET 27 OF 188

MIL-2085 - 4-65 WIR

CONDUCTOR INDIVIDUAL LENGTH NUMBER	ITEM NO.	2	FROM CUT WIRE OR SHIELD STRIP WIRE OR JACKET CIRCUIT POINT	2	TIN	2	TERMINATION SPEC. ITEM NO.	1	NO.	TO CUT WIRE OR SHIELD STRIP WIRE OR JACKET CIRCUIT POINT	2	TIN	2	TERMINATION SPEC. ITEM NO.	1	NO.
B 160E			TB17- 28AB		16N		107			P61-A1		11N		89		
B 160X			SHLD B 160							P61-A2						
B 161	65			225		200	86 87 856				52		23 90 91		7	
B 161A	41		SHLD B 161		25N					TB17- 27CD		16N		107		
B 161E			TB17- 27AB		16N		107			P61-B1		11N		89		
B 161X			SHLD B 161							P61-B2						
B 162	65			225		200	86 87 856				52		23 90 91		7	
B 162A	41		SHLD B 162		25N					TB17- 26CD		16N		107		
B 162E			TB17- 26AB		16N		107			P61-C1		11N		89		
B 162X			SHLD B 162							P61-C2						
B 163	65			225		200	86 87 856				52		23 90 91		7	
B 163A	41		SHLD B 163		25N					TB17- 25CD		16N		107		
B 163E			TB17- 25AB		16N		107			P61-D1		11N		89		
B 163X			SHLD B 163							P61-D2						
B 164	65			225		200	86 87 856				52		23 90 91		7	
B 164A	41		SHLD B 164		25N					TB17- 4CD		16N		107		
B 164E			TB17- 4AB		16N		107			P61-E1		11N		89		
B 164X			SHLD B 164							P61-E2						

1 THE STD CONDUCTOR TERMINATION FIGURES ARE PER
2 DIMENSIONS ARE IN INCHES AND TWO PLACE DECIMALS.

MANNED SPACECRAFT CENTER HOUSTON, TEXAS | SIZE A | 1900943
SCALE - NONE | REV LTR AR | SHEET 28 OF 188

MIL 2089 - 4-63 WIR

CONDUCTOR INDIVIDUAL LENGTH NUMBER	ITEM NO.	2	FROM CUT WIRE OR SHIELD STRIP WIRE OR JACKET CIRCUIT POINT	2	TIN	2	TERMINATION SPEC. ITEM NO.	1	NO.	TO CUT WIRE OR SHIELD STRIP WIRE OR JACKET CIRCUIT POINT	2	TIN	2	TERMINATION SPEC. ITEM NO.	1	NO.
B 165	65			225		200	86 87 856				52		23 90 91		7	
B 165A			DELETED													
B 165E			TB17- 21AB		16N		107			P61-J1		11N		89		
B 165X			SHLD B 165							P61-J2						
B 166	65			225		200	86 87 856				52		23 90 91		7	
B 166A			DELETED													
B 166E			TB17- 23AB		16N		107			P60-G1		11N		89		
B 166X			SHLD B 166							P60-G2						
B 167	65			225		200	86 87 856				52		23 90 91		7	
B 167A			DELETED													
B 167E			TB17- 22AB		16N		107			P60-H1		11N		89		
B 167X			SHLD B 167							P60-H2						
B 168	65			52		23 90 91		7			225		200 86 87 856			
B 168B	41		TB27- 23CD		16N		107			SHLD B 168		25N				
B 168E			P62-G1		11N		89			TB27- 23AB		16N		107		
B 168X			P62-G2							SHLD B 168						
B 169	44			225		200	83	7			300		270 51 55 836			
B 169B	41		E 45		25N					SHLD B 169		25N				

1 THE STD CONDUCTOR TERMINATION FIGURES ARE PER
2 DIMENSIONS ARE IN INCHES AND TWO PLACE DECIMALS.

MANNED SPACECRAFT CENTER HOUSTON, TEXAS | SIZE A | 1900943
SCALE - NONE | REV LTR AR | SHEET 29 OF 188

MIL 2089 - 4-63 WIR

CONDUCTOR INDIVIDUAL LENGTH NUMBER	ITEM NO.	2	FROM CUT WIRE OR SHIELD STRIP WIRE OR JACKET CIRCUIT POINT	2	TIN	2	TERMINATION SPEC. ITEM NO.	1	NO.	TO CUT WIRE OR SHIELD STRIP WIRE OR JACKET CIRCUIT POINT	2	TIN	2	TERMINATION SPEC. ITEM NO.	1	NO.
B 169L			P59-E		25N					TB 6- 5		20N		111		
B 169R			P59-D		25N					TB 6- 2		20N		111		
B 170	40		P37-GG		25N		157			TB 1- 10		20N		111		
B 171	42		P24-Q*		25N					P37-E*		25N				
B 172	42		P24-R*		25N					P11-M*		25N				
B 173	41		E 3		25N					TB22- 27		16N		107		
B 174	41		E 3		25N					TB22- 30		16N		107		
B 175	41		E 3		25N					TB22- 33		16N		107		
B 176	41		E 3		25N					TB22- 36		16N		107		
B 177	41		E 3		25N					TB22- 39		16N		107		
B 178	41		E 3		25N					TB22- 49		16N		107		
B 179	41		E 3		25N					TB22- 52		16N		107		
B 180	41		E 3		25N					TB22- 55		16N		107		
B 181	41		E 3		25N					TB22- 58		16N		107		
B 182	41		P99-S		25N					TB 8- 1		20N		111		
B 183	42		P24-L		25N					P11-J*		25N				
B 184	42		P24-N*		25N					P11-H*		25N				
B 185	42		P24-P*		25N					P11-K*		25N				

1 THE STD CONDUCTOR TERMINATION FIGURES ARE PER
2 DIMENSIONS ARE IN INCHES AND TWO PLACE DECIMALS.

MANNED SPACECRAFT CENTER HOUSTON, TEXAS | SIZE A | 1900943
SCALE - NONE | REV LTR AR | SHEET 30 OF 188

MIL 2089 - 4-63 WIR

CONDUCTOR INDIVIDUAL LENGTH NUMBER	ITEM NO.	2	FROM CUT WIRE OR SHIELD STRIP WIRE OR JACKET CIRCUIT POINT	2	TIN	2	TERMINATION SPEC. ITEM NO.	1	NO.	TO CUT WIRE OR SHIELD STRIP WIRE OR JACKET CIRCUIT POINT	2	TIN	2	TERMINATION SPEC. ITEM NO.	1	NO.
B 186	42		P24-S*		25N					P11-N*		25N				
B 187	42		P24-M*		25N					P11-I*		25N				
B 188	41		E 62		20N					E 14		25N				
B 190	41		E 7		25N					TB21- 61		16N		107		
B 191	41		E 7		25N					TB21- 58		16N		107		
B 192	41		E 7		25N					TB21- 55		16N		107		
B 193	41		E 7		25N					TB21- 52		16N		107		
B 194	41		E 7		25N					TB21- 49		16N		107		
B 195	41		E 7		25N					TB21- 39		16N		107		
B 196	41		E 7		25N					TB21- 36		16N		107		
B 197	41		E 7		25N					TB21- 33		16N		107		
B 198	41		E 7		25N					TB21- 30		16N		107		
B 199	65			225		200	86 87 856				50		31		7	
B 199A	41		SHLD B 199		25N					P65-H*		25N				
B 199E			P65-H		25N					P53-H		11N				
B 199X			SHLD B 199							P53-L						
B 200	65			225		200	86 87 856				50		31		7	
B 200A			DELETE													

1 THE STD CONDUCTOR TERMINATION FIGURES ARE PER
2 DIMENSIONS ARE IN INCHES AND TWO PLACE DECIMALS.

MANNED SPACECRAFT CENTER HOUSTON, TEXAS | SIZE A | 1900943
SCALE - NONE | REV LTR AR | SHEET 31 OF 188

MIL 2089 - 4-63 WIR

CONDUCTOR INDIVIDUAL LENGTH NUMBER	ITEM NO. (2)	FROM CUT WIRE OR SHIELD STRIP WIRE OR JACKET CIRCUIT POINT (2)	T I N (2)	TERMINATION SPEC. (1) ITEM NO.	NO.	TO CUT WIRE OR SHIELD STRIP WIRE OR JACKET CIRCUIT POINT (2)	T I N (2)	TERMINATION SPEC. (1) ITEM NO.	NO.
B 200E		P65-J	25N			P51-H	11N		
B 200X		SHLD B 200				P51-L			
B 201	65		22S	200 86 87 856			52	23 90 91 7	
B 201A	41	SHLD B 201	25N			TB17- 39CD	16N	107	
B 201E		TB17- 39AB	16N	107		P61-G1	11N	89	
B 201X		SHLD B 201				P61-G2			
B 202	65		22S	200 86 87 856			52	23 90 91 7	
B 202A	41	SHLD B 202	25N			TB17- 38CD	16N	107	
B 202E		TB17- 38AB	16N	107		P61-H1	11N	89	
B 202X		SHLD B 202				P61-H2			
B 203	65		22S	200 86 87 856			52	23 90 91 7	
B 203A	41	SHLD B 203	25N			TB17- 31CD	16N	107	
B 203E		TB17- 31AB	16N	107		P60-J1	11N	89	
B 203X		SHLD B 203				P60-J2			
B 204	65		22S	200 86 87 856			52	23 90 91 7	
B 204A	41	SHLD B 204	25N			TB17- 30CD	16N	107	
B 204E		TB17- 30AB	16N	107		P62-E1	11N	89	
B 204X		SHLD B 204				P62-E2			

(1) THE STD CONDUCTOR TERMINATION FIGURES ARE PER
(2) DIMENSIONS ARE IN INCHES AND TWO PLACE DECIMALS.

MANNED SPACECRAFT CENTER HOUSTON, TEXAS | SIZE A | 1900943
SCALE - NONE | REV LTR AR | SHEET 32 OF 188

MIL 2088 - 4-65 WIR

CONDUCTOR INDIVIDUAL LENGTH NUMBER	ITEM NO. (2)	FROM CUT WIRE OR SHIELD STRIP WIRE OR JACKET CIRCUIT POINT (2)	T I N (2)	TERMINATION SPEC. (1) ITEM NO.	NO.	TO CUT WIRE OR SHIELD STRIP WIRE OR JACKET CIRCUIT POINT (2)	T I N (2)	TERMINATION SPEC. (1) ITEM NO.	NO.
B 205	45		225	200 84	7		300	270 50 54 846	
B 205B	41	E 50	25N			SHLD B 205	25N		
B 205L		P24-HH	25N			TB 2- 1	20N	111	
B 205R		P24-GG	25N			TB 2- 4	20N	111	
B 206	44		225	200 84	7		225	200 50 54 84 5	
B 206B	41	E 55	25N			SHLD B 206	25N		
B 206L		P33-E	25N	157		TB 7- 4	20N	111	
B 206R		P33-D	25N	157		TB 7- 1	20N	111	
B 207	41	P82-S*	25N			TB12- 7	20N	111	
B 208	41	P82-T*	25N			TB12- 9	20N	111	
B 209	02			120				120	
B 209L		P22-K	25N	157		TB 3- 7	20N	111	
B 209R		P22-J	25N	157		TB 3- 5	20N	111	
B 210	41	E 13	25N			TB19- 94	16N	107	
B 211	41	E 13	25N			TB19- 91	16N	107	
B 212	41	E 13	25N			TB19- 88	16N	107	
B 213	41	E 13	25N			TB19- 85	16N	107	
B 214	41	E 13	25N			TB19- 82	16N	107	

(1) THE STD CONDUCTOR TERMINATION FIGURES ARE PER
(2) DIMENSIONS ARE IN INCHES AND TWO PLACE DECIMALS.

MANNED SPACECRAFT CENTER HOUSTON, TEXAS | SIZE A | 1900943
SCALE - NONE | REV LTR AR | SHEET 33 OF 188

MIL 2088 - 4-65 WIR

CONDUCTOR INDIVIDUAL LENGTH NUMBER	ITEM NO. (2)	FROM CUT WIRE OR SHIELD STRIP WIRE OR JACKET CIRCUIT POINT (2)	T I N (2)	TERMINATION SPEC. (1) ITEM NO.	NO.	TO CUT WIRE OR SHIELD STRIP WIRE OR JACKET CIRCUIT POINT (2)	T I N (2)	TERMINATION SPEC. (1) ITEM NO.	NO.
B 215	41	E 13	25N			TB19- 80	16N	107	
B 216	41	E 13	25N			TB19- 78	16N	107	
B 217	41	E 13	25N			TB19- 75	16N	107	
B 218	41	E 13	25N			TB19- 72	16N	107	
B 219	41	P91-Z	25N			TB23- 13	20N	111	
B 220	41	E 11	25N			TB20- 58	16N	107	
B 221	41	E 11	25N			TB20- 61	16N	107	
B 222	41	E 11	25N			TB20- 64	16N	107	
B 223	41	E 11	25N			TB20- 67	16N	107	
B 224	41	E 11	25N			TB20- 69	16N	107	
B 225	41	E 11	25N			TB20- 72	16N	107	
B 226	41	E 11	25N			TB20- 75	16N	107	
B 227	41	E 11	25N			TB20- 77	16N	107	
B 228	41	E 11	25N			TB20- 80	16N	107	
B 229	65		22S	200 86 87 856			52	23 90 91 7	
B 229A	41	SHLD B 229	25N			TB17- 43CD	16N	107	
B 229E		TB17- 43AB	16N	107		P62-K1	11N	89	
B 229X		SHLD B 229				P62-K2			

(1) THE STD CONDUCTOR TERMINATION FIGURES ARE PER
(2) DIMENSIONS ARE IN INCHES AND TWO PLACE DECIMALS.

MANNED SPACECRAFT CENTER HOUSTON, TEXAS | SIZE A | 1900943
SCALE - NONE | REV LTR AR | SHEET 34 OF 188

MIL 2088 - 4-65 WIR

CONDUCTOR INDIVIDUAL LENGTH NUMBER	ITEM NO. (2)	FROM CUT WIRE OR SHIELD STRIP WIRE OR JACKET CIRCUIT POINT (2)	T I N (2)	TERMINATION SPEC. (1) ITEM NO.	NO.	TO CUT WIRE OR SHIELD STRIP WIRE OR JACKET CIRCUIT POINT (2)	T I N (2)	TERMINATION SPEC. (1) ITEM NO.	NO.
B 230	65		225	200 86 87 856			52	23 90 91 7	
B 230A	41	SHLD B 230	25N			TB17- 42CD	16N	107	
B 230E		TB17- 42AB	16N	107		P62-B1	11N	89	
B 230X		SHLD B 230				P62-B2			
B 231	65		225	200 86 87 856			52	23 90 91 7	
B 231A	41	SHLD B 231	25N			TB17- 41CD	16N	107	
B 231E		TB17- 41AB	16N	107		P62-C1	11N	89	
B 231X		SHLD B 231				P62-C2			
B 232	65		225	200 86 87 856			52	23 90 91 7	
B 232A	41	SHLD B 232	25N			TB17- 40CD	16N	107	
B 232E		TB17- 40AB	16N	107		P62-D1	11N	89	
B 232X		SHLD B 232				P62-D2			
B 233	41	E 62	20N	111		E 12	25N		
B 234	41	E 63	20N	111		E 13	25N		
B 237	41	E 19	25N			TB18- 75	16N	107	
B 238	41	E 19	25N			TB18- 78	16N	107	
B 239	41	E 19	25N			TB18- 81	16N	107	
B 240	41	E 19	25N			TB18- 84	16N	107	

(1) THE STD CONDUCTOR TERMINATION FIGURES ARE PER
(2) DIMENSIONS ARE IN INCHES AND TWO PLACE DECIMALS.

MANNED SPACECRAFT CENTER HOUSTON, TEXAS | SIZE A | 1900943
SCALE - NONE | REV LTR AR | SHEET 35 OF 188

MIL 2088 - 4-65 WIR

CONDUCTOR INDIVIDUAL LENGTH NUMBER	ITEM NO.	2	FROM CUT WIRE OR SHIELD STRIP WIRE OR JACKET CIRCUIT POINT	2	TIN	2	TERMINATION SPEC. 1 ITEM NO.	NO.	TO CUT WIRE OR SHIELD STRIP WIRE OR JACKET CIRCUIT POINT	2	TIN	2	TERMINATION SPEC 1 ITEM NO.	NO.
B 241	41		E 19	25	N				TB18- 87	16	N		107	
B 242	41		E 19	25	N				TB18- 90	16	N		107	
B 243	41		E 19	25	N				TB18- 93	16	N		107	
B 244	41		E 19	25	N				TB18- 96	16	N		107	
B 245	41		E 19	25	N				TB18- 99	16	N		107	
B 246	41		E 4	25	N				TB22- 61	16	N		107	
B 247	41		E 4	25	N				TB22- 64	16	N		107	
B 248	41		E 4	25	N				TB22- 67	16	N		107	
B 249	41		E 4	25	N				TB22- 69	16	N		107	
B 250	41		E 4	25	N				TB22- 72	16	N		107	
B 251	41		E 4	25	N				TB22- 77	16	N		107	
B 252	41		E 4	25	N				TB22- 74	16	N		107	
B 253	41		E 4	25	N				TB22- 82	16	N		107	
B 254	41		E 4	25	N				TB22- 85	16	N		107	
B 255			DELETE											
B 256	42		P31-P*	25	N				P36-L	25	N			
B 257	42		P31-GG	25	N				P36-V	25	N			
B 258	46			225		200	48 52 845			225		200	85	

1 THE STD CONDUCTOR TERMINATION FIGURES ARE PER
2 DIMENSIONS ARE IN INCHES AND TWO PLACE DECIMALS.

MANNED SPACECRAFT CENTER HOUSTON, TEXAS | SIZE A | 1900943
SCALE - NONE | REV LTR AR | SHEET 36 OF 188

MIL 2089 - 4-65 WIR

CONDUCTOR INDIVIDUAL LENGTH NUMBER	ITEM NO.	2	FROM CUT WIRE OR SHIELD STRIP WIRE OR JACKET CIRCUIT POINT	2	TIN	2	TERMINATION SPEC. 1 ITEM NO.	NO.	TO CUT WIRE OR SHIELD STRIP WIRE OR JACKET CIRCUIT POINT	2	TIN	2	TERMINATION SPEC 1 ITEM NO.	NO.
B 258A	41		SHLD B 258	25	N				E 34	25	N			
B 258L			P32-P	25	N				P36-V*	25	N			
B 258R			P32-R	25	N				P36-S*	25	N			
B 259	46			225		200	48 52 845			225		200	85	
B 259A	41		SHLD B 259	25	N				E 35	25	N			
B 259L			P32-DD	25	N				P36-U*	25	N			
B 259R			P32-EE	25	N				P36-R*	25	N			
B 260	46			225		200	48 52 845			225		200	85	
B 260A	41		SHLD B 260	25	N				E 34	25	N			
B 260L			P32-V*	25	N				P36-T*	25	N			
B 260R			P32-U*	25	N				P36-P*	25	N			
B 261	46			225		200	48 52 845			225		200	85	7
B 261A	41		SHLD B 261	25	N				E 34	25	N			
B 261L			P32-K	25	N				P35-K	25	N			
B 261R			P32-L	25	N				P35-L	25	N			
B 263	41		E 21	25	N				TB17- 74	16	N		107	
B 264	41		E 21	25	N				TB17- 71	16	N		107	
B 265	41		E 21	25	N				TB17- 68	16	N		107	

1 THE STD CONDUCTOR TERMINATION FIGURES ARE PER
2 DIMENSIONS ARE IN INCHES AND TWO PLACE DECIMALS.

MANNED SPACECRAFT CENTER HOUSTON, TEXAS | SIZE A | 1900943
SCALE - NONE | REV LTR AR | SHEET 37 OF 188

MIL 2089 - 4-65 WIR

CONDUCTOR INDIVIDUAL LENGTH NUMBER	ITEM NO.	2	FROM CUT WIRE OR SHIELD STRIP WIRE OR JACKET CIRCUIT POIN	2	TIN	2	TERMINATION SPEC. 1 ITEM NO.	NO.	TO CUT WIRE OR SHIELD STRIP WIRE OR JACKET CIRCUIT POINT	2	TIN	2	TERMINATION SPEC 1 ITEM NO.	NO.
B 266	41		E 21	25	N				TB17- 65	16	N		107	
B 267	41		E 21	25	N				TB17- 62	16	N		107	
B 268	41		E 21	25	N				TB17- 59	16	N		107	
B 269	41		E 21	25	N				TB17- 56	16	N		107	
B 270	41		E 21	25	N				TB17- 53	16	N		107	
B 271	41		E 21	25	N				TB17- 50	16	N		107	
B 272	42		P31-FF	25	N				P96-Z	25	N			
B 273	42		P31-F*	25	N				P92-I*	25	N			
B 274	42		P31-E*	25	N				P92-H*	25	N			
B 275	42		P31-D*	25	N				P92-G*	25	N			
B 276	42		P31-DD	25	N				P92-D*	25	N			
B 277	42		P31-KK	25	N				P92-E*	25	N			
B 278	42		P31-E	25	N				P92-C*	25	N			
B 279	42		P31-PP	25	N				P92-J*	25	N			
B 280	41		E 6	25	N				TB21- 88	16	N		107	
B 281	41		E 6	25	N				TB21- 84	16	N		107	
B 282	41		E 6	25	N				TB21- 81	16	N		107	
B 283	41		E 6	25	N				TB21- 78	16	N		107	

1 THE STD CONDUCTOR TERMINATION FIGURES ARE PER
2 DIMENSIONS ARE IN INCHES AND TWO PLACE DECIMALS.

MANNED SPACECRAFT CENTER HOUSTON, TEXAS | SIZE A | 1900943
SCALE - NONE | REV LTR AR | SHEET 38 OF 188

MIL 2089 - 4-65 WIR

CONDUCTOR INDIVIDUAL LENGTH NUMBER	ITEM NO.	2	FROM CUT WIRE OR SHIELD STRIP WIRE OR JACKET CIRCUIT POINT	2	TIN	2	TERMINATION SPEC. 1 ITEM NO.	NO.	TO CUT WIRE OR SHIELD STRIP WIRE OR JACKET CIRCUIT POINT	2	TIN	2	TERMINATION SPEC 1 ITEM NO.	NO.
B 284	41		E 6	25	N				TB21- 76	16	N		107	
B 285	41		E 6	25	N				TB21- 73	16	N		107	
B 286	41		E 6	25	N				TB21- 70	16	N		107	
B 287	41		E 6	25	N				TB21- 67	16	N		107	
B 288	41		E 6	25	N				TB21- 64	16	N		107	
B 289	41		E 62	20	N		111		E 11	25	N			
B 290	41		E 63	20	N		111		E 21	25	N			
B 293	46			225		200	48 52 845			225		200	48 52 845	
B 293B	41		E 27	25	N				SHLD B 293	25	N			
B 293L			P20-M*	25	N				J16-W*	25	N			
B 293R			P20-N*	25	N				J16-V*	25	N			
B 294	46			225		200	48 52 845			225		200	85	7
B 294A	41		SHLD B 294	25	N				E 28	25	N			
B 294L			P20-J*	25	N				J16-U*	25	N			
B 294R			P20-K*	25	N				J16-T*	25	N			
B 295	46			225		200	48 52 845			225		200	85	7
B 295A	41		SHLD B 295	25	N				E 28	25	N			
B 295L			P20-H*	25	N				J16-S*	25	N			

1 THE STD CONDUCTOR TERMINATION FIGURES ARE PER
2 DIMENSIONS ARE IN INCHES AND TWO PLACE DECIMALS.

MANNED SPACECRAFT CENTER HOUSTON, TEXAS | SIZE A | 1900943
SCALE - NONE | REV LTR AR | SHEET 39 OF 188

MIL 2089 - 4-65 WIR

GMI WIRING HARNESS B AR 1900943

CONDUCTOR INDIVIDUAL LENGTH NUMBER	ITEM NO.	3	FROM CUT WIRE OR SHIELD STRIP WIRE OR JACKET / CIRCUIT POINT 2	T I N 3	TERMINATION SPEC. 1 ITEM NO.	NO.	TO CUT WIRE OR SHIELD STRIP WIRE OR JACKET / CIRCUIT POINT 2	T I N 3	TERMINATION SPEC. 1 ITEM NO.	NO.
B 295R			P20-I*	25N			J16-R*	25N		
B 296	46			225	200 48 52 845			225	200 85 7	
B 296A	41		SHLD B 296	25N			E 28	25N		
B 296L			P20-F*	25N			J16-Q*	25N		
B 296R			P20-G*	25N			J16-P*	25N		
B 297	46			225	200 48 52 845			225	200 85 7	
B 297A	41		SHLD B 297	25N			E 28	25N		
B 297L			P20-D*	25N			J16-N*	25N		
B 297R			P20-E*	25N			J16-M*	25N		
B 298	46			225	200 48 52 845			225	200 85 7	
B 298A	41		SHLD B 298	25N			E 28	25N		
B 298L			P20-B*	25N			J16-K*	25N		
B 298R			P20-C*	25N			J16-J*	25N		
B 299	41		P92-N*	25N			TB23- 14	20N	111	
B 300	41		E 61	20N	111		E 6	25N		
B 301	41		E 63	20N	111		E 18	25N		
B 303	41		E 63	20N	111		E 17	25N		
B 305	41		E 12	25N			TB19-100	16N	107	

1 THE STD CONDUCTOR TERMINATION FIGURES ARE PER
2 DIMENSIONS ARE IN INCHES AND TWO PLACE DECIMALS.

MANNED SPACECRAFT CENTER HOUSTON, TEXAS | SIZE A | 1900943
SCALE - NONE | REV LTR AR | SHEET 40 OF 188

MIL 3089 - 4-63 WIR

GMI WIRING HARNESS B AR 1900943

CONDUCTOR INDIVIDUAL LENGTH NUMBER	ITEM NO.	3	FROM CUT WIRE OR SHIELD STRIP WIRE OR JACKET / CIRCUIT POINT 2	T I N 3	TERMINATION SPEC. 1 ITEM NO.	NO.	TO CUT WIRE OR SHIELD STRIP WIRE OR JACKET / CIRCUIT POINT 2	T I N 3	TERMINATION SPEC. 1 ITEM NO.	NO.
B 317L			P82-L	25N			TB19- 29CD	16N	107	
B 317R			P82-K	25N			TB19- 29AB	16N	107	
B 318	46			225	200 85 7			400	370 48 52 846	
B 318B	41		TB19- 24	16N	107		SHLD B 318	25N		
B 318L			P82-C*	25N			TB19- 25CD	16N	107	
B 318R			P82-B*	25N			TB19- 25AB	16N	107	
B 319	46			225	200 85 7			400	370 48 52 846	
B 319B	41		TB19- 24	16N	107		SHLD B 319	25N		
B 319L			P82-E*	25N			TB19- 23CD	16N	107	
B 319R			P82-D*	25N			TB19- 23AB	16N	107	
B 320	46			225	200 85 7			400	370 48 52 846	
B 320B	41		TB19- 27	16N	107		SHLD B 320	25N		
B 320L			P82-G*	25N			TB19- 26CD	16N	107	
B 320R			P82-F*	25N			TB19- 26AB	16N	107	
B 321	41		E 20	25N			TB17-100	16N	107	
B 322	41		E 20	25N			TB17- 97	16N	107	
B 323	41		E 20	25N			TB17- 94	16N	107	
B 324	41		E 20	25N			TB17- 91	16N	107	

1 THE STD CONDUCTOR TERMINATION FIGURES ARE PER
2 DIMENSIONS ARE IN INCHES AND TWO PLACE DECIMALS.

MANNED SPACECRAFT CENTER HOUSTON, TEXAS | SIZE A | 1900943
SCALE - NONE | REV LTR AR | SHEET 42 OF 188

MIL 3089 - 4-63 WIR

GMI WIRING HARNESS B AR 1900943

CONDUCTOR INDIVIDUAL LENGTH NUMBER	ITEM NO.	3	FROM CUT WIRE OR SHIELD STRIP WIRE OR JACKET / CIRCUIT POINT 2	T I N 3	TERMINATION SPEC. 1 ITEM NO.	NO.	TO CUT WIRE OR SHIELD STRIP WIRE OR JACKET / CIRCUIT POINT 2	T I N 3	TERMINATION SPEC. 1 ITEM NO.	NO.
B 325	41		E 20	25N			TB17- 88	16N	107	
B 326	41		E 20	25N			TB17- 86	16N	107	
B 327	41		E 20	25N			TB17- 83	16N	107	
B 328	41		E 20	25N			TB17- 80	16N	107	
B 329	41		E 20	25N			TB17- 77	16N	107	
B 330	42		P21-R*	25N			J18-FF	25N		
B 331	42		P21-M*	25N			J18-GG	25N		
B 332	41		E 14	25N			TB19- 69	16N	107	
B 333	41		E 14	25N			TB19- 66	16N	107	
B 334	41		E 14	25N			TB19- 63	16N	107	
B 335	41		E 14	25N			TB19- 61	16N	107	
B 336	41		E 14	25N			TB19- 58	16N	107	
B 337	41		E 14	25N			TB19- 55	16N	107	
B 338	41		E 14	25N			TB19- 52	16N	107	
B 339	41		E 14	25N			TB19- 49	16N	107	
B 340	41		TB 9- 7	16N	111		TB19- 39	16N	107	
B 341	41		E 12	25N			TB20- 83	16N	107	
B 342	41		E 12	25N			TB20- 85	16N	107	

1 THE STD CONDUCTOR TERMINATION FIGURES ARE PER
2 DIMENSIONS ARE IN INCHES AND TWO PLACE DECIMALS.

MANNED SPACECRAFT CENTER HOUSTON, TEXAS | SIZE A | 1900943
SCALE - NONE | REV LTR AR | SHEET 43 OF 188

MIL 3089 - 4-63 WIR

GMI WIRING HARNESS B AR 1900943

CONDUCTOR INDIVIDUAL LENGTH NUMBER	ITEM NO.	3	FROM CUT WIRE OR SHIELD STRIP WIRE OR JACKET / CIRCUIT POINT 2	T I N 3	TERMINATION SPEC. 1 ITEM NO.	NO.	TO CUT WIRE OR SHIELD STRIP WIRE OR JACKET / CIRCUIT POINT 2	T I N 3	TERMINATION SPEC. 1 ITEM NO.	NO.
B 306	41		E 12	25N			TB19- 97	16N	107	
B 307	40		P91-A	25N			TB25- 7	20N	111	
B 308	41		E 5	25N			TB22- 88	16N	107	
B 309	41		E 5	25N			TB22- 91	16N	107	
B 310	41		E 5	25N			TB22- 94	16N	107	
B 311	41		E 5	25N			TB22- 98	16N	107	
B 312	41		E 5	25N			TB22-100	16N	107	
B 313	47			225	200 85			300	270 48 52 846	
B 313B	41		TB20- 18	16N	107		SHLD B 313	25N		
B 313L			P36-K*	25N			TB20- 19CD	16N	107	
B 313R			P36-J*	25N			TB20- 19AB	16N	107	
B 314	41		E 62	20N	111		E 15	25N		
B 316	46			225	200 85 7			400	370 48 52 846	
B 316B	41		TB18- 9	16N	107		SHLD B 316	25N		
B 316L			P82-J	25N			TB18- 8CD	16N	107	
B 316R			P82-H	25N			TB18- 8AB	16N	107	
B 317	46			225	200 85 7			400	370 48 52 846	
B 317B	41		TB19- 30	16N	107		SHLD B 317	25N		

1 THE STD CONDUCTOR TERMINATION FIGURES ARE PER
2 DIMENSIONS ARE IN INCHES AND TWO PLACE DECIMALS.

MANNED SPACECRAFT CENTER HOUSTON, TEXAS | SIZE A | 1900943
SCALE - NONE | REV LTR AR | SHEET 41 OF 188

MIL 3089 - 4-63 WIR

GMI WIRING HARNESS B AR 1900943

CONDUCTOR INDIVIDUAL LENGTH NUMBER	ITEM NO.	2>	FROM CUT WIRE OR SHIELD STRIP WIRE OR JACKET CIRCUIT POINT 2>	T I N 2>	TERMINATION SPEC. 1> ITEM NO.	NO.	TO CUT WIRE OR SHIELD STRIP WIRE OR JACKET CIRCUIT POINT 2>	T I N 2>	TERMINATION SPEC 1> ITEM NO.	NO.
B 343	41		E 12	25N			TB20- 88	16N	107	
B 344	41		E 12	25N			TB20- 91	16N	107	
B 345	41		E 12	25N			TB20- 94	16N	107	
B 346	41		E 12	25N			TB20- 97	16N	107	
B 347	41		E 12	25N			TB20-100	16N	107	
B 348	41		P82-A	25N			TB25- 1	20N	111	
B 349	41		E 61	20N	111		E 4	25N		
B 350	41		E 61	20N	111		E 7	25N		
B 351	41		E 62	20N	111		E 10	25N		
B 354	41		E 5	25N			TB21-100	16N	107	
B 355	41		E 5	25N			TB21- 97	16N	107	
B 356	41		E 5	25N			TB21- 94	16N	107	
B 357	41		E 5	25N			TB21- 91	16N	107	
B 358	98			225	200 103 53 845			225	200 84	
B 358A	41		SHLD B 358	25N			E 30	25N		
B 358L			P21-NN	25N			J24-Y	25N		
B 358R			P21-LL	25N			J24-X	25N		
B 358Y			P21-MM	25N			J24-Z	25N		

1> THE STD CONDUCTOR TERMINATION FIGURES ARE PER
2> DIMENSIONS ARE IN INCHES AND TWO PLACE DECIMALS.

MANNED SPACECRAFT CENTER HOUSTON, TEXAS | SIZE A | 1900943
SCALE - NONE | REV LTR AR | SHEET 44 OF 188

MIL 2089 - 4-63 WIR

GMI WIRING HARNESS B AR 1900943

CONDUCTOR INDIVIDUAL LENGTH NUMBER	ITEM NO.	2>	FROM CUT WIRE OR SHIELD STRIP WIRE OR JACKET CIRCUIT POINT 2>	T I N 2>	TERMINATION SPEC. 1> ITEM NO.	NO.	TO CUT WIRE OR SHIELD STRIP WIRE OR JACKET CIRCUIT POINT 2>	T I N 2>	TERMINATION SPEC 1> ITEM NO.	NO.
B 359	08				120				120	
B 359L			P21-X*	25N			J24-DD	25N		
B 359R			P21-W*	25N			J24-CC	25N		
B 360	45			225	200 84			225	200 84	
B 360B	41		E 26	25N			SHLD B 360	25N		
B 360L			P21-BB	25N			J24-FF	25N		
B 360R			P21-AA	25N			J24-EE	25N		
B 361	98			225	200 103 53 845			225	200 84	
B 361A	41		SHLD B 361	25N			E 30	25N		
B 361L			P21-T*	25N			J24-J	25N		
B 361R			P21-U*	25N			J24-G	25N		
B 361Y			P21-S*	25N			J24-H	25N		
B 362	65			225	200 86 87 856			225	200 86 87 856	
B 362A	41		SHLD B 362	25N			P21-DD	25N		
B 362B	41		J24-N	25N			SHLD B 362	25N		
B 362E			P21-CC	25N			J24-M	25N		
B 363	46			225	200 85 7			400	370 48 52 846	
B 363B	41		TB19- 30	16N	107		SHLD B 363	25N		

1> THE STD CONDUCTOR TERMINATION FIGURES ARE PER
2> DIMENSIONS ARE IN INCHES AND TWO PLACE DECIMALS.

MANNED SPACECRAFT CENTER HOUSTON, TEXAS | SIZE A | 1900943
SCALE - NONE | REV LTR AR | SHEET 45 OF 188

MIL 2089 - 4-63 WIR

GMI WIRING HARNESS B AR 1900943

CONDUCTOR INDIVIDUAL LENGTH NUMBER	ITEM NO.	2>	FROM CUT WIRE OR SHIELD STRIP WIRE OR JACKET CIRCUIT POINT 2>	T I N 2>	TERMINATION SPEC. 1> ITEM NO.	NO.	TO CUT WIRE OR SHIELD STRIP WIRE OR JACKET CIRCUIT POINT 2>	T I N 2>	TERMINATION SPEC 1> ITEM NO.	NO.
B 363L			P82-J*	25N			TB19- 31CD	16N	107	
B 363R			P82-H*	25N			TB19- 31AB	16N	107	
B 364	46			225	200 85 7			400	370 48 52 846	
B 364B	41		TB19- 27	16N	107		SHLD B 364	25N		
B 364L			P82-X*	25N			TB19- 28CD	16N	107	
B 364R			P82-W*	25N			TB19- 28AB	16N	107	
B 365	16		P63-A	25N			TB25- 4	20N	111	
B 366	16		TB20- 11AB	25N	108		TB 9- 1	20N	111	
B 367	178		E 1	40N	179		TB 9- 5	40N	179	
B 368	41		E 62	25N	111		E 5	25N		
B 370	65			52	23 90 91 7			225	200 86 87 856	
B 370B	41		TB18- 76	16N	107		SHLD B 370	25N		
B 370E			P66-B1	11N	89		TB18- 77	16N	107	
B 370X			P66-B2				SHLD B 370			
B 371	65			52	23 90 91 7			225	200 86 87 85 6	
B 371B	41		TB18- 72CD	16N	107		SHLD B 371	25N		
B 371E			P66-D1	11N	89		TB18- 72AB			
B 371X			P66-D2				SHLD B 371			

1> THE STD CONDUCTOR TERMINATION FIGURES ARE PER
2> DIMENSIONS ARE IN INCHES AND TWO PLACE DECIMALS.

MANNED SPACECRAFT CENTER HOUSTON, TEXAS | SIZE A | 1900943
SCALE - NONE | REV LTR AR | SHEET 46 OF 188

MIL 2089 - 4-63 WIR

GMI WIRING HARNESS B AR 1900943

CONDUCTOR INDIVIDUAL LENGTH NUMBER	ITEM NO.	2>	FROM CUT WIRE OR SHIELD STRIP WIRE OR JACKET CIRCUIT POINT 2>	T I N 2>	TERMINATION SPEC. 1> ITEM NO.	NO.	TO CUT WIRE OR SHIELD STRIP WIRE OR JACKET CIRCUIT POINT 2>	T I N 2>	TERMINATION SPEC 1> ITEM NO.	NO.
B 372	41		P35-A	25N			TB25- 8	20N	111	
B 373	41		E 62	25N			E 9	25N		
B 374	41		E 62	25N			E 16	25N		
B 375			DELETE							
B 377	42		P35-X	25N			TB19- 98AB	16N	107	
B 378	41		P99-P*	25N			TB23- 14	20N	111	
B 379	16		J 3-HH	25N			TB13- 5	20N	111	
B 380	45			225	200 50 54 845			225	200 84	
B 380A	41		SHLD B 380	25N			E 30	25N		
B 380L			P21-HH	25N			J25-N*	25N		
B 380R			P21-GG	25N			J25-M*	25N		
B 381	45			225	200 84			225	200 84 7	
B 381B	41		E 25	25N			SHLD B 381	25N		
B 381L			P21-KK	25N			J25-K*	25N		
B 381R			P21-JJ	25N			J25-J*	25N		
B 382	44			225	200 83 7			300	270 51 55 835	
B 382B	41		E 44	25N			SHLD B 382	25N		
B 382L			P42-E	25N			TB10- 6	20N	111	

1> THE STD CONDUCTOR TERMINATION FIGURES ARE PER
2> DIMENSIONS ARE IN INCHES AND TWO PLACE DECIMALS.

MANNED SPACECRAFT CENTER HOUSTON, TEXAS | SIZE A | 1900943
SCALE - NONE | REV LTR AR | SHEET 47 OF 188

MIL 2089 - 4-63 WIR

CONDUCTOR INDIVIDUAL LENGTH NUMBER	ITEM NO.	2	FROM CUT WIRE OR SHIELD STRIP WIRE OR JACKET CIRCUIT POINT	2	1	2	TERMINATION SPEC. 1 ITEM NO.				NO.	TO CUT WIRE OR SHIELD STRIP WIRE OR JACKET CIRCUIT POINT	2	1	2	TERMINATION SPEC. 1 ITEM NO.				NO.
B 382R			P42-D	25N								TB10- 3	20N			111					
B 383	44			225		200	83			7			300		270	51	55	836			
B 383B	41		E 44	25N								SHLD B 383	25N								
B 383L			P44-E	25N								TB10- 5	20N			111					
B 383R			P44-D	25N								TB10- 3	20N			111					
B 384	65			52		23	90	91		7			225		200	86	87	856			
B 384B	41		TB17- 49CD	16N			107					SHLD B 384	25N								
B 384E			P67-A1	11N			89					TB17- 49AB	16N			107					
B 384X			P67-A2									SHLD B 384									
B 385	65			52		23	90	91		7			225		200	86	87	856			
B 385B	41		TB17- 48CD	16N			107					SHLD B 385	25N								
B 385E			P69-B1	11N			89					TB17- 48AB	16N			107					
B 385X			P69-B2									SHLD B 385									
B 386	65			52		23	90	91		7			225		200	86	87	856			
B 386B	41		TB17- 47CD	16N			107					SHLD B 386	25N								
B 386E			P67-B1	11N			89					TB17- 47AB	16N			107					
B 386X			P67-B2									SHLD B 386									
B 387	65			52		23	90	91		7			225		200	86	87	856			

1> THE STD CONDUCTOR TERMINATION FIGURES ARE PER
2> DIMENSIONS ARE IN INCHES AND TWO PLACE DECIMALS.

MANNED SPACECRAFT CENTER HOUSTON, TEXAS | SIZE A | 1900943
SCALE - NONE | REV LTR AR | SHEET 48 OF 188

MIL 2049 - 4-65 WIR

CONDUCTOR INDIVIDUAL LENGTH NUMBER	ITEM NO.	2	FROM CUT WIRE OR SHIELD STRIP WIRE OR JACKET CIRCUIT POINT	2	1	2	TERMINATION SPEC. 1 ITEM NO.				NO.	TO CUT WIRE OR SHIELD STRIP WIRE OR JACKET CIRCUIT POINT	2	1	2	TERMINATION SPEC. 1 ITEM NO.				NO.
B 387B	41		TB17- 46CD	16N			107					SHLD B 387	25N								
B 387E			P69-C1	11N			89					TB17- 46AB	16N			107					
B 387X			P69-C2									SHLD B 387									
B 388	65			52		23	90	91		7			225		200	86	87	856			
B 388B	41		TB17- 45CD	16N			107					SHLD B 388	25N								
B 388E			P67-C1	11N			89					TB17- 45AB	16N			107					
B 388X			P67-C2									SHLD B 388									
B 389	65			52		23	90	91		7			225		200	86	87	856			
B 389B	41		TB17- 44CD	16N			107					SHLD B 389	25N								
B 389E			P69-D1	11N			89					TB17- 44AB	16N			107					
B 389X			P69-D2									SHLD B 389									
B 390	41		E 61	25N								E 3	25N								
B 392	41		P82-Q*	25N								TB23- 18	20N			111					
B 393	40		J20-N	25N			157					TB 3- 6	20N			111					
B 394	40		J20-D	25N			157					TB 3- 8	20N			111					
B 395	41		E 61	25N								E 8	25N								
B 397	42		P34-N	25N								P37-EE	25N								
B 398	65			52		23	90	91		7			225		200	86	87	856			

1> THE STD CONDUCTOR TERMINATION FIGURES ARE PER
2> DIMENSIONS ARE IN INCHES AND TWO PLACE DECIMALS.

MANNED SPACECRAFT CENTER HOUSTON, TEXAS | SIZE A | 1900943
SCALE - NONE | REV LTR AR | SHEET 49 OF 188

MIL 2049 - 4-65 WIR

CONDUCTOR INDIVIDUAL LENGTH NUMBER	ITEM NO.	2	FROM CUT WIRE OR SHIELD STRIP WIRE OR JACKET CIRCUIT POINT	2	1	2	TERMINATION SPEC. 1 ITEM NO.				NO.	TO CUT WIRE OR SHIELD STRIP WIRE OR JACKET CIRCUIT POINT	2	1	2	TERMINATION SPEC. 1 ITEM NO.				NO.
B 398B	41		TB17- 37CD	16N			107					SHLD B 398	25N								
B 398E			P67-G1	11N			89					TB17- 37AB	16N			107					
B 398X			P67-G2									SHLD B 398									
B 399	65			52		23	90	91		7			225		200	86	87	856			
B 399B	41		TB17- 36CD	16N			107					SHLD B 399	25N								
B 399E			P69-H1	11N			89					TB17- 36AB	16N			107					
B 399X			P69-H2									SHLD B 399									
B 400	65			52		23	90	91		7			225		200	86	87	856			
B 400B	41		TB17- 35CD	16N			107					SHLD B 400	25N								
B 400E			P67-H1	11N			89					TB17- 35AB	16N			107					
B 400X			P67-H2									SHLD B 400									
B 401	65			52		23	90	91		7			225		200	86	87	856			
B 401B	41		TB17- 34CD	16N			107					SHLD B 401	25N								
B 401E			P69-J1	11N			89					TB17- 34AB	16N			107					
B 401X			P69-J2									SHLD B 401									
B 402	65			52		23	90	91		7			225		200	86	87	856			
B 402B	41		TB17- 33CD	16N			107					SHLD B 402	25N								
B 402E			P67-J1	11N			89					TB17- 33AB	16N			107					

1> THE STD CONDUCTOR TERMINATION FIGURES ARE PER
2> DIMENSIONS ARE IN INCHES AND TWO PLACE DECIMALS.

MANNED SPACECRAFT CENTER HOUSTON, TEXAS | SIZE A | 1900943
SCALE - NONE | REV LTR AR | SHEET 50 OF 188

MIL 2049 - 4-65 WIR

CONDUCTOR INDIVIDUAL LENGTH NUMBER	ITEM NO.	2	FROM CUT WIRE OR SHIELD STRIP WIRE OR JACKET CIRCUIT POINT	2	1	2	TERMINATION SPEC. 1 ITEM NO.				NO.	TO CUT WIRE OR SHIELD STRIP WIRE OR JACKET CIRCUIT POINT	2	1	2	TERMINATION SPEC. 1 ITEM NO.				NO.
B 402X			P67-J2									SHLD B 402									
B 403	65			52		23	90	91		7			225		200	86	87	856			
B 403B	41		TB17- 32CD	16N			107					SHLD B 403	25N								
B 403E			P70-A1	11N			89					TB17- 32AB	16N			107					
B 403X			P70-A2									SHLD B 403									
B 404	16		P33-B	25N								TB24- 3	40N			111					
B 405	16		P33-X	25N								TB24- 6	40N			111					
B 406	42		P92-C	25N								P82-U*	25N								
B 407	41		TB20- 37AB	16N			107					TB24- 9	20N			111					
B 408	46			225		200	85						400		370	48	52	846			
B 408B	41		TB19- 78	16N			107					SHLD B 408	25N								
B 408L			P36-D	25N								TB19- 77CD	16N			107					
B 408R			P36-E	25N								TB19- 77AB	16N			107					
B 409	46			225		200	85			7			400		370	48	52	846			
B 409B	41		TB21- 76	16N			107					SHLD B 409	25N								
B 409L			P91-B*	25N								TB21- 74	16N			107					
B 409R			P91-B	25N								TB21- 75	16N			107					
B 410	41		P71-A	25N								TB25- 7	20N			111					

1> THE STD CONDUCTOR TERMINATION FIGURES ARE PER
2> DIMENSIONS ARE IN INCHES AND TWO PLACE DECIMALS.

MANNED SPACECRAFT CENTER HOUSTON, TEXAS | SIZE A | 1900943
SCALE - NONE | REV LTR AR | SHEET 51 OF 188

MIL 2049 - 4-65 WIR

CONDUCTOR NUMBER	INDIVIDUAL LENGTH ITEM NO.	2	FROM CUT WIRE OR SHIELD STRIP WIRE OR JACKET CIRCUIT POINT	2	TIN	TERMINATION SPEC. 1 ITEM NO.	NO.	TO CUT WIRE OR SHIELD STRIP WIRE OR JACKET CIRCUIT POINT	2	TIN	TERMINATION SPEC. 1 ITEM NO.	NO.
B 411	42		P35-G*	25N				TB20- 81AB	16N		107	
B 412	65			52	23	90 91	7		225	200	86 87 856	
B 412B	41		TB20- 78	16N		107		SHLD B 412	25N			
B 412E			P66-A1	11N		89		TB20- 79	16N		107	
B 412X			P66-A2					SHLD B 412				
B 413	65			52	23	90 91	7		225	200	86 87 856	
B 413B	41		TB20- 70	16N		107		SHLD B 413	25N			
B 413E			P66-E1	11N		89		TB20- 71	16N		107	
B 413X			P66-E2					SHLD B 413				
B 414	41		P34-A	25N				TB25- 8	20N		111	
B 415	65			52	23	90 91	7		225	200	86 87 856	
B 415B	41		P16-V	25N				SHLD B 415	25N			
B 415E			P67-D1	11N		89		P16-U	25N			
B 415X			P67-D2					SHLD B 415				
B 416	65			52	23	90 91	7		225	200	86 87 856	
B 416B	41		P16-X	25N				SHLD B 416	25N			
B 416E			P69-E1	11N		89		P16-W	25N			
B 416X			P69-E2					SHLD B 416				

1> THE STD CONDUCTOR TERMINATION FIGURES ARE PER
2> DIMENSIONS ARE IN INCHES AND TWO PLACE DECIMALS.

MANNED SPACECRAFT CENTER HOUSTON, TEXAS | SIZE A | 1900943
SCALE - NONE | REV LTR AR | SHEET 52 OF 188

MIL 2-65 4-63 W/B

CONDUCTOR NUMBER	INDIVIDUAL LENGTH ITEM NO.	2	FROM CUT WIRE OR SHIELD STRIP WIRE OR JACKET CIRCUIT POINT	2	TIN	TERMINATION SPEC. 1 ITEM NO.	NO.	TO CUT WIRE OR SHIELD STRIP WIRE OR JACKET CIRCUIT POINT	2	TIN	TERMINATION SPEC. 1 ITEM NO.	NO.
B 417	65			52	23	90 91	7		225	200	86 87 856	
B 417B	41		P16-Z	25N				SHLD B 417	25N			
B 417E			P67-E1	11N		89		P16-Y	25N			
B 417X			P67-E2					SHLD B 417				
B 418	65			52	23	90 91	7		225	200	86 87 856	
B 418B	41		P16-B*	25N				SHLD B 418	25N			
B 418E			P69-F1	11N		89		P16-A*	25N			
B 418X			P69-F2					SHLD B 418				
B 419	65			52	23	90 91	7		225	200	86 87 856	
B 419B	41		P16-N*	25N				SHLD B 419	25N			
B 419E			P67-F1	11N		89		P16-M*	25N			
B 419X			P67-F2					SHLD B 419				
B 420	65			52	23	90 91	7		225	200	86 87 856	
B 420B	41		P17-G	25N				SHLD B 420	25N			
B 420E			P69-G1	11N		89		P17-F	25N			
B 420X			P69-G2					SHLD B 420				
B 421	65			52	23	90 91	7		225	200	86 87 856	
B 421B	41		P16-G	25N				SHLD B 421	25N			

1> THE STD CONDUCTOR TERMINATION FIGURES ARE PER
2> DIMENSIONS ARE IN INCHES AND TWO PLACE DECIMALS.

MANNED SPACECRAFT CENTER HOUSTON, TEXAS | SIZE A | 1900943
SCALE - NONE | REV LTR AR | SHEET 53 OF 188

MIL 2-65 4-63 W/B

CONDUCTOR NUMBER	INDIVIDUAL LENGTH ITEM NO.	2	FROM CUT WIRE OR SHIELD STRIP WIRE OR JACKET CIRCUIT POINT	2	TIN	TERMINATION SPEC. 1 ITEM NO.	NO.	TO CUT WIRE OR SHIELD STRIP WIRE OR JACKET CIRCUIT POINT	2	TIN	TERMINATION SPEC. 1 ITEM NO.	NO.
B 421E			P68-A1	11N		89		P16-F	25N			
B 421X			P68-A2					SHLD B 421				
B 422	65			52	23	90 91	7		225	200	86 87 856	
B 422B	41		P16-J	25N				SHLD B 422	25N			
B 422E			P70-B1	11N		89		P16-H	25N			
B 422X			P70-B2					SHLD B 422				
B 423	65			52	23	90 91	7		225	200	86 87 856	
B 423B	41		P16-L	25N				SHLD B 423	25N			
B 423E			P68-B1	11N		89		P16-K	25N			
B 423X			P68-B2					SHLD B 423				
B 424	42		P64-EE	25N				P16-Y*	25N			
B 425	65			52	23	90 91	7		225	200	86 87 856	
B 425B	41		P16-S	25N				SHLD B 425	25N			
B 425E			P66-J1	11N		89		P16-T	25N			
B 425X			P66-J2					SHLD B 425				
B 426	41		P64-BB	25N				P16-AA	25N			
B 427	65			52	23	90 91	7		225	200	86 87 856	
B 427B	41		P16-N	25N				SHLD B 427	25N			

1> THE STD CONDUCTOR TERMINATION FIGURES ARE PER
2> DIMENSIONS ARE IN INCHES AND TWO PLACE DECIMALS.

MANNED SPACECRAFT CENTER HOUSTON, TEXAS | SIZE A | 1900943
SCALE - NONE | REV LTR AR | SHEET 54 OF 188

MIL 2-65 4-63 W/B

CONDUCTOR NUMBER	INDIVIDUAL LENGTH ITEM NO.	2	FROM CUT WIRE OR SHIELD STRIP WIRE OR JACKET CIRCUIT POINT	2	TIN	TERMINATION SPEC. 1 ITEM NO.	NO.	TO CUT WIRE OR SHIELD STRIP WIRE OR JACKET CIRCUIT POINT	2	TIN	TERMINATION SPEC. 1 ITEM NO.	NO.
B 427E			P70-C1	11N		89		P16-M	25N			
B 427X			P70-C2					SHLD B 427				
B 428	65			52	23	90 91	7		225	200	86 87 856	
B 428B	41		P16-R	25N				SHLD B 428	25N			
B 428E			P68-C1	11N		89		P16-P	25N			
B 428X			P68-C2					SHLD B 428				
B 429	65			52	23	90 91	7		225	200	86 87 856	
B 429B	41		P17-K*	25N				SHLD B 429	25N			
B 429E			P70-D1	11N		89		P17-J*	25N			
B 429X			P70-D2					SHLD B 429				
B 430	65			52	23	90 91	7		225	200	86 87 856	
B 430B	41		P16-D*	25N				SHLD B 430	25N			
B 430E			P68-G1	11N		89		P16-C*	25N			
B 430X			P68-G2					SHLD B 430				
B 431	65			52	23	90 91	7		225	200	86 87 856	
B 431B	41		P16-G*	25N				SHLD B 431	25N			
B 431E			P70-H1	11N		89		P16-F*	25N			
B 431X			P70-H2					SHLD B 431				

1> THE STD CONDUCTOR TERMINATION FIGURES ARE PER
2> DIMENSIONS ARE IN INCHES AND TWO PLACE DECIMALS.

MANNED SPACECRAFT CENTER HOUSTON, TEXAS | SIZE A | 1900943
SCALE - NONE | REV LTR AR | SHEET 55 OF 188

MIL 2-65 4-63 W/B

CONDUCTOR NUMBER	INDIVIDUAL LENGTH ITEM NO.	2	FROM CUT WIRE OR SHIELD STRIP WIRE OR JACKET CIRCUIT POINT	2	T I N	2	TERMINATION SPEC. 1 ITEM NO.	NO.	TO CUT WIRE OR SHIELD STRIP WIRE OR JACKET CIRCUIT POINT	2	T I N	2	TERMINATION SPEC. 1 ITEM NO.	NO.
B 432	65			52		23	90 91	7		225		200	86 87 856	
B 432B	41		P16-C	25N					SHLD B 432	25N				
B 432E			P68-H1	11N			89		P16-B	25N				
B 432X			P68-H2						SHLD B 432					
B 433	65			52		23	90 91	7		225		200	86 87 856	
B 433B	41		P16-E	25N					SHLD B 433	25N				
B 433E			P70-J1	11N			89		P16-D	25N				
B 433X			P70-J2						SHLD B 433					
B 434	41		E 61	25N					E 2	25N				
B 436			DELETED											
B 436A			DELETED											
B 436L			DELETED											
B 436R			DELETED											
B 437			DELETED											
B 437A			DELETED											
B 437L			DELETED											
B 437R			DELETED											
B 438			DELETED											

1 THE STD CONDUCTOR TERMINATION FIGURES ARE PER
2 DIMENSIONS ARE IN INCHES AND TWO PLACE DECIMALS.

MANNED SPACECRAFT CENTER HOUSTON, TEXAS | SIZE A | 1900943
SCALE-NONE | REV LTR AR | SHEET 56 OF 188

MIL 2089 - 4-65 WIR

CONDUCTOR NUMBER	INDIVIDUAL LENGTH ITEM NO.	2	FROM CUT WIRE OR SHIELD STRIP WIRE OR JACKET CIRCUIT POINT	2	T I N	2	TERMINATION SPEC. 1 ITEM NO.	NO.	TO CUT WIRE OR SHIELD STRIP WIRE OR JACKET CIRCUIT POINT	2	T I N	2	TERMINATION SPEC. 1 ITEM NO.	NO.
B 438A			DELETED											
B 438L			DELETED											
B 438R			DELETED											
B 439	46			225		200	85	7		400		370	48 52 846	
B 439B	41		TB21- 70	16N			107		SHLD B 439	25N				
B 439L			P91-F*	25N					TB21- 69CD	16N			107	
B 439R			P91-F	25N					TB21- 69AB	16N			107	
B 440	46			225		200	85	7		400		370	48 52 846	
B 440B	41		TB18- 99	16N			107		SHLD B 440	25N				
B 440L			P91-D*	25N					TB18- 98CD	16N			107	
B 440R			P91-D	25N					TB18- 98AB	16N			107	
B 441	46			225		200	48 52 845			225		200	85	7
B 441A	41		SHLD B 441	25N					E 33	25N				
B 441L			P91-C*	25N					P 1-C	25N				
B 441R			P91-C	25N					P 1-F	25N				
B 442	46			225		200	48 52 845			225		200	85	7
B 442A	41		SHLD B 442	25N					E 33	25N				
B 442L			P91-E*	25N					P 1-R	25N				

1 THE STD CONDUCTOR TERMINATION FIGURES ARE PER
2 DIMENSIONS ARE IN INCHES AND TWO PLACE DECIMALS.

MANNED SPACECRAFT CENTER HOUSTON, TEXAS | SIZE A | 1900943
SCALE-NONE | REV LTR AR | SHEET 57 OF 188

MIL 2089 - 4-65 WIR

CONDUCTOR NUMBER	INDIVIDUAL LENGTH ITEM NO.	2	FROM CUT WIRE OR SHIELD STRIP WIRE OR JACKET CIRCUIT POINT	2	T I N	2	TERMINATION SPEC. 1 ITEM NO.	NO.	TO CUT WIRE OR SHIELD STRIP WIRE OR JACKET CIRCUIT POINT	2	T I N	2	TERMINATION SPEC. 1 ITEM NO.	NO.
B 442R			P91-E	25N					P 1-G	25N				
B 443	46			225		200	48 52 845			225		200	85	7
B 443A	41		SHLD B 443	25N					E 33	25N				
B 443L			P91-G*	25N					P 1-U	25N				
B 443R			P91-G	25N					P 1-K	25N				
B 444	46			225		200	85	7		400		370	48 52 845	
B 444B	41		TB18- 78	16N			107		SHLD B 444	25N				
B 444L			P82-D	25N					TB18- 76	16N			107	
B 444R			P82-E	25N					TB18- 77	16N			107	
B 445	45			225		200	84			225		200	50 54 84	
B 445A	41		SHLD B445	25N					E32	25N				
B 445L			P35-B*	25N					J22-Q*	25N				
B 445R			P35-C*	25N					J22-P*	25N				
B 446	45			225		200	84			400		370	50 54 846	
B 446B	41		TB20- 75	16N			107		SHLD B 446	25N				
B 446L			P35-Y	25N					TB20- 73CD	16N			108	
B 446R			P35-Z	25N					TB20- 74AB	16N			108	
B 447	40		P59-A	25N					TB25- 4	20N			111	

1 THE STD CONDUCTOR TERMINATION FIGURES ARE PER
2 DIMENSIONS ARE IN INCHES AND TWO PLACE DECIMALS.

MANNED SPACECRAFT CENTER HOUSTON, TEXAS | SIZE A | 1900943
SCALE-NONE | REV LTR AR | SHEET 58 OF 188

MIL 2089 - 4-65 WIR

CONDUCTOR NUMBER	INDIVIDUAL LENGTH ITEM NO.	2	FROM CUT WIRE OR SHIELD STRIP WIRE OR JACKET CIRCUIT POINT	2	T I N	2	TERMINATION SPEC. 1 ITEM NO.	NO.	TO CUT WIRE OR SHIELD STRIP WIRE OR JACKET CIRCUIT POINT	2	T I N	2	TERMINATION SPEC 1 ITEM NO.	NO.
B 448	42		P41-S*	25N					J23-A	25N				
B 449	42		P41-T*	25N					J23-B	25N				
B 450	42		P41-U*	25N					J23-C	25N				
B 451	42		P41-V*	25N					J23-D	25N				
B 452	42		P41-W*	25N					J23-E	25N				
B 453	42		P41-X*	25N					J23-F	25N				
B 454	42		P41-Y*	25N					J23-G	25N				
B 455	42		P41-Z*	25N					J23-H	25N				
B 456	42		P41-AA	25N					J23-J	25N				
B 457	42		P41-BB	25N					J23-V	25N				
B 458	42		P41-CC	25N					J23-W	25N				
B 459	42		P41-DD	25N					J23-X	25N				
B 460	42		P41-EE	25N					J23-Y	25N				
B 461	42		P41-FF	25N					J23-Z	25N				
B 462	42		P41-GG	25N					J23-A*	25N				
B 463	42		P41-HH	25N					J23-B*	25N				
B 464	42		P41-JJ	25N					J23-C*	25N				
B 465	42		P41-KK	25N					J23-D*	25N				

1 THE STD CONDUCTOR TERMINATION FIGURES ARE PER
2 DIMENSIONS ARE IN INCHES AND TWO PLACE DECIMALS.

MANNED SPACECRAFT CENTER HOUSTON, TEXAS | SIZE A | 1900943
SCALE-NONE | REV LTR AR | SHEET 59 OF 188

MIL 2089 - 4-65 WIR

CONDUCTOR INDIVIDUAL LENGTH NUMBER	ITEM NO. (2)	FROM CUT WIRE OR SHIELD STRIP WIRE OR JACKET CIRCUIT POINT (2)	TIN (2)	TERMINATION SPEC. (1) ITEM NO.	NO.	TO CUT WIRE OR SHIELD STRIP WIRE OR JACKET CIRCUIT POINT (2)	TIN (2)	TERMINATION SPEC. (1) ITEM NO.	NO.
B 466	42	P41-LL	25N			J23-E*	25N		
B 467	42	P41-MM	25N			J23-Q*	25N		
B 468	42	P41-NN	25N			J23-R*	25N		
B 469	42	P41-PP	25N			J23-S*	25N		
B 470	41	P71-S*	25N			TB 9- 4	20N	111	
B 471	65		52	23 90 91	7		225	200 86 87 856	
B 471B	41	TB20- 81CD	16N	107		SHLD B 471	25N		
B 471E		P66-C1	11N	89		TB20- 68AB	16N	107	
B 471X		P66-C2				SHLD B 471			
B 472	16	TB23- 12	20N	111		P31-M	25N		
B 473	46		225	200 85			400	370 85	
B 473B	41	TB19- 52	16N			SHLD B 473	25N		
B 473L		P35-E*	25N			TB19- 51CD	16N	107	
B 473R		P35-F*	25N			TB19- 51AB	16N	107	
B 474	46		225	200 85	7		225	200 48 52 845	
B 474B	41	E 40	25N			SHLD B 474	25N		
B 474L		P10-PP	25N			J 3-B	25N		
B 474R		P10-AA	25N			J 3-A	25N		

(1) THE STD CONDUCTOR TERMINATION FIGURES ARE PER
(2) DIMENSIONS ARE IN INCHES AND TWO PLACE DECIMALS.

MANNED SPACECRAFT CENTER HOUSTON, TEXAS | SIZE A | 1900943
SCALE-NONE | REV LTR AR | SHEET 60 OF 188

MIL 2049 4-63 WIR

CONDUCTOR INDIVIDUAL LENGTH NUMBER	ITEM NO. (2)	FROM CUT WIRE OR SHIELD STRIP WIRE OR JACKET CIRCUIT POINT (2)	TIN (2)	TERMINATION SPEC. (1) ITEM NO.	NO.	TO CUT WIRE OR SHIELD STRIP WIRE OR JACKET CIRCUIT POINT (2)	TIN (2)	TERMINATION SPEC. (1) ITEM NO.	NO.
B 475	46		225	200 85	7		225	200 48 52 845	
B 475B	41	E 40	25N			SHLD B 475	25N		
B 475L		P10-A*	25N			J 3-E	25N		
B 475R		P10-A	25N			J 3-D	25N		
B 476	46		225	200 85	7		225	200 48 52 845	
B 476B	41	E 40	25N			SHLD B 476	25N		
B 476L		P85-V*	25N			J 3-H	25N		
B 476R		P85-U*	25N			J 3-G	25N		
B 477	46		225	200 85	7		225	200 48 52 845	
B 477B	41	E 40	25N			SHLD B 477	25N		
B 477L		P84-V*	25N			J 3-L	25N		
B 477R		P84-U*	25N			J 3-K	25N		
B 478	46		225	200 85	7		225	200 48 52 845	
B 478B	41	E 40	25N			SHLD B 478	25N		
B 478L		P 9-V*	25N			J 3-P	25N		
B 478R		P 9-U*	25N			J 3-N	25N		
B 479	46		225	200 85	7		225	200 48 52 845	
B 479B	41	E 40	25N			SHLD B 479	25N		

(1) THE STD CONDUCTOR TERMINATION FIGURES ARE PER
(2) DIMENSIONS ARE IN INCHES AND TWO PLACE DECIMALS.

MANNED SPACECRAFT CENTER HOUSTON, TEXAS | SIZE A | 1900943
SCALE-NONE | REV LTR AR | SHEET 61 OF 188

MIL 2049 4-63 WIR

CONDUCTOR INDIVIDUAL LENGTH NUMBER	ITEM NO. (2)	FROM CUT WIRE OR SHIELD STRIP WIRE OR JACKET CIRCUIT POINT (2)	TIN (2)	TERMINATION SPEC. (1) ITEM NO.	NO.	TO CUT WIRE OR SHIELD STRIP WIRE OR JACKET CIRCUIT POINT (2)	TIN (2)	TERMINATION SPEC. (1) ITEM NO.	NO.
B 479L		P86-V*	25N			J 3-T	25N		
B 479R		P86-U*	25N			J 3-S	25N		
B 480	46		225	200 85	7		225	200 48 52 845	
B 480B	41	E 40	25N			SHLD B 480	25N		
B 480L		P83-Z*	25N			J 3-Q*	25N		
B 480R		P83-Y*	25N			J 3-P*	25N		
B 481	46		225	200 85	7		225	200 48 52 845	
B 481B	41	E 40	25N			SHLD B 481	25N		
B 481L		P83-V*	25N			J 3-T*	25N		
B 481R		P83-U*	25N			J 3-S*	25N		
B 482	41	P64-FF	25N			TB17- 2AB	16N	107	
B 484	46		225	200 85	7		400	370 48 52 846	
B 484B	41	TB20- 21	16N	107		SHLD B 484	25N		
B 484L		P19-C	25N			TB20- 20CD	16N	107	
B 484R		P19-B	25N			TB20- 20AB	16N	107	
B 485	42	P92-B	25N			TB21- 77AB	16N	107	
B 486	46		225	200 85	7		400	370 48 52 846	
B 486B	41	TB17- 50	16N	107		SHLD B 486	25N		

(1) THE STD CONDUCTOR TERMINATION FIGURES ARE PER
(2) DIMENSIONS ARE IN INCHES AND TWO PLACE DECIMALS.

MANNED SPACECRAFT CENTER HOUSTON, TEXAS | SIZE A | 1900943
SCALE-NONE | REV LTR AR | SHEET 62 OF 188

MIL 2049 4-63 WIR

CONDUCTOR INDIVIDUAL LENGTH NUMBER	ITEM NO. (2)	FROM CUT WIRE OR SHIELD STRIP WIRE OR JACKET CIRCUIT POINT (2)	TIN (2)	TERMINATION SPEC. (1) ITEM NO.	NO.	TO CUT WIRE OR SHIELD STRIP WIRE OR JACKET CIRCUIT POINT (2)	TIN (2)	TERMINATION SPEC. (1) ITEM NO.	NO.
B 486L		P10-LL	25N			TB17- 51CD	16N	107	
B 486R		P10-KK	25N			TB17- 51AB	16N	107	
B 487	46		225	200 85	7		400	370 48 52 846	
B 487B	41	TB17- 53	16N	107		SHLD B 487	25N		
B 487L		P10-MM	25N			TB17- 52CD	16N	107	
B 487R		P10-MM	25N			TB17- 52AB	16N	107	
B 488	46		225	200 85	7		400	370 48 52 846	
B 488B	41	TB17- 56	16N	107		SHLD B 488	25N		
B 488L		P84-LL	25N			TB17- 55CD	16N	107	
B 488R		P84-KK	25N			TB17- 55AB	16N	107	
B 489	46		225	200 85	7		400	370 48 52 846	
B 489B	41	TB17- 56	16N	107		SHLD B 489	25N		
B 489L		P 9-LL	25N			TB17- 57CD	16N	107	
B 489R		P 9-KK	25N			TB17- 57AB	16N	107	
B 490	46		225	200 85	7		400	370 48 52 846	
B 490B	41	TB17- 56	16N	107		SHLD B 490	25N		
B 490L		P86-LL	25N			TB17- 58CD	16N	107	
B 490R		P86-KK	25N			TB17- 58AB	16N	107	

(1) THE STD CONDUCTOR TERMINATION FIGURES ARE PER
(2) DIMENSIONS ARE IN INCHES AND TWO PLACE DECIMALS.

MANNED SPACECRAFT CENTER HOUSTON, TEXAS | SIZE A | 1900943
SCALE-NONE | REV LTR AR | SHEET 63 OF 188

MIL 2049 4-63 WIR

CONDUCTOR NUMBER	INDIVIDUAL LENGTH ITEM NO.	2	FROM CUT WIRE OR SHIELD STRIP WIRE OR JACKET CIRCUIT POINT	2	T I N	2	TERMINATION SPEC 1 ITEM NO.	NO.	TO CUT WIRE OR SHIELD STRIP WIRE OR JACKET CIRCUIT POINT	2	T I N	2	TERMINATION SPEC 1 ITEM NO.	NO.
B 491			DELETE											
B 491A			DELETE											
B 491B			DELETE											
B 491E			DELETE											
B 492	41		P71-T*	25N					TB23- 17	20N			111	
B 493	42		P36-PP	25N					TB21- 72	16N			107	
B 496	16		P43-R	25N					TB24- 5	20N			111	
B 499	16		P43-S	25N					TB24- 8	20N			111	
B 500	16		P45-R	25N					TB24- 2	20N			111	
B 501	16		P45-S	25N					TB24- 5	20N			111	
B 502	46			225	200	85		7		400	370	85		7
B 502B	41		E 30	25N					SHLD B 502	25N				
B 502L			P91-U*	25N					P21-B	16N			107	
B 502R			P91-U	25N					P21-A	16N			107	
B 504	42		P99-T	25N					P24-V	25N				
B 505	42		P99-N	25N					P24-Y	25N				
B 506	42		P34-D*	25N					P24-A*	25N				
B 507			DELETE											

1 THE STD CONDUCTOR TERMINATION FIGURES ARE PER
2 DIMENSIONS ARE IN INCHES AND TWO PLACE DECIMALS.

MANNED SPACECRAFT CENTER HOUSTON, TEXAS | SIZE A | 1900943
SCALE - NONE | REV LTR AR | SHEET 64 OF 188

MIL 2049 - 4-63 WIR

CONDUCTOR NUMBER	INDIVIDUAL LENGTH ITEM NO.	2	FROM CUT WIRE OR SHIELD STRIP WIRE OR JACKET CIRCUIT POINT	2	T I N	2	TERMINATION SPEC 1 ITEM NO.	NO.	TO CUT WIRE OR SHIELD STRIP WIRE OR JACKET CIRCUIT POINT	2	T I N	2	TERMINATION SPEC 1 ITEM NO.	NO.
B 508	42		P99-A*	25N					P25-B*	25N				
B 509	41		P34-J	25N					P25-V	25N				
B 510	42		P99-Q*	25N					P24-R	25N				
B 511	42		P99-W*	25N					P24-P	25N				
B 512	42		P99-AA	25N					P24-KK	25N				
B 513	42		P99-U*	25N					TB 8- 6	20N			111	
B 514	42		P99-G*	25N					P24-D*	25N				
B 515	46			225	200	85		7		400	370	48	52	846
B 515B	41		TB17- 68	16N			107		SHLD B 515	25N				
B 515L			P85-R*	25N					TB17- 69CD	16N			107	
B 515R			P85-P*	25N					TB17- 69AB	16N			107	
B 516	46			225	200	85		7		400	370	48	52	846
B 516B	41		TB17- 59	16N			107		SHLD B 516	25N				
B 516L			P85-NN	25N					TB17- 60CD	16N			107	
B 516R			P85-MM	25N					TB17- 60AB	16N			107	
B 517	46			225	200	85		7		225	200	48	52	845
B 517B	41		E 41	25N					SHLD B 517	25N				
B 517L			P10-K*	25N					J 4-B	25N				

1 THE STD CONDUCTOR TERMINATION FIGURES ARE PER
2 DIMENSIONS ARE IN INCHES AND TWO PLACE DECIMALS.

MANNED SPACECRAFT CENTER HOUSTON, TEXAS | SIZE A | 1900943
SCALE - NONE | REV LTR AR | SHEET 65 OF 188

MIL 2049 - 4-63 WIR

CONDUCTOR NUMBER	INDIVIDUAL LENGTH ITEM NO.	2	FROM CUT WIRE OR SHIELD STRIP WIRE OR JACKET CIRCUIT POINT	2	T I N	2	TERMINATION SPEC 1 ITEM NO.	NO.	TO CUT WIRE OR SHIELD STRIP WIRE OR JACKET CIRCUIT POINT	2	T I N	2	TERMINATION SPEC 1 ITEM NO.	NO.
B 517R			P10-I*	25N					J 4-A	25N				
B 518	46			225	200	85		7		225	200	48	52	845
B 518B	41		E 41	25N					SHLD B 518	25N				
B 518L			P10-Z	25N					J 4-E	25N				
B 518R			P10-Y	25N					J 4-D	25N				
B 519	46			225	200	85		7		225	200	48	52	845
B 519B	41		E 41	25N					SHLD B 519	25N				
B 519L			P85-GG	25N					J 4-H	25N				
B 519R			P85-FF	25N					J 4-G	25N				
B 520	46			225	200	85		7		400	370	48	52	846
B 520B	41		TB17- 62	16N			107		SHLD B 520	25N				
B 520L			P84-NN	25N					TB17- 61CD	16N			107	
B 520R			P84-MM	25N					TB17- 61AB	16N			107	
B 521	46			225	200	85		7		400	370	48	52	846
B 521B	41		TB17- 62	16N			107		SHLD B 521	25N				
B 521L			P 9-NN	25N					TB17- 63CD	16N			107	
B 521R			P 9-MM	25N					TB17- 63AB	16N			107	
B 522	46			225	200	85		7		400	370	48	52	846

1 THE STD CONDUCTOR TERMINATION FIGURES ARE PER
2 DIMENSIONS ARE IN INCHES AND TWO PLACE DECIMALS.

MANNED SPACECRAFT CENTER HOUSTON, TEXAS | SIZE A | 1900943
SCALE - NONE | REV LTR AR | SHEET 66 OF 188

MIL 2049 - 4-63 WIR

CONDUCTOR NUMBER	INDIVIDUAL LENGTH ITEM NO.	2	FROM CUT WIRE OR SHIELD STRIP WIRE OR JACKET CIRCUIT POINT	2	T I N	2	TERMINATION SPEC 1 ITEM NO.	NO.	TO CUT WIRE OR SHIELD STRIP WIRE OR JACKET CIRCUIT POINT	2	T I N	2	TERMINATION SPEC 1 ITEM NO.	NO.
B 522B	41		TB17- 65	16N			107		SHLD B 522	25N				
B 522L			P83-LL	25N					TB17- 66CD	16N			107	
B 522R			P83-KK	25N					TB17- 66AB	16N			107	
B 523	46			225	200	85		7		400	370	48	52	846
B 523B	41		TB17- 68	16N			107		SHLD B 523	25N				
B 523L			P83-NN	25N					TB17- 67CD	16N			107	
B 523R			P83-MM	25N					TB17- 67AB	16N			107	
B 524	46			225	200	85		7		400	370	48	52	846
B 524B	41		TB17- 65	16N			107		SHLD B 524	25N				
B 524L			P86-NN	25N					TB17- 64CD	16N			107	
B 524R			P86-MM	25N					TB17- 64AB	16N			107	
B 525	46			225	200	85		7		225	200	48	52	845
B 525B	41		E 41	25N					SHLD B 525	25N				
B 525L			P84-GG	25N					J 4-L	25N				
B 525R			P84-FF	25N					J 4-K	25N				
B 526	46			225	200	85		7		225	200	48	52	845
B 526B	41		E 41	25N					SHLD B 526	25N				
B 526L			P 9-GG	25N					J 4-P	25N				

1 THE STD CONDUCTOR TERMINATION FIGURES ARE PER
2 DIMENSIONS ARE IN INCHES AND TWO PLACE DECIMALS.

MANNED SPACECRAFT CENTER HOUSTON, TEXAS | SIZE A | 1900943
SCALE - NONE | REV LTR AR | SHEET 67 OF 188

MIL 2049 - 4-63 WIR

CONDUCTOR INDIVIDUAL LENGTH NUMBER	ITEM NO.	3	FROM CUT WIRE OR SHIELD STRIP WIRE OR JACKET CIRCUIT POINT	2	TIN	3	TERMINATION SPEC. 1 ITEM NO.				NO.	TO CUT WIRE OR SHIELD STRIP WIRE OR JACKET CIRCUIT POINT	2	TIN	3	TERMINATION SPEC. 1 ITEM NO.				NO.
B 526R			P 9-FF	25	N							J 4-N	25	N							
B 527	46			225		200	85			7			225		200	48	52	845			
B 527B	41		E 41	25	N							SHLD B 527	25	N							
B 527L			P86-GG	25	N							J 4-T	25	N							
B 527R			P86-FF	25	N							J 4-S	25	N							
B 528	46			225		200	85			7			225		200	48	52	845			
B 528B	41		E 41	25	N							SHLD B 528	25	N							
B 528L			P83-J*	25	N							J 4-J*	25	N							
B 528R			P83-H*	25	N							J 4-V	25	N							
B 529	46			225		200	85			7			225		200	48	52	845			
B 529B	41		E 41	25	N							SHLD B 529	25	N							
B 529L			P83-GG	25	N							J 4-N*	25	N							
B 529R			P83-FF	25	N							J 4-M*	25	N							
B 530	46			225		200	48	52	845				400		370	48	52	846			
B 530A	41		SHLD B 530	25	N							E 29	25	N							
B 530L			P20-P*	25	N							TB20- 76CD	16	N		107					
B 530R			P20-Q*	25	N							TB20- 76AB	16	N		107					
B 531	46			225		200	85			7			400		370	48	52	846			

1 THE STD CONDUCTOR TERMINATION FIGURES ARE PER
2 DIMENSIONS ARE IN INCHES AND TWO PLACE DECIMALS.

MANNED SPACECRAFT CENTER HOUSTON, TEXAS | SIZE A | 1900943
SCALE - NONE | REV LTR AR | SHEET 68 OF 188

MIL 2089 - 4-65 WIR

CONDUCTOR INDIVIDUAL LENGTH NUMBER	ITEM NO.	3	FROM CUT WIRE OR SHIELD STRIP WIRE OR JACKET CIRCUIT POINT	2	TIN	3	TERMINATION SPEC. 1 ITEM NO.				NO.	TO CUT WIRE OR SHIELD STRIP WIRE OR JACKET CIRCUIT POINT	2	TIN	3	TERMINATION SPEC. 1 ITEM NO.				NO.
B 531B	41		TB19- 27	16	N		107					SHLD B 531	25	N							
B 531L			P65-F*	25	N							TB19- 26CD	16	N		107					
B 531R			P65-F	25	N							TB19- 26AB	16	N		107					
B 532	46			225		200	85			7			400		370	48	52	846			
B 532B	41		TB19- 24	16	N		107					SHLD B 532	25	N							
B 532L			P65-C*	25	N							TB19- 25CD	16	N		107					
B 532R			P65-C	25	N							TB19- 25AB	16	N		107					
B 533	46			225		200	85			7			400		370	48	52	846			
B 533B	41		TB18- 9	16	N		107					SHLD B 533	25	N							
B 533L			P65-G*	25	N							TB18- 8CD	16	N		107					
B 533R			P65-G	25	N							TB18- 8AB	16	N		107					
B 534	46			225		200	85			7			400		370	48	52	846			
B 534B	41		TB20- 18	16	N		107					SHLD B 534	25	N							
B 534L			P 9-CC	25	N							TB20- 19CD	16	N		107					
B 534R			P 9-BB	25	N							TB20- 19AB	16	N		107					
B 535	46			225		200	85			7			400		370	48	52	846			
B 535B	41		TB20- 12	16	N		107					SHLD B 535	25	N							
B 535L			P86-CC	25	N							TB20- 11CD	16	N		107					

1 THE STD CONDUCTOR TERMINATION FIGURES ARE PER
2 DIMENSIONS ARE IN INCHES AND TWO PLACE DECIMALS.

MANNED SPACECRAFT CENTER HOUSTON, TEXAS | SIZE A | 1900943
SCALE - NONE | REV LTR AR | SHEET 69 OF 188

MIL 2089 - 4-65 WIR

CONDUCTOR INDIVIDUAL LENGTH NUMBER	ITEM NO.	3	FROM CUT WIRE OR SHIELD STRIP WIRE OR JACKET CIRCUIT POINT	2	TIN	3	TERMINATION SPEC. 1 ITEM NO.				NO.	TO CUT WIRE OR SHIELD STRIP WIRE OR JACKET CIRCUIT POINT	2	TIN	3	TERMINATION SPEC. 1 ITEM NO.				NO.
B 535R			P86-BB	25	N							TB20- 11AB	16	N		107					
B 536			DELETED																		
B 536A			DELETED																		
B 536L			DELETED																		
B 536R			DELETED																		
B 537			DELETED																		
B 537A			DELETED																		
B 537L			DELETED																		
B 537R			DELETED																		
B 538	41		P82-HH	25	N							TB24- 2	20	N		111					
B 539	41		P82-JJ	25	N							TB24- 5	20	N		111					
B 540	41		P82-KK	25	N							TB24- 8	20	N		111					
B 541	42		P36-NN	25	N							TB18- 98AB	16	N		107					
B 542	42		P36-LL	25	N							TB18- 97CD	16	N		107					
B 543	178		E 80	40	N		183					TB23- 9	40	N		179					
B 544	46			225		200	85			7			400		370	48	52	846			
B 544B	41		TB18- 52	16	N		107					SHLD B 544	25	N							
B 544L			P10-X*	25	N							TB18- 53CD	16	N		107					

1 THE STD CONDUCTOR TERMINATION FIGURES ARE PER
2 DIMENSIONS ARE IN INCHES AND TWO PLACE DECIMALS.

MANNED SPACECRAFT CENTER HOUSTON, TEXAS | SIZE A | 1900943
SCALE - NONE | REV LTR AR | SHEET 70 OF 188

MIL 2089 - 4-65 WIR

CONDUCTOR INDIVIDUAL LENGTH NUMBER	ITEM NO.	3	FROM CUT WIRE OR SHIELD STRIP WIRE OR JACKET CIRCUIT POINT	2	TIN	3	TERMINATION SPEC. 1 ITEM NO.				NO.	TO CUT WIRE OR SHIELD STRIP WIRE OR JACKET CIRCUIT POINT	2	TIN	3	TERMINATION SPEC. 1 ITEM NO.				NO.
B 544R			P10-W*	25	N							TB18- 53AB	16	N		107					
B 545	46			225		200	85			7			400		370	48	52	846			
B 545B	41		TB18- 55	16	N		107					SHLD B 545	25	N							
B 545L			P10-Z*	25	N							TB18- 56CD	16	N		107					
B 545R			P10-Y*	25	N							TB18- 56AB	16	N		107					
B 546	46			225		200	85			7			400		370	48	52	846			
B 546B	41		TB18- 58	16	N		107					SHLD B 546	25	N							
B 546L			P10-CC	25	N							TB18- 57CD	16	N		107					
B 546R			P10-BB	25	N							TB18- 57AB	16	N		107					
B 547	46			225		200	85			7			400		370	48	52	846			
B 547B	41		TB18- 49	16	N		107					SHLD B 547	25	N							
B 547L			P10-EE	25	N							TB18- 50CD	16	N		107					
B 547R			P10-DD	25	N							TB18- 50AB	16	N		107					
B 548	46			225		200	85			7			400		370	48	52	846			
B 548B	41		TB18- 52	16	N		107					SHLD B 548	25	N							
B 548L			P85-Z*	25	N							TB18- 51CD	16	N		107					
B 548R			P85-Y*	25	N							TB18- 51AB	16	N		107					
B 549	46			225		200	85			7			400		370	48	52	846			

1 THE STD CONDUCTOR TERMINATION FIGURES ARE PER
2 DIMENSIONS ARE IN INCHES AND TWO PLACE DECIMALS.

MANNED SPACECRAFT CENTER HOUSTON, TEXAS | SIZE A | 1900943
SCALE - NONE | REV LTR AR | SHEET 71 OF 188

MIL 2089 - 4-65 WIR

GMI WIRING HARNESS B AR 1900943

CONDUCTOR INDIVIDUAL LENGTH NUMBER	ITEM NO.	2	FROM CUT WIRE OR SHIELD STRIP WIRE OR JACKET CIRCUIT POINT	2	T I N	2	TERMINATION SPEC. 1 ITEM NO.	NO.	TO CUT WIRE OR SHIELD STRIP WIRE OR JACKET CIRCUIT POINT	2	T I N	2	TERMINATION SPEC 1 ITEM NO.	NO.
B 549B	41		TB18- 55	16N		107			SHLD B 549	25N				
B 549L			P84-X*	25N					TB18- 54CD	16N		107		
B 549R			P84-W*	25N					TB18- 54AB	16N		107		
B 550	46			225	200	85	7			400	370	48 52 846		
B 550B	41		TB18- 61	16N		107			SHLD B 550	25N				
B 550L			P86-Z*	25N					TB18- 60CD	16N		107		
B 550R			P86-Y*	25N					TB18- 60AB	16N		107		
B 551	16		P33-A	25N					TB25- 9	40N		111		
B 552	46			225	200	85	7			400	370	48 52 846		
B 552B	41		TB17- 74	16N		107			SHLD B 552	25N				
B 552L			P85-R	25N					TB17- 73CD	16N		107		
B 552R			P85-P	25N					TB17- 73AB	16N		107		
B 553	46			225	200	85	7			400	370	48 52 846		
B 553B	41		TB17- 71	16N		107			SHLD B 553	25N				
B 553L			P85-X	25N					TB17- 70CD	16N		107		
B 553R			P85-W	25N					TB17- 70AB	16N		107		
B 554	46			225	200	85	7			400	370	48 52 846		
B 554B	41		TB17- 74	16N		107			SHLD B 554	25N				

1> THE STD CONDUCTOR TERMINATION FIGURES ARE PER
2> DIMENSIONS ARE IN INCHES AND TWO PLACE DECIMALS.

MANNED SPACECRAFT CENTER HOUSTON, TEXAS | SIZE A | 1900943
SCALE - NONE | REV LTR AR | SHEET 72 OF 188

MIL 2089 - 4-63 WIR

GMI WIRING HARNESS B AR 1900943

CONDUCTOR INDIVIDUAL LENGTH NUMBER	ITEM NO.	2	FROM CUT WIRE OR SHIELD STRIP WIRE OR JACKET CIRCUIT POINT	2	T I N	2	TERMINATION SPEC. 1 ITEM NO.	NO.	TO CUT WIRE OR SHIELD STRIP WIRE OR JACKET CIRCUIT POINT	2	T I N	2	TERMINATION SPEC 1 ITEM NO.	NO.
B 554L			P84-N	25N					TB17- 75CD	16N		107		
B 554R			P84-M	25N					TB17- 75AB	16N		107		
B 555	46			225	200	85	7			400	370	48 52 846		
B 555B	41		TB17- 80	16N		107			SHLD B 555	25N				
B 555L			P85-J*	25N					TB17- 79CD	16N		107		
B 555R			P85-H*	25N					TB17- 79AB	16N		107		
B 556	46			225	200	85	7			400	370	48 52 846		
B 556B	41		TB17- 77	16N		107			SHLD B 556	25N				
B 556L			P 9-R	25N					TB17- 76CD	16N		107		
B 556R			P 9-P	25N					TB17- 76AB	16N		107		
B 557	46			225	200	85	7			400	370	48 52 846		
B 557B	41		TB20- 72	16N		107			SHLD B 557	25N				
B 557L			P82-F	25N					TB20- 70	16N		107		
B 557R			P82-G	25N					TB20- 71	16N		107		
B 558	46			225	200	85	7			400	370	48 52 846		
B 558B	41		TB20- 80	16N		107			SHLD B 558	25N				
B 558L			P82-B	25N					TB20- 78	16N		107		
B 558R			P82-C	25N					TB20- 79	16N		107		

1> THE STD CONDUCTOR TERMINATION FIGURES ARE PER
2> DIMENSIONS ARE IN INCHES AND TWO PLACE DECIMALS.

MANNED SPACECRAFT CENTER HOUSTON, TEXAS | SIZE A | 1900943
SCALE - NONE | REV LTR AR | SHEET 73 OF 188

MIL 2089 - 4-63 WIR

GMI WIRING HARNESS B AR 1900943

CONDUCTOR INDIVIDUAL LENGTH NUMBER	ITEM NO.	2	FROM CUT WIRE OR SHIELD STRIP WIRE OR JACKET CIRCUIT POINT	2	T I N	2	TERMINATION SPEC. 1 ITEM NO.	NO.	TO CUT WIRE OR SHIELD STRIP WIRE OR JACKET CIRCUIT POINT	2	T I N	2	TERMINATION SPEC 1 ITEM NO.	NO.
B 559	46			225	200	85	7			400	370	48 52 846		
B 559B	41		TB20- 21	16N		107			SHLD B 559	25N				
B 559L			P 9-N	25N					TB20- 20CD	16N		107		
B 559R			P 9-M	25N					TB20- 20AB	16N		107		
B 560	46			225	200	85	7			400	370	48 52 846		
B 560B	41		TB18- 64	16N		107			SHLD B 560	25N				
B 560L			P10-JJ	25N					TB18- 65CD	16N		107		
B 560R			P10-HH	25N					TB18- 65AB	16N		107		
B 561	46			225	200	85	7			400	370	48 52 846		
B 561B	41		TB18- 67	16N		107			SHLD B 561	25N				
B 561L			P10-GG	25N					TB18- 68CD	16N		107		
B 561R			P10-FF	25N					TB18- 68AB	16N		107		
B 562	46			225	200	85	7			400	370	48 52 846		
B 562B	41		TB18- 67	16N		107			SHLD B 562	25N				
B 562L			P85-X*	25N					TB18- 66CD	16N		107		
B 562R			P85-W*	25N					TB18- 66AB	16N		107		
B 563	46			225	200	85	7			400	370	48 52 846		
B 563B	41		TB18- 70	16N		107			SHLD B 563	25N				

1> THE STD CONDUCTOR TERMINATION FIGURES ARE PER
2> DIMENSIONS ARE IN INCHES AND TWO PLACE DECIMALS.

MANNED SPACECRAFT CENTER HOUSTON, TEXAS | SIZE A | 1900943
SCALE - NONE | REV LTR AR | SHEET 74 OF 188

MIL 2089 - 4-63 WIR

GMI WIRING HARNESS B AR 1900943

CONDUCTOR INDIVIDUAL LENGTH NUMBER	ITEM NO.	2	FROM CUT WIRE OR SHIELD STRIP WIRE OR JACKET CIRCUIT POINT	2	T I N	2	TERMINATION SPEC. 1 ITEM NO.	NO.	TO CUT WIRE OR SHIELD STRIP WIRE OR JACKET CIRCUIT POINT	2	T I N	2	TERMINATION SPEC 1 ITEM NO.	NO.
B 563L			P84-Z*	25N					TB18- 69CD	16N		107		
B 563R			P84-Y*	25N					TB18- 69AB	16N		107		
B 564	46			225	200	85	7			400	370	48 52 846		
B 564B	41		TB18- 64	16N		107			SHLD B 564	25N				
B 564L			P 9-X*	25N					TB18- 63CD	16N		107		
B 564R			P 9-W*	25N					TB18- 63AB	16N		107		
B 565	46			225	200	85	7			400	370	48 52 846		
B 565B	41		TB18- 58	16N		107			SHLD B 565	25N				
B 565L			P 9-Z*	25N					TB18- 59CD	16N		107		
B 565R			P 9-Y*	25N					TB18- 59AB	16N		107		
B 566	46			225	200	85	7			400	370	48 52 846		
B 566B	41		TB18- 61	16N		107			SHLD B 566	25N				
B 566L			P86-X*	25N					TB18- 62CD	16N		107		
B 566R			P86-W*	25N					TB18- 62AB	16N		107		
B 567	40		P38-A	25N					TB25- 6	20N		111		
B 569	46			225	200	85	7			400	370	48 52 846		
B 569B	41		TB20- 6	16N		107			SHLD B 569	25N				
B 569L			P91-H*	25N					TB20- 8CD	16N		107		

1> THE STD CONDUCTOR TERMINATION FIGURES ARE PER
2> DIMENSIONS ARE IN INCHES AND TWO PLACE DECIMALS.

MANNED SPACECRAFT CENTER HOUSTON, TEXAS | SIZE A | 1900943
SCALE - NONE | REV LTR AR | SHEET 75 OF 188

MIL 2089 - 4-63 WIR

CONDUCTOR INDIVIDUAL LENGTH NUMBER	ITEM NO.	2>	FROM CUT WIRE OR SHIELD STRIP WIRE OR JACKET CIRCUIT POINT	2>	TIN	2>	TERMINATION SPEC. 1> ITEM NO.					NO.	TO CUT WIRE OR SHIELD STRIP WIRE OR JACKET CIRCUIT POINT	2>	TIN	2>	TERMINATION SPEC. 1> ITEM NO.					NO.
B 569R			P91-H	25	N								TB20- 8AB	16	N		107						
B 570	46			225		200	85			7				400		370	48	52	846				
B 570B	41		TB21- 6	16	N		107						SHLD B 570	25	N								
B 570L			P91-M*	25	N								TB21- 7CD	16	N		107						
B 570R			P91-M	25	N								TB21- 7AB	16	N		107						
B 571	46			225		200	85			7				400		370	48	52	846				
B 571B	41		TB21- 9	16	N		107						SHLD B 571	25	N								
B 571L			P91-P*	25	N								TB21- 8CD	16	N		107						
B 571R			P91-P	25	N								TB21- 8AB	16	N		107						
B 572	46			225		200	85			7				400		370	48	52	846				
B 572B	41		TB19- 7	16	N		107						SHLD B 572	25	N								
B 572L			P65-E*	25	N								TB19- 6CD	16	N		107						
B 572R			P65-E	25	N								TB19- 6AB	16	N		107						
B 573	46			225		200	85			7				400		370	48	52	846				
B 573B	41		TB19- 27	16	N		107						SHLD B 573	25	N								
B 573L			P65-D*	25	N								TB19- 28CD	16	N		107						
B 573R			P65-D	25	N								TB19- 28AB	16	N		107						
B 574	46			225		200	85			7				400		370	48	52	846				

1> THE STD CONDUCTOR TERMINATION FIGURES ARE PER
2> DIMENSIONS ARE IN INCHES AND TWO PLACE DECIMALS.

MANNED SPACECRAFT CENTER HOUSTON, TEXAS | SIZE A | 1900943
SCALE - NONE | REV LTR AR | SHEET 76 OF 188

MIL 2089 - 4-63 WIR

CONDUCTOR INDIVIDUAL LENGTH NUMBER	ITEM NO.	2>	FROM CUT WIRE OR SHIELD STRIP WIRE OR JACKET CIRCUIT POINT	2>	TIN	2>	TERMINATION SPEC. 1> ITEM NO.					NO.	TO CUT WIRE OR SHIELD STRIP WIRE OR JACKET CIRCUIT POINT	2>	TIN	2>	TERMINATION SPEC. 1> ITEM NO.					NO.
B 574B	41		TB17- 83	16	N		107						SHLD B 574	25	N								
B 574L			P10-E*	25	N								TB17- 84CD	16	N		107						
B 574R			P10-D*	25	N								TB17- 84AB	16	N		107						
B 575	46			225		200	85			7				400		370	48	52	846				
B 575B	41		TB17- 86	16	N		107						SHLD B 575	25	N								
B 575L			P10-G*	25	N								TB17- 85CD	16	N		107						
B 575R			P10-F*	25	N								TB17- 85AB	16	N		107						
B 576	46			225		200	85			7				400		370	48	52	846				
B 576B	41		TB17- 83	16	N		107						SHLD B 576	25	N								
B 576L			P10-J*	25	N								TB17- 82CD	16	N		107						
B 576R			P10-H*	25	N								TB17- 82AB	16	N		107						
B 577	46			225		200	85			7				400		370	48	52	846				
B 577B	41		TB17- 80	16	N		107						SHLD B 577	25	N								
B 577L			P 9-J*	25	N								TB17- 81CD	16	N		107						
B 577R			P 9-H*	25	N								TB17- 81AB	16	N		107						
B 578	46			225		200	85			7				400		370	48	52	846				
B 578B	41		TB17- 88	16	N		107						SHLD B 578	25	N								
B 578L			P83-T*	25	N								TB17- 89CD	16	N		107						

1> THE STD CONDUCTOR TERMINATION FIGURES ARE PER
2> DIMENSIONS ARE IN INCHES AND TWO PLACE DECIMALS.

MANNED SPACECRAFT CENTER HOUSTON, TEXAS | SIZE A | 1900943
SCALE - NONE | REV LTR AR | SHEET 77 OF 188

MIL 2089 - 4-63 WIR

CONDUCTOR INDIVIDUAL LENGTH NUMBER	ITEM NO.	2>	FROM CUT WIRE OR SHIELD STRIP WIRE OR JACKET CIRCUIT POINT	2>	TIN	2>	TERMINATION SPEC. 1> ITEM NO.					NO.	TO CUT WIRE OR SHIELD STRIP WIRE OR JACKET CIRCUIT POINT	2>	TIN	2>	TERMINATION SPEC. 1> ITEM NO.					NO.
B 578R			P83-S*	25	N								TB17- 89AB	16	N		107						
B 579	40		P18-A	25	N								TB25- 1	20	N		111						
B 580	46			225		200	85			7				400		370	48	52	846				
B 580B	41		TB20- 36	16	N		107						SHLD B 580	25	N								
B 580L			P85-CC	25	N								TB20- 37CD	16	N		107						
B 580R			P85-BB	25	N								TB20- 37AB	16	N		107						
B 581	46			225		200	85			7				400		370	48	52	846				
B 581B	41		TB20- 39	16	N		107						SHLD B 581	25	N								
B 581L			P84-CC	25	N								TB20- 38CD	16	N		107						
B 581R			P84-BB	25	N								TB20- 38AB	16	N		107						
B 582	46			225		200	85			7				400		370	48	52	846				
B 582B	41		TB20- 36	16	N		107						SHLD B 582	25	N								
B 582L			P83-CC	25	N								TB20- 35CD	16	N		107						
B 582R			P83-BB	25	N								TB20- 35AB	16	N		107						
B 583	46			225		200	85			7				400		370	48	52	846				
B 583B	41		TB19- 36	16	N		107						SHLD B 583	25	N								
B 583L			P86-G*	25	N								TB19- 40CD	16	N		107						
B 583R			P86-F*	25	N								TB19- 51AB	16	N		107						

1> THE STD CONDUCTOR TERMINATION FIGURES ARE PER
2> DIMENSIONS ARE IN INCHES AND TWO PLACE DECIMALS.

MANNED SPACECRAFT CENTER HOUSTON, TEXAS | SIZE A | 1900943
SCALE - NONE | REV LTR AR | SHEET 78 OF 188

MIL 2089 - 4-63 WIR

CONDUCTOR INDIVIDUAL LENGTH NUMBER	ITEM NO.	2>	FROM CUT WIRE OR SHIELD STRIP WIRE OR JACKET CIRCUIT POINT	2>	TIN	2>	TERMINATION SPEC. 1> ITEM NO.					NO.	TO CUT WIRE OR SHIELD STRIP WIRE OR JACKET CIRCUIT POINT	2>	TIN	2>	TERMINATION SPEC. 1> ITEM NO.					NO.
B 584	46			225		200	85			7				400		370	48	52	846				
B 584B	41		TB20- 15	16	N		107						SHLD B 584	25	N								
B 584L			P35-M	25	N								TB20- 20CD	16	N		107						
B 584R			P35-N	25	N								TB20- 20AB	16	N		107						
B 585	42		P64-CC	25	N								TB20- 14AB	16	N		107						
B 586	46			225		200	85			7				400		370	48	52	846				
B 586B	41		TB18- 75	16	N		107						SHLD B 586	25	N								
B 586L			P 9-JJ	25	N								TB18- 74CD	16	N		107						
B 586R			P 9-HH	25	N								TB18- 74AB	16	N		107						
B 587	46			225		200	85			7				400		370	48	52	846				
B 587B	41		TB18- 78	16	N		107						SHLD B 587	25	N								
B 587L			P86-JJ	25	N								TB18- 76	16	N		107						
B 587R			P86-HH	25	N								TB18- 77	16	N		107						
B 588	42		P34-T	25	N								TB17- 2AB	16	N		107						
B 589	65			225		200	86	87	856					225		200	86	87	856				
B 589A	41		SHLD B 589	25	N								TB27- 6B	16	N		107						
B 589B	41		P14-G	25	N								SHLD B 589	25	N								
B 589E			TB27- 5B	16	N		107						P14-F	25	N								

1> THE STD CONDUCTOR TERMINATION FIGURES ARE PER
2> DIMENSIONS ARE IN INCHES AND TWO PLACE DECIMALS.

MANNED SPACECRAFT CENTER HOUSTON, TEXAS | SIZE A | 1900943
SCALE - NONE | REV LTR AR | SHEET 79 OF 188

MIL 2089 - 4-63 WIR

CONDUCTOR NUMBER	INDIVIDUAL LENGTH ITEM NO.	2	FROM CUT WIRE OR SHIELD STRIP WIRE OR JACKET CIRCUIT POINT	2	TIN	2	TERMINATION SPEC. 1 ITEM NO.					NO.	TO CUT WIRE OR SHIELD STRIP WIRE OR JACKET CIRCUIT POINT	2	TIN	2	TERMINATION SPEC 1 ITEM NO.					NO.
B 590	65			225			200	86	87	856				225			200	86	87	856			
B 590A	41		SHLD B 590	25N									TB27- 6C	16N			107						
B 590B	41		P14-C*	25N									SHLD B 590	25N									
B 590E			TB27- 5C	16N			107						P14-D*	25N									
B 591	42		P40-N	25N									P65-AA	25N									
B 592	42		P40-P	25N									P65-BB	25N									
B 594	42		P40-S	25N									P63-A*	25N									
B 595	42		P40-T	25N									P63-B*	25N									
B 596	42		P40-U	25N									P63-C*	25N									
B 597	42		P40-V	25N									P63-D*	25N									
B 598	42		P40-W	25N									P63-E*	25N									
B 599	42		P40-X	25N									P63-F*	25N									
B 600	42		P40-Y	25N									P63-G*	25N									
B 601	42		P40-Z	25N									P63-H*	25N									
B 602	42		P40-A*	25N									P63-I*	25N									
B 603	42		P40-C*	25N									P63-Z	25N									
B 604	42		P40-D*	25N									P63-Y	25N									
B 605	42		P40-E*	25N									P63-X	25N									

1> THE STD CONDUCTOR TERMINATION FIGURES ARE PER
2> DIMENSIONS ARE IN INCHES AND TWO PLACE DECIMALS.

MANNED SPACECRAFT CENTER HOUSTON, TEXAS | SIZE A | 1900943
SCALE - NONE | REV LTR AR | SHEET 80 OF 188

MIL 2089 - 4-63 WIN

CONDUCTOR NUMBER	INDIVIDUAL LENGTH ITEM NO.	2	FROM CUT WIRE OR SHIELD STRIP WIRE OR JACKET CIRCUIT POINT	2	TIN	2	TERMINATION SPEC. 1 ITEM NO.					NO.	TO CUT WIRE OR SHIELD STRIP WIRE OR JACKET CIRCUIT POINT	2	TIN	2	TERMINATION SPEC 1 ITEM NO.					NO.
B 606	42		P40-F*	25N									P63-W	25N									
B 607	42		P40-G*	25N									P63-V	25N									
B 608	42		P40-H*	25N									P63-U	25N									
B 609	42		P40-I*	25N									P63-T	25N									
B 610	42		P40-J*	25N									P63-S	25N									
B 611	42		P40-K*	25N									P63-R	25N									
B 612	42		P40-M*	25N									P65-CC	25N									
B 613	42		P39-A	25N									P64-B	25N									
B 614	42		P39-B	25N									P64-C	25N									
B 615	42		P39-S	25N									P64-U	25N									
B 616	42		P39-T	25N									P64-V	25N									
B 617	42		P39-C	25N									P64-N	25N									
B 618	42		P39-D	25N									P64-D	25N									
B 619	42		P39-E	25N									P64-E	25N									
B 620	42		P39-F	25N									P64-F	25N									
B 621	42		P39-G	25N									P64-G	25N									
B 622	42		P39-H	25N									P64-H	25N									
B 623	42		P39-J	25N									P64-J	25N									

1> THE STD CONDUCTOR TERMINATION FIGURES ARE PER
2> DIMENSIONS ARE IN INCHES AND TWO PLACE DECIMALS.

MANNED SPACECRAFT CENTER HOUSTON, TEXAS | SIZE A | 1900943
SCALE - NONE | REV LTR AR | SHEET 81 OF 188

MIL 2089 - 4-63 WIN

CONDUCTOR NUMBER	INDIVIDUAL LENGTH ITEM NO.	2	FROM CUT WIRE OR SHIELD STRIP WIRE OR JACKET CIRCUIT POINT	2	TIN	2	TERMINATION SPEC. 1 ITEM NO.					NO.	TO CUT WIRE OR SHIELD STRIP WIRE OR JACKET CIRCUIT POINT	2	TIN	2	TERMINATION SPEC 1 ITEM NO.					NO.
B 624	42		P39-K	25N									P64-K	25N									
B 625	42		P39-L	25N									P64-L	25N									
B 626	42		P39-M	25N									P64-M	25N									
B 627	42		P39-N	25N									P64-P	25N									
B 628	42		P39-P	25N									P64-W	25N									
B 629	42		P39-R	25N									P64-X	25N									
B 630	42		P39-U	25N									P64-H*	25N									
B 631	42		P39-V	25N									P64-Y	25N									
B 632	42		P39-W	25N									P64-Z	25N									
B 633	42		P39-X	25N									P64-A*	25N									
B 634	42		P39-Y	25N									P64-B*	25N									
B 635	42		P39-Z	25N									P64-C*	25N									
B 636	42		P39-A*	25N									P64-D*	25N									
B 637	42		P39-B*	25N									P64-E*	25N									
B 638	42		P39-C*	25N									P64-F*	25N									
B 639	42		P39-D*	25N									P64-G*	25N									
B 640	42		P39-E*	25N									P64-I*	25N									
B 641	42		P39-F*	25N									P64-U*	25N									

1> THE STD CONDUCTOR TERMINATION FIGURES ARE PER
2> DIMENSIONS ARE IN INCHES AND TWO PLACE DECIMALS.

MANNED SPACECRAFT CENTER HOUSTON, TEXAS | SIZE A | 1900943
SCALE - NONE | REV LTR AR | SHEET 82 OF 188

MIL 2089 - 4-63 WIN

CONDUCTOR NUMBER	INDIVIDUAL LENGTH ITEM NO.	2	FROM CUT WIRE OR SHIELD STRIP WIRE OR JACKET CIRCUIT POINT	2	TIN	2	TERMINATION SPEC. 1 ITEM NO.					NO.	TO CUT WIRE OR SHIELD STRIP WIRE OR JACKET CIRCUIT POINT	2	TIN	2	TERMINATION SPEC 1 ITEM NO.					NO.
B 642	42		P39-G*	25N									P64-T*	25N									
B 643	42		P39-H*	25N									P64-S*	25N									
B 644	42		P39-I*	25N									P64-R*	25N									
B 645	42		P39-J*	25N									P64-Q*	25N									
B 646	42		P39-K*	25N									P64-P*	25N									
B 647	42		P39-M*	25N									P64-N*	25N									
B 648	42		P39-N*	25N									P64-M*	25N									
B 651	42		P40-T*	25N									P64-R	25N									
B 652	16		P38-F	25N									P63-X*	25N									
B 653	16		P38-G	25N									P63-Y*	25N									
B 654	16		P38-H	25N									P63-W*	25N									
B 655	46			225			200	85		7				400		370	48	52	8446				
B 655B	41		TB17- 91	16N				107					SHLD B 655	25N									
B 655L			P83-G*	25N									TB17- 90CD	16N			107						
B 655R			P83-F*	25N									TB17- 90AB	16N			107						
B 656	46			225			200	85		7				400		370	48	52	8446				
B 656B	41		TB17- 91	16N				107					SHLD B 656	25N									
B 656L			P86-T*	25N									TB17- 92CD	16N			107						

1> THE STD CONDUCTOR TERMINATION FIGURES ARE PER
2> DIMENSIONS ARE IN INCHES AND TWO PLACE DECIMALS.

MANNED SPACECRAFT CENTER HOUSTON, TEXAS | SIZE A | 1900943
SCALE - NONE | REV LTR AR | SHEET 83 OF 188

MIL 2089 - 4-63 WIN

CONDUCTOR NUMBER	INDIVIDUAL LENGTH ITEM NO.	2	FROM CUT WIRE OR SHIELD STRIP WIRE OR JACKET CIRCUIT POINT	2	T I N	2	TERMINATION SPEC. 1 ITEM NO.	NO.	TO CUT WIRE OR SHIELD STRIP WIRE OR JACKET CIRCUIT POINT	2	T I N	2	TERMINATION SPEC 1 ITEM NO.	NO.
B 656R			P86-S*	25N					TB17- 92AB	16N			107	
B 657	40		P 2-A	25N					TB25- 3	20N			111	
B 658	40		P50-A	25N					TB25- 3	20N			111	
B 659	42		P36-CC	25N					P25-A*	25N				
B 660	42		P36-Z*	25N					P24-T*	25N				
B 661	42		P36-H*	25N					P24-I*	25N				
B 662	178		TB25- 14	40N			179		E 1	40N			179	
B 663	46			225		200	48 52 846			400		370	48 52 846	
B 663B	41		TB18- 81	16N			107		SHLD B 663	25N				
B 663L			P85-T*	25N					TB18- 82CD	16N			107	
B 663R			P85-S*	25N					TB18- 82AB	16N			107	
B 664	46			225		200	85	7		400		370	48 52 846	
B 664B	41		TB18- 84	16N			107		SHLD B 664	25N				
B 664L			P10-R*	25N					TB18- 85CD	16N			107	
B 664R			P10-P*	25N					TB18- 85AB	16N			107	
B 665	46			225		200	85	7		400		370	48 52 846	
B 665B	41		TB18- 87	16N			107		SHLD B 665	25N				
B 665L			P10-T*	25N					TB18- 86CD	16N			107	

1> THE STD CONDUCTOR TERMINATION FIGURES ARE PER
2> DIMENSIONS ARE IN INCHES AND TWO PLACE DECIMALS.

MANNED SPACECRAFT CENTER HOUSTON, TEXAS | SIZE A | 1900943
SCALE - NONE | REV LTR AR | SHEET 84 OF 188

MIL 2049 - 4-65 WIR

CONDUCTOR NUMBER	INDIVIDUAL LENGTH ITEM NO.	2	FROM CUT WIRE OR SHIELD STRIP WIRE OR JACKET CIRCUIT POINT	2	T I N	2	TERMINATION SPEC. 1 ITEM NO.	NO.	TO CUT WIRE OR SHIELD STRIP WIRE OR JACKET CIRCUIT POINT	2	T I N	2	TERMINATION SPEC 1 ITEM NO.	NO.
B 665R			P10-S*	25N					TB18- 86AB	16N			107	
B 666	46			225		200	85	7		400		370	48 52 846	
B 666B	41		TB18- 84	16N			107		SHLD B 666	25N				
B 666L			P84-R*	25N					TB18- 83CD	16N			107	
B 666R			P84-P*	25N					TB18- 83AB	16N			107	
B 667	46			225		200	85	7		400		370	48 52 846	
B 667B	41		TB18- 90	16N			107		SHLD B 667	25N				
B 667L			P83-C*	25N					TB18- 89CD	16N			107	
B 667R			P83-B*	25N					TB18- 89AB	16N			107	
B 668	46			225		200	85	7		400		370	48 52 846	
B 668B	41		TB18- 87	16N			107		SHLD B 668	25N				
B 668L			P83-N*	25N					TB18- 88CD	16N			107	
B 668R			P83-M*	25N					TB18- 88AB	16N			107	
B 669	46			225		200	48 52 845			225		200	85	7
B 669A	41		SHLD B 669	25N					E 38	25N				
B 669L			P65-K*	25N					P46-C	25N				
B 669R			P65-K	25N					P46-B	25N				
B 670	42		P63-AA	25N					P47-U	25N				

1> THE STD CONDUCTOR TERMINATION FIGURES ARE PER
2> DIMENSIONS ARE IN INCHES AND TWO PLACE DECIMALS.

MANNED SPACECRAFT CENTER HOUSTON, TEXAS | SIZE A | 1900943
SCALE - NONE | REV LTR AR | SHEET 85 OF 188

MIL 2049 - 4-65 WIR

CONDUCTOR NUMBER	INDIVIDUAL LENGTH ITEM NO.	2	FROM CUT WIRE OR SHIELD STRIP WIRE OR JACKET CIRCUIT POINT	2	T I N	2	TERMINATION SPEC. 1 ITEM NO.	NO.	TO CUT WIRE OR SHIELD STRIP WIRE OR JACKET CIRCUIT POINT	2	T I N	2	TERMINATION SPEC 1 ITEM NO.	NO.
B 671	42		P63-Z*	25N					P47-Y	25N				
B 672	42		P63-BB	25N					P47-T	25N				
B 673	42		P92-V	25N					P24-Z*	25N				
B 674	42		P92-U	25N					P24-Y*	25N				
B 675	42		P92-T	25N					P24-X*	25N				
B 676	42		P92-R	25N					P24-BB	25N				
B 677	42		P92-S	25N					P24-AA	25N				
B 678	42		P96-A*	25N					P24-W*	25N				
B 679	42		P96-B*	25N					P24-V*	25N				
B 680	42		P96-C*	25N					P24-U*	25N				
B 681	42		P92-D	25N					P24-G*	25N				
B 682	42		P92-X	25N					P24-JJ	25N				
B 683	42		P34-B*	25N					TB20- 40AB	16N			107	
B 684	42		P34-C*	25N					TB20- 40CD	16N			107	
B 685	65			52		23	90 91	7		225		200	86 87 856	
B 685B	41		TB22- 37CD	16N			107		SHLD B 685	25N				
B 685E			P66-G1	11N			89		TB22- 37AB	16N			107	
B 685X			P66-G2						SHLD B 685					

1> THE STD CONDUCTOR TERMINATION FIGURES ARE PER
2> DIMENSIONS ARE IN INCHES AND TWO PLACE DECIMALS.

MANNED SPACECRAFT CENTER HOUSTON, TEXAS | SIZE A | 1900943
SCALE - NONE | REV LTR AR | SHEET 86 OF 188

MIL 2049 - 4-65 WIR

CONDUCTOR NUMBER	INDIVIDUAL LENGTH ITEM NO.	2	FROM CUT WIRE OR SHIELD STRIP WIRE OR JACKET CIRCUIT POINT	2	T I N	2	TERMINATION SPEC. 1 ITEM NO.	NO.	TO CUT WIRE OR SHIELD STRIP WIRE OR JACKET CIRCUIT POINT	2	T I N	2	TERMINATION SPEC 1 ITEM NO.	NO.
B 686	46			225		200	85	7		400		370	48 52 846	
B 686B	41		TB20- 49	16N			107		SHLD B 686	25N				
B 686L			P10-L	25N					TB20- 50CD	16N			107	
B 686R			P10-K	25N					TB20- 50AB	16N			107	
B 687	46			225		200	85	7		400		370	48 52 846	
B 687B	41		TB20- 52	16N			107		SHLD B 687	25N				
B 687L			P10-X	25N					TB20- 53CD	16N			107	
B 687R			P10-W	25N					TB20- 53AB	16N			107	
B 688	46			225		200	85	7		400		370	48 52 846	
B 688B	41		TB20- 55	16N			107		SHLD B 688	25N				
B 688L			P85-L	25N					TB20- 56CD	16N			107	
B 688R			P85-K	25N					TB20- 56AB	16N			107	
B 692	46			225		200	85	7		400		370	48 52 846	
B 692B	41		TB20- 58	16N			107		SHLD B 692	25N				
B 692L			P86-X	25N					TB20- 59CD	16N			107	
B 692R			P86-W	25N					TB20- 59AB	16N			107	
B 693			DELETED											
B 693B			DELETED											

1> THE STD CONDUCTOR TERMINATION FIGURES ARE PER
2> DIMENSIONS ARE IN INCHES AND TWO PLACE DECIMALS.

MANNED SPACECRAFT CENTER HOUSTON, TEXAS | SIZE A | 1900943
SCALE - NONE | REV LTR AR | SHEET 87 OF 188

MIL 2049 - 4-65 WIR

CONDUCTOR INDIVIDUAL LENGTH NUMBER	ITEM NO.	2	FROM CUT WIRE OR SHIELD STRIP WIRE OR JACKET CIRCUIT POINT	2	T I N	2	TERMINATION SPEC. 1 ITEM NO.				NO.	TO CUT WIRE OR SHIELD STRIP WIRE OR JACKET CIRCUIT POINT	2	T I N	2	TERMINATION SPEC. 1 ITEM NO.				NO.
B 693L			DELETED																		
B 693R			DELETED																		
B 694			DELETED																		
B 694B			DELETED																		
B 694L			DELETED																		
B 694R			DELETED																		
B 695			DELETED																		
B 695B			DELETED																		
B 695L			DELETED																		
B 695R			DELETED																		
B 696	65			52		23	90	91		7			225		200	86	87	856			
B 696B	41		P26-S	25N								SHLD B 696	25N								
B 696E			P93-F1	11N			89					P26-R	25N								
B 696X			P93-F2									SHLD B 696									
B 697	65			50		31				7			52		23	90	91		7		
B 697E			P56-H	11Y								P62-H1	11N			89					
B 697X			P56-L									P62-H2									
B 698	65			50		31				7			52		23	90	91		7		

1> THE STD CONDUCTOR TERMINATION FIGURES ARE PER
2> DIMENSIONS ARE IN INCHES AND TWO PLACE DECIMALS.

MANNED SPACECRAFT CENTER HOUSTON, TEXAS | SIZE A | 1900943
SCALE-NONE | REV LTR AR | SHEET 88 OF 188

MIL 2089 - 4 85 WIR

CONDUCTOR INDIVIDUAL LENGTH NUMBER	ITEM NO.	2	FROM CUT WIRE OR SHIELD STRIP WIRE OR JACKET CIRCUIT POINT	2	T I N	2	TERMINATION SPEC. 1 ITEM NO.				NO.	TO CUT WIRE OR SHIELD STRIP WIRE OR JACKET CIRCUIT POINT	2	T I N	2	TERMINATION SPEC. 1 ITEM NO.				NO.
B 698E			P55-H		11Y							P62-J1		11N			89				
B 698X			P55-L									P62-J2									
B 700B	41		TB22- 21		16N		107					SHLD B 700		25N							
B 700L			P85-T		25N							TB22- 22CD		16N			107				
B 700R			P85-S		25N							TB22- 22AB		16N			107				
B 701	46				225		200	85		7				400		370	48	52	846		
B 701B	41		TB18- 96		16N		107					SHLD B 701		25N							
B 701L			P85-N*		25N							TB18- 95CD		16N			107				
B 701R			P85-M*		25N							TB18- 95AB		16N			107				
B 702	46				225		200	85		7				400		370	48	52	846		
B 702B	41		TB22- 21		16N		107					SHLD B 702		25N							
B 702L			P84-T		25N							TB22- 20CD		16N			107				
B 702R			P84-S		25N							TB22- 20AB		16N			107				
B 703	46				225		200	85		7				400		370	48	52	846		
B 703B	41		TB18- 93		16N		107					SHLD B 703		25N							
B 703L			P84-N*		25N							TB18- 94CD		16N			107				
B 703R			P84-M*		25N							TB18- 94AB		16N			107				
B 704	46				225		200	85		7				400		370	48	52	846		

1> THE STD CONDUCTOR TERMINATION FIGURES ARE PER
2> DIMENSIONS ARE IN INCHES AND TWO PLACE DECIMALS.

MANNED SPACECRAFT CENTER HOUSTON, TEXAS | SIZE A | 1900943
SCALE-NONE | REV LTR AR | SHEET 89 OF 188

MIL 2089 - 4 85 WIR

CONDUCTOR INDIVIDUAL LENGTH NUMBER	ITEM NO.	2	FROM CUT WIRE OR SHIELD STRIP WIRE OR JACKET CIRCUIT POINT	2	T I N	2	TERMINATION SPEC. 1 ITEM NO.				NO.	TO CUT WIRE OR SHIELD STRIP WIRE OR JACKET CIRCUIT POINT	2	T I N	2	TERMINATION SPEC. 1 ITEM NO.				NO.
B 704B	41		TB22- 30		16N		107					SHLD B 704		25N							
B 704L			P84-G		25N							TB22- 29CD		16N			107				
B 704R			P84-F		25N							TB22- 29AB		16N			107				
B 705	46				225		200	85		7				400		370	48	52	846		
B 705B	41		TB22- 24		16N		107					SHLD B 705		25N							
B 705L			P 9-V		25N							TB22- 25CD		16N			107				
B 705R			P 9-U		25N							TB22- 25AB		16N			107				
B 706	46				225		200	85		7				400		370	48	52	846		
B 706B	41		TB18- 93		16N		107					SHLD B 706		25N							
B 706L			P 9-N*		25N							TB18- 92CD		16N			107				
B 706R			P 9-M*		25N							TB18- 92AB		16N			107				
B 707	46				225		200	85		7				400		370	48	52	846		
B 707B	41		TB22- 27		16N		107					SHLD B 707		25N							
B 707L			P 9-G		25N							TB22- 28CD		16N			107				
B 707R			P 9-F		25N							TB22- 28AB		16N			107				
B 708	46				225		200	85		7				400		370	48	52	846		
B 708B	41		TB22- 27		16N		107					SHLD B 708		25N							
B 708L			P86-G		25N							TB22- 26CD		16N			107				

1> THE STD CONDUCTOR TERMINATION FIGURES ARE PER
2> DIMENSIONS ARE IN INCHES AND TWO PLACE DECIMALS.

MANNED SPACECRAFT CENTER HOUSTON, TEXAS | SIZE A | 1900943
SCALE-NONE | REV LTR AR | SHEET 90 OF 188

MIL 2089 - 4 85 WIR

CONDUCTOR INDIVIDUAL LENGTH NUMBER	ITEM NO.	2	FROM CUT WIRE OR SHIELD STRIP WIRE OR JACKET CIRCUIT POINT	2	T I N	2	TERMINATION SPEC. 1 ITEM NO.				NO.	TO CUT WIRE OR SHIELD STRIP WIRE OR JACKET CIRCUIT POINT	2	T I N	2	TERMINATION SPEC. 1 ITEM NO.				NO.
B 708R			P86-F		25N							TB22- 26AB		16N			107				
B 709	46				225		200	85		7				400		370	48	52	846		
B 709B	41		TB22- 24		16N		107					SHLD B 709		25N							
B 709L			P86-V		25N							TB22- 25CD		16N			107				
B 709R			P86-U		25N							TB22- 23AB		16N			107				
B 710	46				225		200	85		7				400		370	48	52	846		
B 710B	41		TB18- 90		16N		107					SHLD B 710		25N							
B 710L			P86-N*		25N							TB18- 91CD		16N			107				
B 710R			P86-M*		25N							TB18- 91AB		16N			107				
B 711	65				52		23	90	91		7			52		23	90	91		7	
B 711E			P93-B1		11N			89				P 7-D0H		11N			89				
B 711X			P93-B2									P 7-D0L									
B 712	42		P64-GG		25N							P 5-K*		25N							
B 713	65				225		200	86	87	856				52		23	90	91		7	
B 713A	41		SHLD B 713		25N							P63-CC		25N							
B 713E			P63-DD		25N							P 7-F0H		11N			89				
B 713X			SHLD B 713									P 7-F0L									
B 714	65				52		23	90	91		7			52		23	90	91		7	

1> THE STD CONDUCTOR TERMINATION FIGURES ARE PER
2> DIMENSIONS ARE IN INCHES AND TWO PLACE DECIMALS.

MANNED SPACECRAFT CENTER HOUSTON, TEXAS | SIZE A | 1900943
SCALE-NONE | REV LTR AR | SHEET 91 OF 188

MIL 2089 - 4 85 WIR

CONDUCTOR INDIVIDUAL LENGTH NUMBER	ITEM NO.	2>	FROM CUT WIRE OR SHIELD STRIP WIRE OR JACKET CIRCUIT POINT	3>	T I N	2>	TERMINATION SPEC. 1> ITEM NO.					NO.	TO CUT WIRE OR SHIELD STRIP WIRE OR JACKET CIRCUIT POINT	3>	T I N	2>	TERMINATION SPEC. 1> ITEM NO.					NO.
B 714E			P69-A1	11	N		89						P 7-A0H	11	N		89						
B 714X			P69-A2										P 7-A0L										
B 715	65			52		23	90	91		7				52		23	90	91		7			
B 715E			P93-A1	11	N		89						P 7-B0H	11	N		89						
B 715X			P93-A2										P 7-B0L										
B 716	42		P64-V*	25	N								P 5-FF	25	N								
B 717	42		P64-W*	25	N								P 5-CC	25	N								
B 718	42		P64-X*	25	N								P 5-DD	25	N								
B 719	42		P64-Y*	25	N								P 5-W*	25	N								
B 720	42		P64-Z*	25	N								P 5-Y*	25	N								
B 721	42		P64-AA	25	N								P 5-AA	25	N								
B 722	42		P36-FF	25	N								TB20- 8AB	16	N		107						
B 723	42		P36-KK	25	N								TB21- 8AB	16	N		107						
B 724	42		P36-HH	25	N								TB21- 7AB	16	N		107						
B 725	41		P82-P	25	N								J 3-H*	25	N								
B 726	41		P82-R	25	N								J 3-Z*	25	N								
B 727	41		P82-S	25	N								J 3-Y*	25	N								
B 728	41		P82-T	25	N								J 3-X*	25	N								

1> THE STD CONDUCTOR TERMINATION FIGURES ARE PER
2> DIMENSIONS ARE IN INCHES AND TWO PLACE DECIMALS.

MANNED SPACECRAFT CENTER HOUSTON, TEXAS | SIZE A | 1900943
SCALE - NONE | REV LTR AR | SHEET 92 OF 188

MIL 2569 - 2-65 WIR

CONDUCTOR INDIVIDUAL LENGTH NUMBER	ITEM NO.	2>	FROM CUT WIRE OR SHIELD STRIP WIRE OR JACKET CIRCUIT POINT	3>	T I N	2>	TERMINATION SPEC. 1> ITEM NO.					NO.	TO CUT WIRE OR SHIELD STRIP WIRE OR JACKET CIRCUIT POINT	3>	T I N	2>	TERMINATION SPEC. 1> ITEM NO.					NO.
B 729	41		P82-U	25	N								J 3-J*	25	N								
B 730	41		P82-V	25	N								J 3-I*	25	N								
B 731	41		P82-W	25	N								J 3-H*	25	N								
B 732	41		P82-X	25	N								J 3-G*	25	N								
B 734	46			225		200	85			7				400		370	48	52	846				
B 734B	41		TB20- 67	16	N		107						SHLD B 734	25	N								
B 734L			P85-V	25	N								TB20- 66CD	16	N		107						
B 734R			P85-U	25	N								TB20- 66AB	16	N		107						
B 735	46			225		200	85			7				400		370	48	52	846				
B 735B	41		TB20- 64	16	N		107						SHLD B 735	25	N								
B 735L			P84-X	25	N								TB20- 65CD	16	N		107						
B 735R			P84-W	25	N								TB20- 65AB	16	N		107						
B 736	46			225		200	85			7				400		370	48	52	846				
B 736B	41		TB20- 61	16	N		107						SHLD B 736	25	N								
B 736L			P 9-X	25	N								TB20- 62CD	16	N		107						
B 736R			P 9-W	25	N								TB20- 62AB	16	N		107						
B 737	46			225		200	85			7				400		370	48	52	846				
B 737B	41		TB20- 61	16	N		107						SHLD B 737	25	N								

1> THE STD CONDUCTOR TERMINATION FIGURES ARE PER
2> DIMENSIONS ARE IN INCHES AND TWO PLACE DECIMALS.

MANNED SPACECRAFT CENTER HOUSTON, TEXAS | SIZE A | 1900943
SCALE - NONE | REV LTR AR | SHEET 93 OF 188

MIL 2569 - 2-65 WIR

CONDUCTOR INDIVIDUAL LENGTH NUMBER	ITEM NO.	2>	FROM CUT WIRE OR SHIELD STRIP WIRE OR JACKET CIRCUIT POINT	3>	T I N	2>	TERMINATION SPEC. 1> ITEM NO.					NO.	TO CUT WIRE OR SHIELD STRIP WIRE OR JACKET CIRCUIT POINT	3>	T I N	2>	TERMINATION SPEC. 1> ITEM NO.					NO.
B 737L			P83-X	25	N								TB20- 60CD	16	N		107						
B 737R			P83-W	25	N								TB20- 60AB	16	N		107						
B 738	41		TB23- 10	20	N		111						P16-T*	25	N								
B 739	41		TB23- 10	20	N		111						P15-T*	25	N								
B 740	41		TB23- 10	20	N		111						P14-T*	25	N								
B 741	41		TB23- 11	20	N		111						P17-T*	25	N								
B 742	46			225		200	85			7				400		370	48	52	846				
B 742B	41		TB19- 82	16	N		107						SHLD B 742	25	N								
B 742L			P85-N	25	N								TB19- 83CD	16	N		107						
B 742R			P85-M	25	N								TB19- 83AB	16	N		107						
B 743	46			225		200	85			7				400		370	48	52	846				
B 743B	41		TB19- 85	16	N		107						SHLD B 743	25	N								
B 743L			P85-E*	25	N								TB19- 86CD	16	N		107						
B 743R			P85-D*	25	N								TB19- 86AB	16	N		107						
B 744	46			225		200	85			7				400		370	48	52	846				
B 744B	41		TB19- 88	16	N		107						SHLD B 744	25	N								
B 744L			P85-G*	25	N								TB19- 87CD	16	N		107						
B 744R			P85-F*	25	N								TB19- 87AB	16	N		107						

1> THE STD CONDUCTOR TERMINATION FIGURES ARE PER
2> DIMENSIONS ARE IN INCHES AND TWO PLACE DECIMALS.

MANNED SPACECRAFT CENTER HOUSTON, TEXAS | SIZE A | 1900943
SCALE - NONE | REV LTR AR | SHEET 94 OF 188

MIL 2569 - 2-65 WIR

CONDUCTOR INDIVIDUAL LENGTH NUMBER	ITEM NO.	2>	FROM CUT WIRE OR SHIELD STRIP WIRE OR JACKET CIRCUIT POINT	3>	T I N	2>	TERMINATION SPEC. 1> ITEM NO.					NO.	TO CUT WIRE OR SHIELD STRIP WIRE OR JACKET CIRCUIT POINT	3>	T I N	2>	TERMINATION SPEC. 1> ITEM NO.					NO.
B 746	46			225		200	85			7				400		370	48	52	846				
B 746B	41		TB19- 85	16	N		107						SHLD B 746	25	N								
B 746L			P 9-R*	25	N								TB19- 84CD	16	N		107						
B 746R			P 9-P*	25	N								TB19- 84AB	16	N		107						
B 747	46			225		200	85			7				400		370	48	52	846				
B 747B	41		TB19- 88	16	N		107						SHLD B 747	25	N								
B 747L			P83-EE	25	N								TB19- 89CD	16	N		107						
B 747R			P83-DD	25	N								TB19- 89AB	16	N		107						
B 748	46			225		200	85			7				400		370	48	52	846				
B 748B	41		TB22- 30	16	N		107						SHLD B 748	25	N								
B 748L			P84-C	25	N								TB22- 31CD	16	N		107						
B 748R			P84-B	25	N								TB22- 31AB	16	N		107						
B 749	46			225		200	85			7				400		370	48	52	846				
B 749B	41		TB22- 33	16	N		107						SHLD B 749	25	N								
B 749L			P 9-C	25	N								TB22- 32CD	16	N		107						
B 749R			P 9-B	25	N								TB22- 32AB	16	N		107						
B 750	46			225		200	85			7				400		370	48	52	846				
B 750B	41		TB22- 33	16	N		107						SHLD B 750	25	N								

1> THE STD CONDUCTOR TERMINATION FIGURES ARE PER
2> DIMENSIONS ARE IN INCHES AND TWO PLACE DECIMALS.

MANNED SPACECRAFT CENTER HOUSTON, TEXAS | SIZE A | 1900943
SCALE - NONE | REV LTR AR | SHEET 95 OF 188

MIL 2569 - 2-65 WIR

CONDUCTOR INDIVIDUAL LENGTH NUMBER	ITEM NO.	2	FROM CUT WIRE OR SHIELD STRIP WIRE OR JACKET CIRCUIT POINT	2	T I N	2	TERMINATION SPEC. ITEM NO.	1	NO.	TO CUT WIRE OR SHIELD STRIP WIRE OR JACKET CIRCUIT POINT	2	T I N	2	TERMINATION SPEC. ITEM NO.	1	NO.
B 750L			P86-C	25	N					TB22- 34CD	16	N		107		
B 750R			P86-B	25	N					TB22- 34AB	16	N		107		
B 751	46			225		200	85	7			400		370	48 52 846		
B 751B	41		TB22- 39	16	N		107			SHLD B 751	25	N				
B 751L			P86-J	25	N					TB22- 38CD	16	N		107		
B 751R			P86-H	25	N					TB22- 38AB	16	N		107		
B 753	42		P96-Y	25	N					TB21- 5CD	16	N		107		
B 754	46			225		200	85	7			400		370	48 52 846		
B 754B	41		TB21- 49	16	N		107			SHLD B 754	25	N				
B 754L			P84-C*	25	N					TB21- 50	16	N		107		
B 754R			P84-B*	25	N					TB21- 51	16	N		107		
B 755	46			225		200	85	7			400		370	48 52 846		
B 755B	41		TB21- 55	16	N		107			SHLD B 755	25	N				
B 755L			P 9-C*	25	N					TB21- 53	16	N		107		
B 755R			P 9-B*	25	N					TB21- 54	16	N		107		
B 756	46			225		200	85	7			400		370	48 52 846		
B 756B	41		TB21- 55	16	N		107			SHLD B 756	25	N				
B 756L			P83-C	25	N					TB21- 56	16	N		107		

1 THE STD CONDUCTOR TERMINATION FIGURES ARE PER
2 DIMENSIONS ARE IN INCHES AND TWO PLACE DECIMALS.

MANNED SPACECRAFT CENTER HOUSTON, TEXAS | SIZE A | 1900943
SCALE - NONE | REV LTR AR | SHEET 96 OF 188

MIL 2089 - 4 65 WIR

CONDUCTOR INDIVIDUAL LENGTH NUMBER	ITEM NO.	2	FROM CUT WIRE OR SHIELD STRIP WIRE OR JACKET CIRCUIT POINT	2	T I N	2	TERMINATION SPEC. ITEM NO.	1	NO.	TO CUT WIRE OR SHIELD STRIP WIRE OR JACKET CIRCUIT POINT	2	T I N	2	TERMINATION SPEC. ITEM NO.	1	NO.
B 756R			P83-B	25	N					TB21- 57	16	N		107		
B 757	46			225		200	85	7			400		370	48 52 846		
B 757B	41		TB21- 58	16	N		107			SHLD B 757	25	N				
B 757L			P83-N	25	N					TB21- 59CD	16	N		107		
B 757R			P83-M	25	N					TB21- 59AB	16	N		107		
B 758	46			225		200	85	7			225		200	48 52 845		
B 758B	41		E 33	25	N					SHLD B 758	25	N				
B 758L			P 3-C	25	N					P91-K*	25	N				
B 758R			P 3-F	25	N					P91-K	25	N				
B 759	46			225		200	85	7			225		200	48 52 845		
B 759B	41		E 33	25	N					SHLD B 759	25	N				
B 759L			P 3-R	25	N					P91-N*	25	N				
B 759R			P 3-G	25	N					P91-N	25	N				
B 760	46			225		200	85	7			225		200	48 52 845		
B 760B	41		E 33	25	N					SHLD B 760	25	N				
B 760L			P 3-U	25	N					P91-R*	25	N				
B 760R			P 3-K	25	N					P91-R	25	N				
B 761	40		P 8-A	25	N					TB25- 2	20	N		111		

1 THE STD CONDUCTOR TERMINATION FIGURES ARE PER
2 DIMENSIONS ARE IN INCHES AND TWO PLACE DECIMALS.

MANNED SPACECRAFT CENTER HOUSTON, TEXAS | SIZE A | 1900943
SCALE - NONE | REV LTR AR | SHEET 97 OF 188

MIL 2089 - 4 65 WIR

CONDUCTOR INDIVIDUAL LENGTH NUMBER	ITEM NO.	2	FROM CUT WIRE OR SHIELD STRIP WIRE OR JACKET CIRCUIT POINT	2	T I N	2	TERMINATION SPEC. ITEM NO.	1	NO.	TO CUT WIRE OR SHIELD STRIP WIRE OR JACKET CIRCUIT POINT	2	T I N	2	TERMINATION SPEC. ITEM NO.	1	NO.
B 762	46			225		200	85	7			400		370	48 52 845		
B 762B	41		TB20- 18	16	N		107			SHLD B 762	25	N				
B 762L			P22-M	25	N					TB20- 17CD	16	N		107		
B 762R			P22-L	25	N					TB20- 17AB	16	N		107		
B 763	65			52		23	90 91	7			225		200	86 87 856		
B 763B	41		TB22- 19CD	16	N		107			SHLD B 763	25	N				
B 763E			P66-F1	11	N		89			TB22- 19AB	16	N		107		
B 763X			P66-F2							SHLD B 763						
B 764	46			225		200	85	7			400		370	48 52 846		
B 764B	41		TB20- 69	16	N		107			SHLD B 764	25	N				
B 764L			P 9-E*	25	N					TB20- 70	16	N		107		
B 764R			P 9-D*	25	N					TB20- 71	16	N		107		
B 765	46			225		200	85	7			400		370	48 52 846		
B 765B	41		TB20- 77	16	N		107			SHLD B 765	25	N				
B 765L			P86-C*	25	N					TB20- 78	16	N		107		
B 765R			P86-B*	25	N					TB20- 79	16	N		107		
B 766	46			225		200	85	7			400		370	48 52 846		
B 766B	41		TB20- 75	16	N		107			SHLD B 766	25	N				

1 THE STD CONDUCTOR TERMINATION FIGURES ARE PER
2 DIMENSIONS ARE IN INCHES AND TWO PLACE DECIMALS.

MANNED SPACECRAFT CENTER HOUSTON, TEXAS | SIZE A | 1900943
SCALE - NONE | REV LTR AR | SHEET 98 OF 188

MIL 2089 - 4 65 WIR

CONDUCTOR INDIVIDUAL LENGTH NUMBER	ITEM NO.	2	FROM CUT WIRE OR SHIELD STRIP WIRE OR JACKET CIRCUIT POINT	2	T I N	2	TERMINATION SPEC. ITEM NO.	1	NO.	TO CUT WIRE OR SHIELD STRIP WIRE OR JACKET CIRCUIT POINT	2	T I N	2	TERMINATION SPEC. ITEM NO.	1	NO.
B 766L			P86-E*	25	N					TB20- 74CD	16	N		107		
B 766R			P86-D*	25	N					TB20- 74AB	16	N		107		
B 767	46			225		200	85	7			400		370	48 52 846		
B 767B	41		TB19- 97	16	N		107			SHLD B 767	25	N				
B 767L			P85-EE	25	N					TB19- 96CD	16	N		107		
B 767R			P85-DD	25	N					TB19- 96AB	16	N		107		
B 768	46			225		200	85	7			400		370	48 52 846		
B 768B	41		TB19- 94	16	N		107			SHLD B 768	25	N				
B 768L			P84-EE	25	N					TB19- 95CD	16	N		107		
B 768R			P84-DD	25	N					TB19- 95AB	16	N		107		
B 769	46			225		200	85	7			400		370	48 52 846		
B 769B	41		TB19- 94	16	N		107			SHLD B 769	25	N				
B 769L			P 9-EE	25	N					TB19- 93CD	16	N		107		
B 769R			P 9-DD	25	N					TB19- 93AB	16	N		107		
B 770	46			225		200	85	7			400		370	48 52 846		
B 770B	41		TB19- 91	16	N		107			SHLD B 770	25	N				
B 770L			P83-JJ	25	N					TB19- 90CD	16	N		107		
B 770R			P83-HH	25	N					TB19- 90AB	16	N		107		

1 THE STD CONDUCTOR TERMINATION FIGURES ARE PER
2 DIMENSIONS ARE IN INCHES AND TWO PLACE DECIMALS.

MANNED SPACECRAFT CENTER HOUSTON, TEXAS | SIZE A | 1900943
SCALE - NONE | REV LTR AR | SHEET 99 OF 188

MIL 2089 - 4 65 WIR

CONDUCTOR INDIVIDUAL LENGTH NUMBER	ITEM NO.	2	FROM CUT WIRE OR SHIELD STRIP WIRE OR JACKET CIRCUIT POINT	2	TIN	2	TERMINATION SPEC. 1 ITEM NO.	NO.	TO CUT WIRE OR SHIELD STRIP WIRE OR JACKET CIRCUIT POINT	2	TIN	2	TERMINATION SPEC 1 ITEM NO.	NO.
B 771	46			225	200	85	7			400	370	48	52 846	
B 771B	41		TB19- 91	16N		107			SHLD B 771	25N				
B 771L			P86-EE	25N					TB19- 92CD	16N		107		
B 771R			P86-DD	25N					TB19- 92AB	16N		107		
B 772	46			225	200	85	7			400	370	48	52 846	
B 772B	41		TB22- 36	16N		107			SHLD B 772	25N				
B 772L			P10-C	25N					TB22- 35CD	16N		107		
B 772R			P10-B	25N					TB22- 35AB	16N		107		
B 773	46			225	200	85	7			400	370	48	52 846	
B 773B	41		TB21- 67	16N		107			SHLD B 773	25N				
B 773L			P10-E	25N					TB21- 68CD	16N		107		
B 773R			P10-D	25N					TB21- 68AB	16N		107		
B 774	46			225	200	85	7			400	370	48	52 846	
B 774B	41		TB21- 70	16N		107			SHLD B 774	25N				
B 774L			P85-C	25N					TB21- 69CD	16N		107		
B 774R			P85-B	25N					TB21- 69AB	16N		107		
B 775	46			225	200	85	7			400	370	48	52 846	
B 775B	41		TB21- 61	16N		107			SHLD B 775	25N				

1 THE STD CONDUCTOR TERMINATION FIGURES ARE PER
2 DIMENSIONS ARE IN INCHES AND TWO PLACE DECIMALS.

MANNED SPACECRAFT CENTER HOUSTON, TEXAS | SIZE A | 1900943
SCALE - NONE | REV LTR AR | SHEET 100 OF 188

MIL 2069 4-63 WIR

CONDUCTOR INDIVIDUAL LENGTH NUMBER	ITEM NO.	2	FROM CUT WIRE OR SHIELD STRIP WIRE OR JACKET CIRCUIT POINT	2	TIN	2	TERMINATION SPEC. 1 ITEM NO.	NO.	TO CUT WIRE OR SHIELD STRIP WIRE OR JACKET CIRCUIT POINT	2	TIN	2	TERMINATION SPEC 1 ITEM NO.	NO.
B 775L			P86-R	25N					TB21- 60CD	16N		107		
B 775R			P86-P	25N					TB21- 60AB	16N		107		
B 776	46			225	200	85	7			400	370	48	52 846	
B 776B	41		TB21- 64	16N		107			SHLD B 776	25N				
B 776L			P86-T	25N					TB21- 65CD	16N		107		
B 776R			P86-S	25N					TB21- 65AB	16N		107		
B 777	46			225	200	85	7			400	370	48	52 846	
B 777B	41		TB21- 61	16N		107			SHLD B 777	25N				
B 777L			P83-E	25N					TB21- 62CD	16N		107		
B 777R			P83-D	25N					TB21- 62AB	16N		107		
B 778	46			225	200	85	7			400	370	48	52 846	
B 778B	41		TB21- 64	16N		107			SHLD B 778	25N				
B 778L			P83-T	25N					TB21- 63CD	16N		107		
B 778R			P83-S	25N					TB21- 63AB	16N		107		
B 779	46			225	200	85	7			400	370	48	52 846	
B 779B	41		TB20- 85	16N		107			SHLD B 779	25N				
B 779L			P84-R	25N					TB20- 86CD	16N		107		
B 779R			P84-P	25N					TB20- 86AB	16N		107		

1 THE STD CONDUCTOR TERMINATION FIGURES ARE PER
2 DIMENSIONS ARE IN INCHES AND TWO PLACE DECIMALS.

MANNED SPACECRAFT CENTER HOUSTON, TEXAS | SIZE A | 1900943
SCALE - NONE | REV LTR AR | SHEET 101 OF 188

MIL 2069 4-63 WIR

CONDUCTOR INDIVIDUAL LENGTH NUMBER	ITEM NO.	2	FROM CUT WIRE OR SHIELD STRIP WIRE OR JACKET CIRCUIT POINT	2	TIN	2	TERMINATION SPEC. 1 ITEM NO.	NO.	TO CUT WIRE OR SHIELD STRIP WIRE OR JACKET CIRCUIT POINT	2	TIN	2	TERMINATION SPEC 1 ITEM NO.	NO.
B 780	46			225	200	85	7			400	370	48	52 846	
B 780B	41		TB20- 88	16N		107			SHLD B 780	25N				
B 780L			P84-E*	25N					TB20- 89CD	16N		107		
B 780R			P84-D*	25N					TB20- 89AB	16N		107		
B 781	46			225	200	85	7			400	370	48	52 846	
B 781B	41		TB20- 88	16N		107			SHLD B 781	25N				
B 781L			P86-R*	25N					TB20- 87CD	16N		107		
B 781R			P86-P*	25N					TB20- 87AB	16N		107		
B 782	42		P99-C	25N					TB22- 40AB	16N		107		
B 783	42		P11-A	25N					J19-T	25N				
B 784	42		P11-B	25N					J19-P*	25N				
B 785	42		P11-C	25N					J19-N*	25N				
B 786	42		P11-J	25N					J19-G*	25N				
B 787			DELETED											
B 788			DELETED											
B 789	42		P11-H	25N					J19-H*	25N				
B 790			DELETED											
B 791			DELETED											

1 THE STD CONDUCTOR TERMINATION FIGURES ARE PER
2 DIMENSIONS ARE IN INCHES AND TWO PLACE DECIMALS.

MANNED SPACECRAFT CENTER HOUSTON, TEXAS | SIZE A | 1900943
SCALE - NONE | REV LTR AR | SHEET 102 OF 188

MIL 2069 4-63 WIR

CONDUCTOR INDIVIDUAL LENGTH NUMBER	ITEM NO.	2	FROM CUT WIRE OR SHIELD STRIP WIRE OR JACKET CIRCUIT POINT	2	TIN	2	TERMINATION SPEC. 1 ITEM NO.	NO.	TO CUT WIRE OR SHIELD STRIP WIRE OR JACKET CIRCUIT POINT	2	TIN	2	TERMINATION SPEC 1 ITEM NO.	NO.
B 794	42		P11-F	25N					J19-Z	25N				
B 795	42		P11-G	25N					J19-A*	25N				
B 796	42		P11-K	25N					J19-B*	25N				
B 797	46			225	200	85				225	200	48	52 845	
B 797B	41		E 38	25N					SHLD B 797	25N				
B 797L			P71-K	25N					P65-N*	25N				
B 797R			P71-J	25N					P65-N	25N				
B 798	46			225	200	85				225	200	48	52 845	
B 798B	41		E 38	25N					SHLD B 798	25N				
B 798L			P71-M	25N					P65-P*	25N				
B 798R			P71-L	25N					P65-P	25N				
B 799	41		P71-B	25N					P63-C	25N				
B 800	41		P71-C	25N					P63-V*	25N				
B 801	41		P71-E	25N					P63-U*	25N				
B 802	41		P71-F	25N					P63-T*	25N				
B 803	41		P71-G	25N					P63-S*	25N				
B 804	41		P71-P	25N					P63-R*	25N				
B 805	41		P71-R	25N					P63-Q*	25N				

1 THE STD CONDUCTOR TERMINATION FIGURES ARE PER
2 DIMENSIONS ARE IN INCHES AND TWO PLACE DECIMALS.

MANNED SPACECRAFT CENTER HOUSTON, TEXAS | SIZE A | 1900943
SCALE - NONE | REV LTR AR | SHEET 103 OF 188

MIL 2069 4-63 WIR

CONDUCTOR NUMBER	INDIVIDUAL LENGTH ITEM NO. (3)	FROM CUT WIRE OR SHIELD STRIP WIRE OR JACKET CIRCUIT POINT (2)	TIN (3)	TERMINATION SPEC. (1) ITEM NO.	NO.	TO CUT WIRE OR SHIELD STRIP WIRE OR JACKET CIRCUIT POINT (2)	TIN (3)	TERMINATION SPEC. (1) ITEM NO.	NO.
B 806	41	P71-S	25N			P63-P*	25N		
B 807	41	P71-T	25N			P63-N*	25N		
B 808	41	P71-U	25N			P63-M*	25N		
B 809	41	P71-V	25N			P63-K*	25N		
B 810	41	P71-W	25N			P63-J*	25N		
B 811	41	P71-Y	25N			P63-D	25N		
B 812	41	P71-Z	25N			P63-B	25N		
B 813	41	P71-A*	25N			P63-E	25N		
B 814	41	P71-B*	25N			P63-F	25N		
B 815	41	P71-G*	25N			P63-G	25N		
B 816	41	P71-H*	25N			P63-H	25N		
B 817	41	P71-I*	25N			P63-J	25N		
B 818	41	P71-J*	25N			P63-K	25N		
B 819	41	P71-K*	25N			P63-L	25N		
B 820	41	P71-M*	25N			P63-M	25N		
B 821	41	P71-N*	25N			P63-N	25N		
B 822	41	P71-R*	25N			P63-P	25N		
B 823	41	P71-E*	25N			P65-DD	25N		

1> THE STD CONDUCTOR TERMINATION FIGURES ARE PER
2> DIMENSIONS ARE IN INCHES AND TWO PLACE DECIMALS.

MANNED SPACECRAFT CENTER HOUSTON, TEXAS | SIZE A | 1900943
SCALE - NONE | REV LTR AR | SHEET 104 OF 188

MIL 2089 - 4-65 WIR

CONDUCTOR NUMBER	INDIVIDUAL LENGTH ITEM NO. (3)	FROM CUT WIRE OR SHIELD STRIP WIRE OR JACKET CIRCUIT POINT (2)	TIN (3)	TERMINATION SPEC. (1) ITEM NO.	NO.	TO CUT WIRE OR SHIELD STRIP WIRE OR JACKET CIRCUIT POINT (2)	TIN (3)	TERMINATION SPEC. (1) ITEM NO.	NO.
B 824	41	P71-D*	25N			P65-EE	25N		
B 825	46		225	200 85	7		400	370 48 52 846	
B 825B	41	TB22- 55	16N	107		SHLD B 825	25N		
B 825L		P84-J	25N			TB22- 54CD	16N	107	
B 825R		P84-H	25N			TB22- 54AB	16N	107	
B 826	46		225	200 85	7		400	370 48 52 846	
B 826B	41	TB22- 52	16N	107		SHLD B 826	25N		
B 826L		P 9-J	25N			TB22- 51CD	16N	107	
B 826R		P 9-H	25N			TB22- 51AB	16N	107	
B 827	46		225	200 85	7		400	370 48 52 846	
B 827B	41	TB22- 58	16N	107		SHLD B 827	25N		
B 827L		P86-E	25N			TB22- 59CD	16N	107	
B 827R		P86-D	25N			TB22- 59AB	16N	107	
B 828	46		225	200 85	7		400	370 48 52 846	
B 828B	41	TB22- 58	16N	107		SHLD B 828	25N		
B 828L		P86-N	25N			TB22- 57CD	16N	107	
B 828R		P86-M	25N			TB22- 57AB	16N	107	
B 829	45		225	200 85			400	370 85	

1> THE STD CONDUCTOR TERMINATION FIGURES ARE PER
2> DIMENSIONS ARE IN INCHES AND TWO PLACE DECIMALS.

MANNED SPACECRAFT CENTER HOUSTON, TEXAS | SIZE A | 1900943
SCALE - NONE | REV LTR AR | SHEET 105 OF 188

MIL 2089 - 4-65 WIR

CONDUCTOR NUMBER	INDIVIDUAL LENGTH ITEM NO. (3)	FROM CUT WIRE OR SHIELD STRIP WIRE OR JACKET CIRCUIT POINT (2)	TIN (3)	TERMINATION SPEC. (1) ITEM NO.	NO.	TO CUT WIRE OR SHIELD STRIP WIRE OR JACKET CIRCUIT POINT (2)	TIN (3)	TERMINATION SPEC. (1) ITEM NO.	NO.
B 829B	41	TB19- 15	16N	107		SHLD B 829	25N		
B 829L		P21-G*	25N			TB19- 16CD	16N	107	
B 829R		P21-F*	25N			TB19- 16AB	16N	107	
B 830	42	P32-Q*	25N			TB21- 47CD	16N	107	
B 831	42	P32-R*	25N			TB21- 60AB	16N	107	
B 832	42	P32-N*	25N			TB21- 47AB	16N	107	
B 833	12								
B 833L		P32-T	25N			TB21- 65CD	16N	107	
B 833R		P32-S	25N			TB21- 65AB	16N	107	
B 834	12								
B 834L		P32-V	25N			TB21- 62CD	16N	107	
B 834R		P32-U	25N			TB21- 62AB	16N	107	
B 838	42	P37-C	25N			J19-C*	25N		
B 839		DELETED							
B 840		DELETED							
B 842		DELETED							
B 843		DELETED							
B 844	46		225	200 85	7		400	370 48 52 846	

1> THE STD CONDUCTOR TERMINATION FIGURES ARE PER
2> DIMENSIONS ARE IN INCHES AND TWO PLACE DECIMALS.

MANNED SPACECRAFT CENTER HOUSTON, TEXAS | SIZE A | 1900943
SCALE - NONE | REV LTR AR | SHEET 106 OF 188

MIL 2089 - 4-65 WIR

CONDUCTOR NUMBER	INDIVIDUAL LENGTH ITEM NO. (3)	FROM CUT WIRE OR SHIELD STRIP WIRE OR JACKET CIRCUIT POINT (2)	TIN (3)	TERMINATION SPEC. (1) ITEM NO.	NO.	TO CUT WIRE OR SHIELD STRIP WIRE OR JACKET CIRCUIT POINT (2)	TIN (3)	TERMINATION SPEC. (1) ITEM NO.	NO.
B 844B	41	TB21- 76	16N	107		SHLD B 844	25N		
B 844L		P10-N	25N			TB21- 74	16N	107	
B 844R		P10-M	25N			TB21- 75	16N	107	
B 845	46		225	200 85	7		400	370 48 52 846	
B 845B	41	TB21- 73	16N	107		SHLD B 845	25N		
B 845L		P10-R	25N			TB21- 71	16N	107	
B 845R		P10-P	25N			TB21- 72	16N	107	
B 846	46		225	200 85	7		400	370 48 52 846	
B 846B	41	TB21- 78	16N	107		SHLD B 846	25N		
B 846L		P85-E	25N			TB21- 77CD	16N	107	
B 846R		P85-D	25N			TB21- 77AB	16N	107	
B 847	46		225	200 85	7		400	370 48 52 846	
B 847B	41	TB18- 78	16N	107		SHLD B 847	25N		
B 847L		P84-T*	25N			TB18- 79CD	16N	107	
B 847R		P84-S*	25N			TB18- 79AB	16N	107	
B 848	42	P35-D*	25N			TB22- 2AB	16N	107	
B 849	40	P42-A	25N			TB25- 5	20N	111	
B 850	40	P44-A	25N			TB25- 6	20N	111	

1> THE STD CONDUCTOR TERMINATION FIGURES ARE PER
2> DIMENSIONS ARE IN INCHES AND TWO PLACE DECIMALS.

MANNED SPACECRAFT CENTER HOUSTON, TEXAS | SIZE A | 1900943
SCALE - NONE | REV LTR AR | SHEET 107 OF 188

MIL 2089 - 4-65 WIR

CONDUCTOR INDIVIDUAL LENGTH NUMBER	ITEM NO.	2	FROM CUT WIRE OR SHIELD STRIP WIRE OR JACKET CIRCUIT POINT	3	T I N	2	TERMINATION SPEC. 1 ITEM NO.	NO.	TO CUT WIRE OR SHIELD STRIP WIRE OR JACKET CIRCUIT POINT	3	T I N	2	TERMINATION SPEC. 1 ITEM NO.	NO.
B 851	46			22S	20O	85	7			40O	37O	48 52	846	
B 851B	41		TB20- 94	16N		107			SHLD B 851	25N				
B 851L			P84-V	25N					TB20- 95CD	16N		107		
B 851R			P84-U	25N					TB20- 95AB	16N		107		
B 852	46			22S	20O	85	7			40O	37O	48 52	846	
B 852B	41		TB20- 91	16N		107			SHLD B 852	25N				
B 852L			P84-G*	25N					TB20- 90CD	16N		107		
B 852R			P84-F*	25N					TB20- 90AB	16N		107		
B 853	46			22S	20O	85	7			40O	37O	48 52	846	
B 853B	41		TB20- 94	16N		107			SHLD B 853	25N				
B 853L			P83-J	25N					TB20- 93CD	16N		107		
B 853R			P83-H	25N					TB20- 93AB	16N		107		
B 854	46			22S	20O	85	7			40O	37O	48 52	846	
B 854B	41		TB20- 97	16N		107			SHLD B 854	25N				
B 854L			P83-X*	25N					TB20- 96CD	16N		107		
B 854R			P83-W*	25N					TB20- 96AB	16N		107		
B 855	46			22S	20O	85	7			40O	37O	48 52	846	
B 855B	41		TB20- 91	16N		107			SHLD B 855	25N				

1> THE STD CONDUCTOR TERMINATION FIGURES ARE PER
2> DIMENSIONS ARE IN INCHES AND TWO PLACE DECIMALS.

MANNED SPACECRAFT CENTER HOUSTON, TEXAS | SIZE A | 1900943
SCALE - NONE | REV LTR AR | SHEET 108 OF 188

MIL 2069 - 4-63 WIR

CONDUCTOR INDIVIDUAL LENGTH NUMBER	ITEM NO.	2	FROM CUT WIRE OR SHIELD STRIP WIRE OR JACKET CIRCUIT POINT	3	T I N	2	TERMINATION SPEC. 1 ITEM NO.	NO.	TO CUT WIRE OR SHIELD STRIP WIRE OR JACKET CIRCUIT POINT	3	T I N	2	TERMINATION SPEC. 1 ITEM NO.	NO.
B 855L			P83-V	25N					TB20- 92CD	16N		107		
B 855R			P83-U	25N					TB20- 92AB	16N		107		
B 856	41		P17-A	25N					TB25- 11	20N		111		
B 857	46			22S	20O	85	7			40O	37O	48 52	846	
B 857B	41		TB19- 24	16N		107			SHLD B 857	25N				
B 857L			P29-C	25N					TB19- 25CD	16N		107		
B 857R			P29-B	25N					TB19- 25AB	16N		107		
B 858	46			22S	20O	85	7			40O	37O	48 52	846	
B 858B	41		TB18- 9	16N		107			SHLD B 858	25N				
B 858L			P29-G	25N					TB18- 8CD	16N		107		
B 858R			P29-F	25N					TB18- 8AB	16N		107		
B 859	46			22S	20O	48 52	845			22S	20O	85	7	
B 859A	41		SHLD B 859	25N					E 38	25N				
B 859L			P65-M*	25N					P28-C	25N				
B 859R			P65-M	25N					P28-B	25N				
B 860	46			22S	20O	85	7			40O	37O	48 52	846	
B 860B	41		TB22- 64	16N		107			SHLD B 860	25N				
B 860L			P84-E	25N					TB22- 65CD	16N		107		

1> THE STD CONDUCTOR TERMINATION FIGURES ARE PER
2> DIMENSIONS ARE IN INCHES AND TWO PLACE DECIMALS.

MANNED SPACECRAFT CENTER HOUSTON, TEXAS | SIZE A | 1900943
SCALE - NONE | REV LTR AR | SHEET 109 OF 188

MIL 2069 - 4-63 WIR

CONDUCTOR INDIVIDUAL LENGTH NUMBER	ITEM NO.	2	FROM CUT WIRE OR SHIELD STRIP WIRE OR JACKET CIRCUIT POINT	3	T I N	2	TERMINATION SPEC. 1 ITEM NO.	NO.	TO CUT WIRE OR SHIELD STRIP WIRE OR JACKET CIRCUIT POINT	3	T I N	2	TERMINATION SPEC. 1 ITEM NO.	NO.
B 860R			P84-D	25N					TB22- 65AB	16N		107		
B 861	46			22S	20O	85	7			40O	37O	48 52	846	
B 861B	41		TB22- 61	16N		107			SHLD B 861	25N				
B 861L			P 9-E	25N					TB22- 62CD	16N		107		
B 861R			P 9-D	25N					TB22- 62AB	16N		107		
B 862	46			22S	20O	85	7			40O	37O	48 52	846	
B 862B	41		TB22- 64	16N		107			SHLD B 862	25N				
B 862L			P83-G	25N					TB22- 63CD	16N		107		
B 862R			P83-F	25N					TB22- 63AB	16N		107		
B 863	46			22S	20O	85	7			40O	37O	48 52	846	
B 863B	41		TB20- 64	16N		107			SHLD B 863	25N				
B 863L			P83-L	25N					TB20- 63CD	16N		107		
B 863R			P83-K	25N					TB20- 63AB	16N		107		
B 864	46			22S	20O	85	7			40O	37O	48 52	846	
B 864B	41		TB22- 61	16N		107			SHLD B 864	25N				
B 864L			P83-R	25N					TB22- 60CD	16N		107		
B 864R			P83-P	25N					TB22- 60A	16N		107		
B 865	46			22S	20O	85	7			40O	37O	48 52	846	

1> THE STD CONDUCTOR TERMINATION FIGURES ARE PER
2> DIMENSIONS ARE IN INCHES AND TWO PLACE DECIMALS.

MANNED SPACECRAFT CENTER HOUSTON, TEXAS | SIZE A | 1900943
SCALE - NONE | REV LTR AR | SHEET 110 OF 188

MIL 2069 - 4-63 WIR

CONDUCTOR INDIVIDUAL LENGTH NUMBER	ITEM NO.	2	FROM CUT WIRE OR SHIELD STRIP WIRE OR JACKET CIRCUIT POINT	3	T I N	2	TERMINATION SPEC. 1 ITEM NO.	NO.	TO CUT WIRE OR SHIELD STRIP WIRE OR JACKET CIRCUIT POINT	3	T I N	2	TERMINATION SPEC. 1 ITEM NO.	NO.
B 865B	41		TB20- 77	16N		107			SHLD B 865	25N				
B 865L			J16-H*	25N					TB20- 76CD	16N		107		
B 865R			J16-G*	25N					TB20- 76AB	16N		107		
B 866	42		P32-S*	25N					TB21- 44AB	16N		107		
B 867	42		P32-T*	25N					TB21- 57	16N		107		
B 868	12													
B 868L			P32-X	25N					TB21- 59CD	16N		107		
B 868R			P32-W	25N					TB21- 59AB	16N		107		
B 869	46			22S	20O	85	7			40O	37O	48 52	846	
B 869B	41		TB21- 88	16N		107			SHLD B 869	25N				
B 869L			P10-G	25N					TB21- 87CD	16N		107		
B 869R			P10-F	25N					TB21- 87AB	16N		107		
B 870	46			22S	20O	85	7			40O	37O	48 52	846	
B 870B	41		TB21- 84	16N		107			SHLD B 870	25N				
B 870L			P10-J	25N					TB21- 83CD	16N		107		
B 870R			P10-H	25N					TB21- 83AB	16N		107		
B 871	46			22S	20O	85	7			40O	37O	48 52	846	
B 871B	41		TB21- 81	16N		107			SHLD B 871	25N				

1> THE STD CONDUCTOR TERMINATION FIGURES ARE PER
2> DIMENSIONS ARE IN INCHES AND TWO PLACE DECIMALS.

MANNED SPACECRAFT CENTER HOUSTON, TEXAS | SIZE A | 1900943
SCALE - NONE | REV LTR AR | SHEET 111 OF 188

MIL 2069 - 4-63 WIR

CONDUCTOR INDIVIDUAL LENGTH NUMBER	ITEM NO.	2	FROM CUT WIRE OR SHIELD STRIP WIRE OR JACKET CIRCUIT POINT	2	TIN	2	TERMINATION SPEC. 1 ITEM NO					NO.	TO CUT WIRE OR SHIELD STRIP WIRE OR JACKET CIRCUIT POINT	2	TIN	2	TERMINATION SPEC. 1 ITEM NO					NO.
B 871L			P10-T	25	N								TB21- 82CD	16	N		107						
B 871R			P10-S	25	N								TB21- 82AB	16	N		107						
B 872	46			225		200	85			7				400		370	48	52	846				
B 872B	41		TB21- 88	16	N		107						SHLD B 872	25	N								
B 872L			P10-V	25	N								TB21- 86CD	16	N		107						
B 872R			P10-U	25	N								TB21- 86AB	16	N		107						
B 873	46			225		200	85			7				400		370	48	52	846				
B 873B	41		TB21- 84	16	N		107						SHLD B 873	25	N								
B 873L			P85-G	25	N								TB21- 85CD	16	N		107						
B 873R			P85-F	25	N								TB21- 85AB	16	N		107						
B 874	46			225		200	85			7				400		370	48	52	846				
B 874B	41		TB21- 81	16	N		107						SHLD B 874	25	N								
B 874L			P85-J	25	N								TB21- 79	16	N		107						
B 874R			P85-H	25	N								TB21- 80	16	N		107						
B 875	46			225		200	85			7				400		370	48	52	846				
B 875B	41		TB21- 88	16	N		107						SHLD B 875	25	N								
B 875L			P 9-T	25	N								TB21- 89CD	16	N		107						
B 875R			P 9-S	25	N								TB21- 89AB	16	N		107						

1> THE STD CONDUCTOR TERMINATION FIGURES ARE PER
2> DIMENSIONS ARE IN INCHES AND TWO PLACE DECIMALS.

MANNED SPACECRAFT CENTER HOUSTON, TEXAS | SIZE A | 1900943
SCALE - NONE | REV LTR AR | SHEET 112 OF 188

MIL 2085 - 4-85 WIR

CONDUCTOR INDIVIDUAL LENGTH NUMBER	ITEM NO.	2	FROM CUT WIRE OR SHIELD STRIP WIRE OR JACKET CIRCUIT POINT	2	TIN	2	TERMINATION SPEC. 1 ITEM NO.					NO.	TO CUT WIRE OR SHIELD STRIP WIRE OR JACKET CIRCUIT POINT	2	TIN	2	TERMINATION SPEC. 1 ITEM NO.					NO.
B 876			DELETED																				
B 876B			DELETED																				
B 876L			DELETED																				
B 876R			DELETED																				
B 877			DELETED																				
B 877B			DELETED																				
B 877L			DELETED																				
B 877R			DELETED																				
B 878	42		J18-LL	25	N								P14-V*	25	N								
B 879	42		J22-J	25	N								P14-W*	25	N								
B 880	16		P22-A	25	N								TB25- 12	40	N		111						
B 881	41		P90-E	327	N								TB23- 12	20	N		111						
B 882	41		P90-I	327	N								TB23- 13	20	N		111						
B 883			J22-U*	25	N								TB22- 60AB	16	N		107						
B 883	07			225		200	120			7				225		200	117	118	856				
B 883B	41		TB22- 61	16	N		107						SHLD B 883	25	N								
B 884	42		J22-V*	25	N								TB22- 60CD	16	N		107						
B 885			J22-G	25	N								TB22- 63AB	16	N		107						

1> THE STD CONDUCTOR TERMINATION FIGURES ARE PER
2> DIMENSIONS ARE IN INCHES AND TWO PLACE DECIMALS.

MANNED SPACECRAFT CENTER HOUSTON, TEXAS | SIZE A | 1900943
SCALE - NONE | REV LTR AR | SHEET 113 OF 188

MIL 2085 - 4-85 WIR

CONDUCTOR INDIVIDUAL LENGTH NUMBER	ITEM NO.	2	FROM CUT WIRE OR SHIELD STRIP WIRE OR JACKET CIRCUIT POINT	2	TIN	2	TERMINATION SPEC. 1 ITEM NO.					NO.	TO CUT WIRE OR SHIELD STRIP WIRE OR JACKET CIRCUIT POINT	2	TIN	2	TERMINATION SPEC. 1 ITEM NO.					NO.
B 885	07			225		200	120			7				225		200	117	118	856				
B 885B	41		TB22- 64	16	N		107						SHLD B 885	25	N								
B 886	42		J22-H	25	N								TB22- 63CD	16	N		107						
B 887	42		J21-W	25	N								TB22- 40AB	16	N		107						
B 888	40		P30-A	25	N								TB25- 2	20	N		111						
B 889	46			225		200	85			7				400		370	48	52	846				
B 889B	41		TB21- 91	16	N		107						SHLD B 889	25	N								
B 889L			P10-V*	25	N								TB21- 92CD	16	N		107						
B 889R			P10-U*	25	N								TB21- 92AB	16	N		107						
B 890	46			225		200	85			7				400		370	48	52	846				
B 890B	41		TB21- 91	16	N		107						SHLD B 890	25	N								
B 890L			P 9-G*	25	N								TB21- 93CD	16	N		107						
B 890R			P 9-F*	25	N								TB21- 90AB	16	N		107						
B 891	46			225		200	85			7				400		370	48	52	846				
B 891B	41		TB21- 91	16	N		107						SHLD B 891	25	N								
B 891L			P83-E*	25	N								TB21- 90CD	16	N		107						
B 891R			P83-D*	25	N								TB21- 90AB	16	N		107						
B 892	42		J16-Z*	25	N								TB21- 40AB	16	N		107						

1> THE STD CONDUCTOR TERMINATION FIGURES ARE PER
2> DIMENSIONS ARE IN INCHES AND TWO PLACE DECIMALS.

MANNED SPACECRAFT CENTER HOUSTON, TEXAS | SIZE A | 1900943
SCALE - NONE | REV LTR AR | SHEET 114 OF 188

MIL 2085 - 4-85 WIR

CONDUCTOR INDIVIDUAL LENGTH NUMBER	ITEM NO.	2	FROM CUT WIRE OR SHIELD STRIP WIRE OR JACKET CIRCUIT POINT	2	TIN	2	TERMINATION SPEC. 1 ITEM NO.					NO.	TO CUT WIRE OR SHIELD STRIP WIRE OR JACKET CIRCUIT POINT	2	TIN	2	TERMINATION SPEC. 1 ITEM NO.					NO.
B 893	42		J16-DD	25	N								TB21- 40AB	16	N		107						
B 894	42		J16-GG	25	N								TB21- 40AB	16	N		107						
B 895	46			225		200	85			7				400		370	48	52	846				
B 895B	41		TB19- 7	16	N		107						SHLD B 895	25	N								
B 895L			P29-E	25	N								TB19- 6CD	16	N		107						
B 895R			P29-D	25	N								TB19- 6AB	16	N		107						
B 896	65			225		200	86	87	856					225		200	86	87	856				
B 896A	41		SHLD B 896	25	N								TB17- 49CD	16	N		107						
B 896B	41		P15-F	25	N								SHLD B 896	25	N								
B 896E			TB17- 49AB	16	N		107						P15-G	25	N								
B 897	65			225		200	86	87	856					225		200	86	87	856				
B 897A	41		SHLD B 897	25	N								TB17- 48CD	16	N		107						
B 897B	41		P15-K	25	N								SHLD B 897	25	N								
B 897E			TB17- 48AB	16	N		107						P15-L	25	N								
B 898	65			225		200	86	87	856					225		200	86	87	856				
B 898A	41		SHLD B 898	25	N								TB17- 47CD	16	N		107						
B 898B	41		P14-X	25	N								SHLD B 898	25	N								
B 898E			TB17- 47AB	16	N		107						P14-W	25	N								

1> THE STD CONDUCTOR TERMINATION FIGURES ARE PER
2> DIMENSIONS ARE IN INCHES AND TWO PLACE DECIMALS.

MANNED SPACECRAFT CENTER HOUSTON, TEXAS | SIZE A | 1900943
SCALE - NONE | REV LTR AR | SHEET 115 OF 188

MIL 2085 - 4-85 WIR

CONDUCTOR NUMBER	ITEM NO.	INDIVIDUAL LENGTH (2)	FROM CUT WIRE OR SHIELD STRIP WIRE OR JACKET	FROM CIRCUIT POINT (2)	FROM TIN (2)	FROM TERMINATION SPEC. (1)	FROM ITEM NO.	FROM NO.	TO CUT WIRE OR SHIELD STRIP WIRE OR JACKET	TO CIRCUIT POINT (2)	TO TIN (2)	TO TERMINATION SPEC. (1)	TO ITEM NO.	TO NO.
B 899	65			225		200	86 87 856			225		200	86 87 856	
B 899A	41		SHLD B 899	25N					TB17- 46CD	16N			107	
B 899B	41		P15-N*	25N					SHLD B 899	25N				
B 899E			TB17- 46AB	16N			107		P15-M*	25N				
B 900	65			225		200	86 87 856			225		200	86 87 856	
B 900A	41		SHLD B 900	25N					TB17- 45CD	16N			107	
B 900B	41		P15-K*	25N					SHLD B 900	25N				
B 900E			TB17- 45AB	16N			107		P15-J*	25N				
B 901	65			225		200	86 87 856			225		200	86 87 856	
B 901A	41		SHLD B 901	25N					TB17- 44CD	16N			107	
B 901B	41		P15-P*	25N					SHLD B 901	25N				
B 901E			TB17- 44AB	16N			107		P15-O*	25N				
B 902	65			225		200	86 87 856			225		200	86 87 856	
B 902A	41		SHLD B 902	25N					P14-T	25N				
B 902B	41		TB17- 43CD	16N			107		SHLD B 902	25N				
B 902E			P14-S	25N					TB17- 43AB	16N			107	
B 903	65			225		200	86 87 856			225		200	86 87 856	
B 903A	41		SHLD B 903	25N					P15-I*	25N				

(1) THE STD CONDUCTOR TERMINATION FIGURES ARE PER
(2) DIMENSIONS ARE IN INCHES AND TWO PLACE DECIMALS.

MIL 2565 - 4 85 WIR

MANNED SPACECRAFT CENTER HOUSTON, TEXAS | SIZE A | 1900943
SCALE - NONE | REV LTR AR | SHEET 116 OF 188

CONDUCTOR NUMBER	ITEM NO.	INDIVIDUAL LENGTH (2)	FROM CUT WIRE OR SHIELD STRIP WIRE OR JACKET	FROM CIRCUIT POINT (2)	FROM TIN (2)	FROM TERMINATION SPEC. (1)	FROM ITEM NO.	FROM NO.	TO CUT WIRE OR SHIELD STRIP WIRE OR JACKET	TO CIRCUIT POINT (2)	TO TIN (2)	TO TERMINATION SPEC. (1)	TO ITEM NO.	TO NO.
B 903B	41		TB17- 42CD	16N			107		SHLD B 903	25N				
B 903E			P15-H*	25N					TB17- 42AB	16N			107	
B 904	65			225		200	86 87 856			225		200	86 87 856	
B 904A	41		SHLD B 904	25N					P15-V	25N				
B 904B	41		TB17- 41CD	16N			107		SHLD B 904	25N				
B 904E			P15-U	25N					TB17- 41AB	16N			107	
B 905	65			225		200	86 87 856			225		200	86 87 856	
B 905A	41		SHLD B 905	25N					P15-G*	25N				
B 905B	41		TB17- 40CD	16N			107		SHLD B 905	25N				
B 905E			P15-F*	25N					TB17- 40AB	16N			107	
B 906	65			52		23	90 91	7		225		200	86 87 856	
B 906B	41		P17-B*	25N					SHLD B 906					
B 906E			P 7-C1	11N			89		P17-A*	25N				
B 906X			P 7-C2						SHLD B 906					
B 907	46			225		200	85	7		400		370	48 52 846	
B 907B	41		TB22- 88	16N			107		SHLD B 907	25N				
B 907L			P10-C*	25N					TB22- 86	16N			107	
B 907R			P10-B*	25N					TB22- 87	16N			107	

(1) THE STD CONDUCTOR TERMINATION FIGURES ARE PER
(2) DIMENSIONS ARE IN INCHES AND TWO PLACE DECIMALS.

MIL 2565 - 4 85 WIR

MANNED SPACECRAFT CENTER HOUSTON, TEXAS | SIZE A | 1900943
SCALE - NONE | REV LTR AR | SHEET 117 OF 188

CONDUCTOR NUMBER	ITEM NO.	INDIVIDUAL LENGTH (2)	FROM CUT WIRE OR SHIELD STRIP WIRE OR JACKET	FROM CIRCUIT POINT (2)	FROM TIN (2)	FROM TERMINATION SPEC. (1)	FROM ITEM NO.	FROM NO.	TO CUT WIRE OR SHIELD STRIP WIRE OR JACKET	TO CIRCUIT POINT (2)	TO TIN (2)	TO TERMINATION SPEC. (1)	TO ITEM NO.	TO NO.
B 908	46			225		200	85	7		400		370	48 52 846	
B 908B	41		TB22- 85	16N			107		SHLD B 908	25N				
B 908L			P10-N*	25N					TB22- 83	16N			107	
B 908R			P10-M*	25N					TB22- 84	16N			107	
B 909	46			225		200	85	7		400		370	48 52 846	
B 909B	41		TB22- 82	16N			107		SHLD B 909	25N				
B 909L			P85-C*	25N					TB22- 80	16N			107	
B 909R			P85-B*	25N					TB22- 81	16N			107	
B 910	07			225		200	120			225		200	117 118 856	
B 910B	41		TB22- 58	16N			107		SHLD B 910	25N				
B 910W			J22-M*	25N					TB22- 57AB	16N			107	
B 911	42		J22-N*	25N					TB22- 57CD	16N			107	
B 912	41		P11-T*	25N					TB25- 10	20N			111	
B 913	16		J 3-BB	25N					TB23- 15	20N			111	
B 914	42		J22-C*	25N					TB20- 81AB	16N			107	
B 915	65			225		200	86 87 856			225		200	86 87 856	
B 915A	41		SHLD B 915	25N					TB17- 37CD	16N			107	
B 915B	41		P15-T	25N					SHLD B 915	25N				

(1) THE STD CONDUCTOR TERMINATION FIGURES ARE PER
(2) DIMENSIONS ARE IN INCHES AND TWO PLACE DECIMALS.

MIL 2565 - 4 85 WIR

MANNED SPACECRAFT CENTER HOUSTON, TEXAS | SIZE A | 1900943
SCALE - NONE | REV LTR AR | SHEET 118 OF 188

CONDUCTOR NUMBER	ITEM NO.	INDIVIDUAL LENGTH (2)	FROM CUT WIRE OR SHIELD STRIP WIRE OR JACKET	FROM CIRCUIT POINT (2)	FROM TIN (2)	FROM TERMINATION SPEC. (1)	FROM ITEM NO.	FROM NO.	TO CUT WIRE OR SHIELD STRIP WIRE OR JACKET	TO CIRCUIT POINT (2)	TO TIN (2)	TO TERMINATION SPEC. (1)	TO ITEM NO.	TO NO.
B 915E			TB17- 37AB	16N			107		P15-S	25N				
B 916	65			225		200	86 87 856			225		200	86 87 856	
B 916A	41		SHLD B 916	25N					TB17- 36CD	16N			107	
B 916B	41		P15-P	25N					SHLD B 916	25N				
B 916E			TB17- 36AB	16N			107		P15-R	25N				
B 917	65			225		200	86 87 856			225		200	86 87 856	
B 917A	41		SHLD B 917	25N					TB17- 35CD	16N			107	
B 917B	41		P15-D	25N					SHLD B 917	25N				
B 917E			TB17- 35AB	16N			107		P15-E	25N				
B 918	65			225		200	86 87 856			225		200	86 87 856	
B 918A	41		SHLD B 918	25N					TB17- 34CD	16N			107	
B 918B	41		P15-H	25N					SHLD B 918	25N				
B 918E			TB17- 34AB	16N			107		P15-J	25N				
B 919	65			225		200	86 87 856			225		200	86 87 856	
B 919A	41		SHLD B 919	25N					TB17- 33CD	16N			107	
B 919B	41		P15-B	25N					SHLD B 919	25N				
B 919E			TB17- 33AB	16N			107		P15-C	25N				
B 920	65			225		200	86 87 856			225		200	86 87 856	

(1) THE STD CONDUCTOR TERMINATION FIGURES ARE PER
(2) DIMENSIONS ARE IN INCHES AND TWO PLACE DECIMALS.

MIL 2565 - 4 85 WIR

MANNED SPACECRAFT CENTER HOUSTON, TEXAS | SIZE A | 1900943
SCALE - NONE | REV LTR AR | SHEET 119 OF 188

CONDUCTOR INDIVIDUAL LENGTH NUMBER	ITEM NO.	2	FROM CUT WIRE OR SHIELD STRIP WIRE OR JACKET CIRCUIT POINT 2	T I N	2	TERMINATION SPEC. 1 ITEM NO.	NO.	TO CUT WIRE OR SHIELD STRIP WIRE OR JACKET CIRCUIT POINT 2	T I N	2	TERMINATION SPEC. 1 ITEM NO.	NO.
B 920A	41		SHLD B 920	25N				TB17- 32CD	16N		107	
B 920B	41		P15-M	25N				SHLD B 920	25N			
B 920E			TB17- 32AB	16N		107		P15-N	25N			
B 921	65			225	200	86 87 856			225	200	86 87 856	
B 921A	41		SHLD B 921	25N				P14-G*	25N			
B 921B	41		TB17- 39CD	16N		107		SHLD B 921	25N			
B 921E			P14-F*	25N				TB17- 39AB	16		107	
B 922	65			225	200	86 87 856			225	200	86 87 856	
B 922A	41		SHLD B 922	25N				P14-R	25N			
B 922B	41		TB17- 38CD	16N		107		SHLD B 922	25N			
B 922E			P14-P	25N				TB17- 38AB	16N		107	
B 923	65			225	200	86 87 856			225	200	86 87 856	
B 923A	41		SHLD B 923	25N				P14-S*	25N			
B 923B	41		TB17- 31CD	16N		107		SHLD B 923	25N			
B 923E			P14-U*	25N				TB17- 31AB	16N		107	
B 924	65			225	200	86 87 856			225	200	86 87 856	
B 924A	41		SHLD B 924	25N				P15-EE	25N			
B 924B	41		TB17- 30CD	16N		107		SHLD B 924	25N			

1 THE STD CONDUCTOR TERMINATION FIGURES ARE PER
2 DIMENSIONS ARE IN INCHES AND TWO PLACE DECIMALS.

MANNED SPACECRAFT CENTER HOUSTON, TEXAS | SIZE A | 1900943
SCALE-NONE | REV LTR AR | SHEET 120 OF 188

MIL 2049 4-63 WIR

CONDUCTOR INDIVIDUAL LENGTH NUMBER	ITEM NO.	2	FROM CUT WIRE OR SHIELD STRIP WIRE OR JACKET CIRCUIT POINT 2	T I N	2	TERMINATION SPEC. 1 ITEM NO.	NO.	TO CUT WIRE OR SHIELD STRIP WIRE OR JACKET CIRCUIT POINT 2	T I N	2	TERMINATION SPEC. 1 ITEM NO.	NO.
B 924E			P15-FF	25N				TB17- 30AB	16N		107	
B 925			DELETE									
B 926	41		P99-R*	25N				P20-BB	25N			
B 927	42		P99-R	25N				P20-LL	25N			
B 928	42		P99-Y	25N				P20-EE	25N			
B 929	41		P99-X	25N				P20-FF	25N			
B 930	42		P99-J	25N				P20-MM	25N			
B 931	41		P99-M	25N				P20-GG	25N			
B 932			DELETE									
B 933	41		TB22- 95AB	16N		107		P20-JJ	25N			
B 934	41		P99-W	25N				P20-KK	25N			
B 935	42		J18-JJ	25N				P96-V	25N			
B 936	42		P31-K	25N				TB22- 40AB	16N		107	
B 937	42		P98-EE	25N				TB22- 2CD	16N		107	
B 938	46			225	200	85	7		400	370	48 52 846	
B 938B	41		TB22- 91	16N		107		SHLD B 938	25N			
B 938L			P84-J*	25N				TB22- 92CD	16N		107	
B 938R			P84-H*	25N				TB22- 92AB	16N		107	

1 THE STD CONDUCTOR TERMINATION FIGURES ARE PER
2 DIMENSIONS ARE IN INCHES AND TWO PLACE DECIMALS.

MANNED SPACECRAFT CENTER HOUSTON, TEXAS | SIZE A | 1900943
SCALE-NONE | REV LTR AR | SHEET 121 OF 188

MIL 2049 4-63 WIR

CONDUCTOR INDIVIDUAL LENGTH NUMBER	ITEM NO.	2	FROM CUT WIRE OR SHIELD STRIP WIRE OR JACKET CIRCUIT POINT 2	T I N	2	TERMINATION SPEC. 1 ITEM NO.	NO.	TO CUT WIRE OR SHIELD STRIP WIRE OR JACKET CIRCUIT POINT 2	T I N	2	TERMINATION SPEC. 1 ITEM NO.	NO.
B 939	46			225	200	85	7		400	370	48 52 846	
B 939B	41		TB22- 94	16N		107		SHLD B 939	25N			
B 939L			P86-J*	25N				TB22- 93CD	16N		107	
B 939R			P86-H*	25N				TB22- 93AB	16N		107	
B 940	46			225	200	85	7		400	370	48 52 846	
B 940B	41		TB22- 91	16N		107		SHLD B 940	25N			
B 940L			P83-R*	25N				TB22- 90CD	16N		107	
B 940R			P83-P*	25N				TB22- 90AB	16N		107	
B 941	42		J22-A*	25N				TB19- 98AB	16N		107	
B 942	65			225	200	86 87 856			225	200	86 87 856	
B 942A	41		SHLD B 942	25N				TB17- 25CD	16N		107	
B 942B	41		P14-E	25N				SHLD B 942	25N			
B 942E			TB17- 25AB	16N		107		P14-D	25N			
B 943	65			225	200	86 87 856			225	200	86 87 856	
B 943A	41		SHLD B 943	25N				P14-X*	25N			
B 943B	41		TB17- 29CD	16N		107		SHLD B 943	25N			
B 943E			P14-R*	25N				TB17- 29AB	16N		107	
B 944	65			225	200	86 87 856			225	200	86 87 856	

1 THE STD CONDUCTOR TERMINATION FIGURES ARE PER
2 DIMENSIONS ARE IN INCHES AND TWO PLACE DECIMALS.

MANNED SPACECRAFT CENTER HOUSTON, TEXAS | SIZE A | 1900943
SCALE-NONE | REV LTR AR | SHEET 122 OF 188

MIL 2049 4-63 WIR

CONDUCTOR INDIVIDUAL LENGTH NUMBER	ITEM NO.	2	FROM CUT WIRE OR SHIELD STRIP WIRE OR JACKET CIRCUIT POINT 2	T I N	2	TERMINATION SPEC. 1 ITEM NO.	NO.	TO CUT WIRE OR SHIELD STRIP WIRE OR JACKET CIRCUIT POINT 2	T I N	2	TERMINATION SPEC. 1 ITEM NO.	NO.
B 944A	41		SHLD B 944	25N				P15-Y*	25N			
B 944B	41		TB17- 28CD	16N		107		SHLD B 944	25N			
B 944E			P15-Z*	25N				TB17- 28AB	16N		107	
B 945	65			225	200	86 87 856			225	200	86 87 856	
B 945A	41		SHLD B 945	25N				P15-AA	25N			
B 945B	41		TB17- 27CD	16N		107		SHLD B 945	25N			
B 945E			P15-BB	25N				TB17- 27AB	16N		107	
B 946	65			225	200	86 87 856			225	200	86 87 856	
B 946A	41		SHLD B 946	25N				P15-CC	25N			
B 946B	41		TB17- 26CD	16N		107		SHLD B 946	25N			
B 946E			P15-DD	25N				TB17- 26AB	16N		107	
B 948	42		P24-B	25N				TB23- 11	20N		111	
B 949	42		P28-D	25N				TB23- 17	20N		111	
B 950	42		P37-K	25N				J24-R*	25N			
B 951	42		P37-M	25N				J24-S*	25N			
B 952	42		P37-T*	25N				J24-V*	25N			
B 953	42		P37-V*	25N				J24-BB	25N			
B 954	42		P37-P*	25N				J24-W*	25N			

1 THE STD CONDUCTOR TERMINATION FIGURES ARE PER
2 DIMENSIONS ARE IN INCHES AND TWO PLACE DECIMALS.

MANNED SPACECRAFT CENTER HOUSTON, TEXAS | SIZE A | 1900943
SCALE-NONE | REV LTR AR | SHEET 123 OF 188

MIL 2049 4-63 WIR

CONDUCTOR NUMBER	INDIVIDUAL LENGTH ITEM NO.	FROM CUT WIRE OR SHIELD STRIP WIRE OR JACKET CIRCUIT POINT	FROM TERMINATION SPEC. ITEM NO.	FROM NO.	TO CUT WIRE OR SHIELD STRIP WIRE OR JACKET CIRCUIT POINT	TO TERMINATION SPEC. ITEM NO.	TO NO.
B 955	42	P37-X*	25N		J24-Y*	25N	
B 956	42	P37-Z*	25N		J24-Q*	25N	
B 957	42	P37-BB	25N		J24-N*	25N	
B 958	42	P37-DD	25N		J24-P*	25N	
B 959	42	P37-I*	25N		J24-U*	25N	
B 960	46		225	200 85 7		225	200 48 52 845
B 960B	41	SHLD B 960	25N		E 26	25N	
B 960L		P37-NN	25N		J24-D	25N	
B 960R		P37-Z	25N		J24-C	25N	
B 961	42	P37-M*	25N		J24-X*	25N	
B 962	42	P37-L	25N		J24-T*	25N	
B 963	65		225	200 86 87 856		225	200 86 87 856
B 963A	41	SHLD B 963	25N		TB17- 10CD	16N	107
B 963B	41	P14-K	25N		SHLD B 963	25N	
B 963E		TB17- 10AB	16N	107	P14-L	25N	
B 964	65		225N	200 86 87 85 6		225N	200 86 87 85 6
B 964A	41	SHLD B 964	25N		P14-GG	25N	
B 964B	41	TB17- 13CD	25N	107	SHLD B 964	25N	

1> THE STD CONDUCTOR TERMINATION FIGURES ARE PER
2> DIMENSIONS ARE IN INCHES AND TWO PLACE DECIMALS.

MANNED SPACECRAFT CENTER HOUSTON, TEXAS | SIZE A | 1900943
SCALE - NONE | REV LTR AR | SHEET 124 OF 188

MIL 2085 - 4.85 WIR

CONDUCTOR NUMBER	INDIVIDUAL LENGTH ITEM NO.	FROM CUT WIRE OR SHIELD STRIP WIRE OR JACKET CIRCUIT POINT	FROM TERMINATION SPEC. ITEM NO.	FROM NO.	TO CUT WIRE OR SHIELD STRIP WIRE OR JACKET CIRCUIT POINT	TO TERMINATION SPEC. ITEM NO.	TO NO.
B 964E		P14-FF	25N		TB17- 13AB	16N	107
B 965	65		225N	200 86 87 85 6		225N	200 86 87 85 6
B 965A	41	SHLD B 965	25N		P14-HH	25N	
B 965B	41	TB17- 12CD	16N	107	SHLD B 965	25N	
B 965E		P14-CC	25N		TB17- 12AB	16N	107
B 966	65		225N	200 86 87 85 6		225	200 86 87 856
B 966A	41	SHLD B 966	25N		P15-B*	25N	
B 966B	41	TB17- 15CD	16N	107	SHLD B 966	25N	
B 966E		P15-A*	25N		TB17- 15AB	16N	107
B 967	65		225N	200 86 87 85 6		225	200 86 87 856
B 967A	41	SHLD B 967	25N		P14-EE	25N	
B 967B	41	TB17- 14CD	16N	107	SHLD B 967	25N	
B 967E		P14-DD	25N		TB17- 14AB	16N	107
B 968	12						
B 968L		J22-V	25N		TB21- 63AB	16N	107
B 968R		J22-U	25N		TB21- 47AB	16N	107
B 969	12						
B 969L		J22-X	25N		TB21- 60AB	16N	107

1> THE STD CONDUCTOR TERMINATION FIGURES ARE PER
2> DIMENSIONS ARE IN INCHES AND TWO PLACE DECIMALS.

MANNED SPACECRAFT CENTER HOUSTON, TEXAS | SIZE A | 1900943
SCALE - NONE | REV LTR AR | SHEET 125 OF 188

MIL 2085 - 4.85 WIR

CONDUCTOR NUMBER	INDIVIDUAL LENGTH ITEM NO.	FROM CUT WIRE OR SHIELD STRIP WIRE OR JACKET CIRCUIT POINT	FROM TERMINATION SPEC. ITEM NO.	FROM NO.	TO CUT WIRE OR SHIELD STRIP WIRE OR JACKET CIRCUIT POINT	TO TERMINATION SPEC. ITEM NO.	TO NO.
B 969R		J22-W	25N		TB21- 47CD	16N	107
B 970	12						
B 970L		J22-Z	25N		TB21- 57AB	16N	107
B 970R		J22-Y	25N		TB21- 44AB	16N	107
B 971	46		225	200 85 7		225	200 48 52 845
B 971B	41	SHLD B 971	25N		E 26	25N	
B 971L		P11-FF	25N		J22-T	25N	
B 971R		P11-X	25N		J22-S	25N	
B 972	42	P11-T	25N		J22-E	25N	
B 973	42	P11-R	25N		J22-C	25N	
B 974	42	P11-S	25N		J22-D	25N	
B 975	42	P11-V	25N		J22-AA	25N	
B 976	42	P11-W	25N		J22-BB	25N	
B 977	42	J21-U	25N		TB22- 2CD	16N	107
B 978	42	P37-H*	25N		J22-CC	25N	
B 979	42	P37-J*	25N		J22-DD	25N	
B 980	42	P37-N*	25N		J22-EE	25N	
B 982	42	P37-S*	25N		J22-GG	25N	

1> THE STD CONDUCTOR TERMINATION FIGURES ARE PER
2> DIMENSIONS ARE IN INCHES AND TWO PLACE DECIMALS.

MANNED SPACECRAFT CENTER HOUSTON, TEXAS | SIZE A | 1900943
SCALE - NONE | REV LTR AR | SHEET 126 OF 188

MIL 2085 - 4.85 WIR

CONDUCTOR NUMBER	INDIVIDUAL LENGTH ITEM NO.	FROM CUT WIRE OR SHIELD STRIP WIRE OR JACKET CIRCUIT POINT	FROM TERMINATION SPEC. ITEM NO.	FROM NO.	TO CUT WIRE OR SHIELD STRIP WIRE OR JACKET CIRCUIT POINT	TO TERMINATION SPEC. ITEM NO.	TO NO.
B 983	42	P37-U*	25N		J22-HH	25N	
B 984	42	P37-W*	25N		J22-W*	25N	
B 985	42	P37-Y*	25N		J22-X*	25N	
B 986	42	P37-AA	25N		J22-Y*	25N	
B 987	42	P37-CC	25N		J22-Z*	25N	
B 988	42	J16-JJ	25N		TB21- 5AB	16N	107
B 989	42	J16-HH	25N		TB21- 5CD	16N	107
B 990	40	J26-AA	25N	157	TB 9- 1	20N	111
B 991	65		225	200 86 87 856		225	200 86 87 856
B 991A	41	SHLD B 991	25N		TB17-16CD	16N	107
B 991B	41	P14-Y	25N		SHLD B 991	25N	
B 991E		TB17-16AB	16N	107	P14-Z	25N	
B 992	42	P14-E*	25N		TB17- 1AB	16N	107
B 993	44		225N	200 83		300	270 51 55 83
B 993B	41	E 48	25N		SHLD B 993	25N	
B 993L		P99-N*	25N		P90-F	25N	
B 993R		P99-M*	25N		P90-G	25N	
B 994	42	P24-S	25N		J20-M	25N	

1> THE STD CONDUCTOR TERMINATION FIGURES ARE PER
2> DIMENSIONS ARE IN INCHES AND TWO PLACE DECIMALS.

MANNED SPACECRAFT CENTER HOUSTON, TEXAS | SIZE A | 1900943
SCALE - NONE | REV LTR AR | SHEET 127 OF 188

MIL 2085 - 4.85 WIR

CONDUCTOR INDIVIDUAL LENGTH NUMBER	ITEM NO.	FROM CUT WIRE OR SHIELD STRIP WIRE OR JACKET CIRCUIT POINT	TIN	TERMINATION SPEC. ITEM NO.	NO.	TO CUT WIRE OR SHIELD STRIP WIRE OR JACKET CIRCUIT POINT	TIN	TERMINATION SPEC. ITEM NO.	NO.
B 995	42	P24-C*	25N			J20-C	25N		
B 999	40	P 4-A	25N			TB25- 9	20N	111	
B1000	42	J22-D*	25N			TB22- 2AB	16N	107	
B1001	41	P24-A	25N			TB25- 10	20N	111	
B1006	07		225	200120	7		225	200117118 856	
B1006B	41	TB22-100	16N	107		SHLD B1006	25N		
B1006W		P36-F*	25N			TB22- 99AB	16N	107	
B1007	07		225	200120	7		225	200117118 856	
B1007B	41	TB21-100	16N	107		SHLD B1007	25N		
B1007W		P36-D*	25N			TB21- 99AB	16N	107	
B1008	07		225	200120	7		225	200117118 856	
B1008B	41	TB21- 97	16N	107		SHLD B1008	25N		
B1008W		P36-B*	25N			TB21- 98AB	16N	107	
B1009	42	P92-B*	25N			J18-N*	25N		
B1010	42	P92-A*	25N			J18-M*	25N		
B1011	42	P92-Y	25N			J18-K*	25N		
B1012	42	P96-A	25N			J21-R*	25N		
B1013	42	P96-B	25N			J21-Q*	25N		

1 THE STD CONDUCTOR TERMINATION FIGURES ARE PER
2 DIMENSIONS ARE IN INCHES AND TWO PLACE DECIMALS.

MANNED SPACECRAFT CENTER HOUSTON, TEXAS | SIZE A | 1900943
SCALE - NONE | REV LTR AR | SHEET 128 OF 188

MIL 2069 - 2-65 WIR

CONDUCTOR INDIVIDUAL LENGTH NUMBER	ITEM NO.	FROM CUT WIRE OR SHIELD STRIP WIRE OR JACKET CIRCUIT POINT	TIN	TERMINATION SPEC. ITEM NO.	NO.	TO CUT WIRE OR SHIELD STRIP WIRE OR JACKET CIRCUIT POINT	TIN	TERMINATION SPEC. ITEM NO.	NO.
B1014	42	P96-C	25N			J21-P*	25N		
B1015	42	P96-D	25N			J21-N*	25N		
B1016	42	P96-E	25N			J21-M*	25N		
B1017	42	P96-G	25N			J21-B*	25N		
B1018	42	P96-H	25N			J21-C*	25N		
B1019	42	P96-J	25N			J21-D*	25N		
B1020	42	P96-K	25N			J21-E*	25N		
B1021	42	P96-L	25N			J21-F*	25N		
B1022	42	P96-M	25N			J21-G*	25N		
B1023	42	P96-N	25N			J21-H*	25N		
B1024	42	P96-P	25N			J21-J*	25N		
B1025	42	P96-R	25N			J21-K*	25N		
B1026	42	P96-S	25N			J21-A*	25N		
B1027	42	P96-X	25N			J21-U*	25N		
B1028	42	J25-CC	25N			TB17- 93AB	16N	107	
B1029	42	J25-DD	25N			TB17- 92AB	16N	107	
B1030	42	P36-H	25N			J18-P*	25N		
B1031	42	P36-G	25N			J18-T*	25N		

1 THE STD CONDUCTOR TERMINATION FIGURES ARE PER
2 DIMENSIONS ARE IN INCHES AND TWO PLACE DECIMALS.

MANNED SPACECRAFT CENTER HOUSTON, TEXAS | SIZE A | 1900943
SCALE - NONE | REV LTR AR | SHEET 129 OF 188

MIL 2069 - 2-65 WIR

CONDUCTOR INDIVIDUAL LENGTH NUMBER	ITEM NO.	FROM CUT WIRE OR SHIELD STRIP WIRE OR JACKET CIRCUIT POINT	TIN	TERMINATION SPEC. ITEM NO.	NO.	TO CUT WIRE OR SHIELD STRIP WIRE OR JACKET CIRCUIT POINT	TIN	TERMINATION SPEC. ITEM NO.	NO.
B1032	42	P36-F	25N			J18-Y	25N		
B1033	42	P36-Z	25N			J18-KK	25N		
B1035	41	J26-C*	25N			TB20- 4AB	16N	107	
B1036	42	J26-D*	25N			TB20- 40CD	16N	107	
B1037	41	TB20- 14AB	16N	107		P17-Y*	25N		
B1038	42	P16-CC	25N			TB20- 13AB	16N	107	
B1040	46		225	200 85			225	200 48 52 845	
B1040B	41	E 26	25N			SHLD B1040	25N		
B1040L		P35-J	25N			J24-D*	25N		
B1040R		P35-H	25N			J24-C*	25N		
B1041	46		225	200 85			225	200 48 52 845	
B1041B	41	E 26	25N			SHLD B1041	25N		
B1041L		P35-G	25N			J24-A*	25N		
B1041R		P35-F	25N			J24-B*	25N		
B1042	46		225	200 85			225	200 48 52 845	
B1042B	41	E 26	25N			SHLD B1042	25N		
B1042L		P35-E	25N			J24-H*	25N		
B1042R		P35-D	25N			J24-G*	25N		

1 THE STD CONDUCTOR TERMINATION FIGURES ARE PER
2 DIMENSIONS ARE IN INCHES AND TWO PLACE DECIMALS.

MANNED SPACECRAFT CENTER HOUSTON, TEXAS | SIZE A | 1900943
SCALE - NONE | REV LTR AR | SHEET 130 OF 188

MIL 2069 - 2-65 WIR

CONDUCTOR INDIVIDUAL LENGTH NUMBER	ITEM NO.	FROM CUT WIRE OR SHIELD STRIP WIRE OR JACKET CIRCUIT POINT	TIN	TERMINATION SPEC. ITEM NO.	NO.	TO CUT WIRE OR SHIELD STRIP WIRE OR JACKET CIRCUIT POINT	TIN	TERMINATION SPEC. ITEM NO.	NO.
B1043	46		225	200 85			225	200 48 52 845	
B1043B	41	E 26	25N			SHLD B1043	25N		
B1043L		P35-C	25N			J24-F*	25N		
B1043R		P35-B	25N			J24-E*	25N		
B1044	41	J26-J*	25N			TB20- 32AB	16N	107	
B1045	41	J26-E*	25N			TB20- 31AB	16N	107	
B1046	65		225	200 86 87 856			225	200 86 87 856	
B1046A	41	SHLD B1046	25N			P25-V*	25N		
B1046B	41	TB17- 22CD	16N	107		SHLD B1046	25N		
B1046E		P25-U*	25N			TB17- 22AB	16N	107	
B1047	65		225	200 86 87 85 6			225	200 86 87 85 6	
B1047A	41	SHLD B1047	25N			P25-Z*	25N		
B1047B		TB17- 21CD	16N	107		SHLD B1047	25N		
B1047E		P25-Y*	25N			TB17- 21AB	16	107	
B1048	46		225	200 85 7			400	370 48 52 846	
B1048B	41	TB17- 50	16N	107		SHLD B1048	25N		
B1048L		P26-P*	25N			TB17- 23CD	16N	107	
B1048R		P26-N*	25N			TB17- 23AB	16N	107	

1 THE STD CONDUCTOR TERMINATION FIGURES ARE PER
2 DIMENSIONS ARE IN INCHES AND TWO PLACE DECIMALS.

MANNED SPACECRAFT CENTER HOUSTON, TEXAS | SIZE A | 1900943
SCALE - NONE | REV LTR AR | SHEET 131 OF 188

MIL 2069 - 2-65 WIR

CONDUCTOR NUMBER	INDIVIDUAL LENGTH ITEM NO.	2	FROM CIRCUIT POINT	3	TI NU	2	TERMINATION SPEC. 1 ITEM NO.	NO.	TO CIRCUIT POINT	3	TI NU	2	TERMINATION SPEC. 1 ITEM NO.	NO.
B1049	46			225		200	85			400		370	48 52 846	
B1049B	41		E 59	25N					SHLD B1049	25N				
B1049L			P24-K*	25N					P98-X*	25N				
B1049R			P24-J*	25N					P98-W*	25N				
B1050	7			225		200	117 118 855			225		200	120 7	
B1050A	41		SHLD B1050	25N					E 32	25N				
B1050L			DELETE											
B1050W			P36-Q*	25N					J22-R*	25N				
B1051	42		P36-AA	25N					J22-T*	25N				
B1052	42		P36-DD	25N					J22-F	25N				
B1053	42		P36-BB	25N					J22-K*	25N				
B1054	42		P36-EE	25N					TB20- 7AB	16N			107	
B1056	42		P36-GG	25N					TB21- 4CD	16N			107	
B1057	42		P36-W*	25N					TB18-100CD	16N			107	
B1058	42		P36-X*	25N					TB18-100AB	16N			107	
B1059	42		P35-A*	25N					J22-B*	25N				
B1060	42		P98-GG	25N					J16-D*	25N				
B1061	42		P98-HH	25N					J16-E*	25N				

1 THE STD CONDUCTOR TERMINATION FIGURES ARE PER
2 DIMENSIONS ARE IN INCHES AND TWO PLACE DECIMALS.

MANNED SPACECRAFT CENTER HOUSTON, TEXAS | SIZE A | 1900943
SCALE - NONE | REV LTR AR | SHEET 132 OF 188

MIL 2049 - 4-63 WIR

CONDUCTOR NUMBER	INDIVIDUAL LENGTH ITEM NO.	2	FROM CIRCUIT POINT	3	TI NU	2	TERMINATION SPEC. 1 ITEM NO.	NO.	TO CIRCUIT POINT	3	TI NU	2	TERMINATION SPEC. 1 ITEM NO.	NO.
B1062	42		P98-FF	25N					TB22- 96	16N			107	
B1063	42		P98-T*	25N					P36-M*	25N				
B1064	41		J26-H*	25N					TB20- 23AB	16N			107	
B1065	41		J26-G*	25N					TB20- 22AB	16N			107	
B1066	41		J26-I*	25N					TB20- 29AB	16N			107	
B1067	41		J26-F*	25N					TB20- 28AB	16N			107	
B1068	41		J26-GG	25N					TB20- 26AB	16N			107	
B1069	41		J26-HH	25N					TB20- 25AB	16N			107	
B1070	42		P25-C*	25N					TB20- 66AB	16N			107	
B1071	42		P25-D*	25N					TB20- 66CD	16N			107	
B1072	42		P35-BB	25N					J25-S*	25N				
B1073	44			225		200	85			225		200	48 52 845	
B1073B	41		E 25	25N					SHLD B1073	25N				
B1073L			P35-S*	25N					J25-Z*	25N				
B1073R			P35-T*	25N					J25-Y*	25N				
B1074	45			225		200	84 7			400		370	50 54 846	
B1074B	41		TB20- 18	16N			107		SHLD B1074	25N				
B1074L			J26-U*	25N					TB20- 17CD	16N			108	

1 THE STD CONDUCTOR TERMINATION FIGURES ARE PER
2 DIMENSIONS ARE IN INCHES AND TWO PLACE DECIMALS.

MANNED SPACECRAFT CENTER HOUSTON, TEXAS | SIZE A | 1900943
SCALE - NONE | REV LTR AR | SHEET 133 OF 188

MIL 2049 - 4-63 WIR

CONDUCTOR NUMBER	INDIVIDUAL LENGTH ITEM NO.	2	FROM CIRCUIT POINT	3	TI NU	2	TERMINATION SPEC. 1 ITEM NO.	NO.	TO CIRCUIT POINT	3	TI NU	2	TERMINATION SPEC. 1 ITEM NO.	NO.
B1074R			J26-T*	25N					TB20- 17AB	16N			108	
B1076	42		TB17- 89AB	25N					J18-H*	25N				
B1077	42		P98-E	25N					J18-G*	25N				
B1078	42		P34-HH	25N					J18-B*	25N				
B1079	42		P34-GG	25N					J18-A*	25N				
B1080	42		P34-FF	25N					J18-C*	25N				
B1081	42		P34-EE	25N					J18-D*	25N				
B1082	42		P34-DD	25N					J18-F*	25N				
B1083	42		P34-CC	25N					J18-E*	25N				
B1084	42		P98-N*	25N					J21-Z*	25N				
B1085	42		P98-G*	25N					J21-HH	25N				
B1086	42		P98-DD	25N					J21-EE	25N				
B1087	42		P98-H*	25N					J21-V	25N				
B1088	42		P98-J*	25N					J21-L	25N				
B1089	42		P98-CC	25N					J21-M	25N				
B1090	42		P98-I*	25N					J21-X*	25N				
B1091	42		P98-V	25N					J21-GG	25N				
B1092	42		P98-U	25N					J21-DD	25N				

1 THE STD CONDUCTOR TERMINATION FIGURES ARE PER
2 DIMENSIONS ARE IN INCHES AND TWO PLACE DECIMALS.

MANNED SPACECRAFT CENTER HOUSTON, TEXAS | SIZE A | 1900943
SCALE - NONE | REV LTR AR | SHEET 134 OF 188

MIL 2049 - 4-63 WIR

CONDUCTOR NUMBER	INDIVIDUAL LENGTH ITEM NO.	2	FROM CIRCUIT POINT	3	TI NU	2	TERMINATION SPEC. 1 ITEM NO.	NO.	TO CIRCUIT POINT	3	TI NU	2	TERMINATION SPEC. 1 ITEM NO.	NO.
B1093	42		P98-T	25N					J21-N	25N				
B1094	42		P98-S	25N					J21-J	25N				
B1095	42		P98-R	25N					J21-K	25N				
B1096	42		P99-L	25N					J18-MM	25N				
B1097	42		P99-T*	25N					J18-AA	25N				
B1098	42		P99-S*	25N					J18-BB	25N				
B1099	42		P98-BB	25N					J21-Z	25N				
B1100	42		P98-Y*	25N					J21-Y	25N				
B1101	42		P99-FF	25N					J21-S	25N				
B1102	42		P98-S*	25N					J21-FF	25N				
B1103	42		P98-R*	25N					J21-Y*	25N				
B1104	42		P98-P*	25N					J21-AA	25N				
B1105	42		P98-M*	25N					J21-BB	25N				
B1106	42		P34-K	25N					J18-PP	25N				
B1107	42		P99-B*	25N					J18-Z	25N				
B1108	46			225		200	85 7			400		370	48 52 846	
B1108B	41		TB18- 99	16N			107		SHLD B1108	25N				
B1108L			P25-GG	25N					TB21- 71	16N			107	

1 THE STD CONDUCTOR TERMINATION FIGURES ARE PER
2 DIMENSIONS ARE IN INCHES AND TWO PLACE DECIMALS.

MANNED SPACECRAFT CENTER HOUSTON, TEXAS | SIZE A | 1900943
SCALE - NONE | REV LTR AR | SHEET 135 OF 188

MIL 2049 - 4-63 WIR

CONDUCTOR INDIVIDUAL LENGTH NUMBER	ITEM NO.	2	FROM CUT WIRE OR SHIELD STRIP WIRE OR JACKET CIRCUIT POINT	2	T I N	2	TERMINATION SPEC. 1 ITEM NO.	NO.	TO CUT WIRE OR SHIELD STRIP WIRE OR JACKET CIRCUIT POINT	2	T I N	2	TERMINATION SPEC. 1 ITEM NO.	NO.
B1108R			P25-EE	25N					TB18-100AB	16N			107	
B1109	46			225		200	85	7		400		370	48 52 846	
B1109B	41		TB18- 99	16N			107		SHLD B1109	25N				
B1109L			P25-DD	25N					TB21- 77CD	16N			107	
B1109R			P25-CC	25N					TB18-100CD	16N			107	
B1110	41		P92-L	25N					TB23- 13	16N				
B1111	46			225		200	85	7		400		370	48 52 846	
B1111B	41		TB18- 99	16N			107		SHLD B1111	25N				
B1111L			P25-HH	25N					TB18- 98CD	16N			107	
B1111R			P25-FF	25N					TB18- 97CD	16N			107	
B1112	42		P24-CC	25N					TB20- 40AB	16N			107	
B1113	42		P24-DD	25N					TB20- 40CD	16N			107	
B1114	41		P11-D*	25N					TB22- 23AB	16N			107	
B1115	41		P11-E*	25N					TB22- 25AB	16N			107	
B1116	41		P11-F*	25N					TB22- 20AB	16N			107	
B1117	45			225		200	84	7		400		370	50 54 846	
B1117B	41		TB22- 21	16N			107		SHLD B1117	25N				
B1117L			P11-C*	25N					TB22- 23CD	16N			108	

1 THE STD CONDUCTOR TERMINATION FIGURES ARE PER
2 DIMENSIONS ARE IN INCHES AND TWO PLACE DECIMALS.

MANNED SPACECRAFT CENTER HOUSTON, TEXAS | SIZE A | 1900943
SCALE - NONE | REV LTR AR | SHEET 136 OF 188

MIL 2089 - 4-65 WIR

CONDUCTOR INDIVIDUAL LENGTH NUMBER	ITEM NO.	2	FROM CUT WIRE OR SHIELD STRIP WIRE OR JACKET CIRCUIT POINT	2	T I N	2	TERMINATION SPEC. 1 ITEM NO.	NO.	TO CUT WIRE OR SHIELD STRIP WIRE OR JACKET CIRCUIT POINT	2	T I N	2	TERMINATION SPEC. 1 ITEM NO.	NO.
B1117R			P11-G*	25N					TB22-22AB	16N			108	
B1118	42		P99-E	25N					J25-D*	25N				
B1119	42		P92-M	25N					J25-E*	25N				
B1120	42		P31-G	25N					J18-Q*	25N				
B1121	42		P31-H	25N					J18-U*	25N				
B1122	42		P31-N	25N					J18-X*	25N				
B1123	42		P31-CC	25N					J18-S*	25N				
B1124	42		P31-EE	25N					J18-R*	25N				
B1125	42		P31-AA	25N					J18-W*	25N				
B1126	42		P31-Z*	25N					J18-V*	25N				
B1127	42		P31-T*	25N					J18-Z*	25N				
B1128	42		P31-Y*	25N					J18-Y*	25N				
B1129	42		P40-B*	25N					P47-J*	25N				
B1130	42		P40-U*	25N					P47-N*	25N				
B1131	42		P40-V*	25N					P47-F*	25N				
B1132	42		P40-W*	25N					P47-G*	25N				
B1133	42		P40-X*	25N					P47-K*	25N				
B1134	42		P40-Y*	25N					P47-W	25N				

1 THE STD CONDUCTOR TERMINATION FIGURES ARE PER
2 DIMENSIONS ARE IN INCHES AND TWO PLACE DECIMALS.

MANNED SPACECRAFT CENTER HOUSTON, TEXAS | SIZE A | 1900943
SCALE - NONE | REV LTR AR | SHEET 137 OF 188

MIL 2089 - 4-65 WIR

CONDUCTOR INDIVIDUAL LENGTH NUMBER	ITEM NO.	2	CUT WIRE OR STRIP WIRE OR JAC CIRCUIT POINT	2	T I N	NO.	TO CUT WIRE OR SHIELD STRIP WIRE OR JACKET CIRCUIT POINT	2	T I N	2	TERMINATION SPEC. 1 ITEM NO.	NO.
B1135	42		P40-Z*	25N			P47-X	25N				
B1136	42		P40-AA	25N			P47-Z	25N				
B1137	42		P40-BB	25N			P47-A*	25N				
B1138	42		P40-CC	25N			P47-M	25N				
B1139	42		P40-DD	25N			P47-P	25N				
B1140	42		P40-EE	25N			P47-S	25N				
B1141	42		P40-FF	25N			P47-V	25N				
B1142	42		P40-GG	25N			P47-H	25N				
B1143	42		P40-HH	25N			P47-J	25N				
B1144	42		P40-JJ	25N			P47-K	25N				
B1145	42		P40-KK	25N			P47-L	25N				
B1146	42		P40-LL	25N			P47-B	25N				
B1147	42		P40-MM	25N			P47-C	25N				
B1148	42		P40-NN	25N			P47-D	25N				
B1149	42		P40-PP	25N			P47-F	25N				
B1150	42		P40-N*	25N			P47-B*	25N				
B1151	42		P40-P*	25N			P47-C*	25N				
B1152	42		P40-Q*	25N			P47-D*	25N				

1 THE STD CONDUCTOR TERMINATION FIGURES ARE PER
2 DIMENSIONS ARE IN INCHES AND TWO PLACE DECIMALS.

MANNED SPACECRAFT CENTER HOUSTON, TEXAS | SIZE A | 1900943
SCALE - NONE | REV LTR AR | SHEET 138 OF 188

MIL 2089 - 4-65 WIR

CONDUCTOR INDIVIDUAL LENGTH NUMBER	ITEM NO.	2	FROM CUT WIRE OR SHIELD STRIP WIRE OR JACKET CIRCUIT POINT	2	T I N	2	TERMINATION SPEC. 1 ITEM NO.	NO.	TO CUT WIRE OR SHIELD STRIP WIRE OR JACKET CIRCUIT POINT	2	T I N	2	TERMINATION SPEC. 1 ITEM NO.	NO.
B1153	42		P40-R*	25N					P47-E*	25N				
B1154	46			225		200	48 52 845			225		200	85	7
B1154A	41		SHLD B1154	25N					E 34	25N				
B1154L			P32-Z*	25N					J17-W*	25N				
B1154R			P32-Y*	25N					J17-V*	25N				
B1155	46			225		200	48 52 845			225		200	85	7
B1155A	41		SHLD B1155	25N					E 34	25N				
B1155L			P32-LL	25N					J17-U*	25N				
B1155R			P32-KK	25N					J17-T*	25N				
B1156	46			225		200	48 52 845			225		200	85	7
B1156A	41		SHLD B1156	25N					E 34	25N				
B1156L			P32-M*	25N					J17-BB	25N				
B1156R			P32-M	25N					J17-AA	25N				
B1157	46			225		200	48 52 845			225		200	85	7
B1157A	41		SHLD B1157	25N					E 35	25N				
B1157L			P32-H*	25N					J17-N*	25N				
B1157R			P32-H	25N					J17-M*	25N				
B1158	46			225		200	48 52 845			225		200	85	7

1 THE STD CONDUCTOR TERMINATION FIGURES ARE PER
2 DIMENSIONS ARE IN INCHES AND TWO PLACE DECIMALS.

MANNED SPACECRAFT CENTER HOUSTON, TEXAS | SIZE A | 1900943
SCALE - NONE | REV LTR AR | SHEET 139 OF 188

MIL 2089 - 4-65 WIR

CONDUCTOR INDIVIDUAL LENGTH NUMBER	ITEM NO.	2	FROM CUT WIRE OR SHIELD STRIP WIRE OR JACKET CIRCUIT POINT 2	TIN 2	TERMINATION SPEC. 1 ITEM NO.	NO.	TO CUT WIRE OR SHIELD STRIP WIRE OR JACKET CIRCUIT POINT 2	TIN 2	TERMINATION SPEC. 1 ITEM NO.	NO.
B1158A	41		SHLD B1158	25N			E 35	25N		
B1158L			P32-J*	25N			J17-K*	25N		
B1158R			P32-J	25N			J17-J*	25N		
B1159	46			225	200 48 52 845			225	200 85 7	
B1159A	41		SHLD B1159	25N			E 35	25N		
B1159L			P32-F*	25N			J17-S*	25N		
B1159R			P32-F	25N			J17-R*	25N		
B1160	46			225	200 48 52 845			225	200 85 7	
B1160A	41		SHLD B1160	25N			E 36	25N		
B1160L			P32-D*	25N			J17-B*	25N		
B1160R			P32-D	25N			J17-A*	25N		
B1161	46			225	200 48 52 845			225	200 85 7	
B1161A	41		SHLD B1161	25N			E 36	25N		
B1161L			P32-C*	25N			J17-D*	25N		
B1161R			P32-C	25N			J17-C*	25N		
B1162	46			225	200 48 52 845			225	200 85 7	
B1162A	41		SHLD B1162	25N			E 36	25N		
B1162L			P32-AA	25N			J17-Y*	25N		

1 THE STD CONDUCTOR TERMINATION FIGURES ARE PER
2 DIMENSIONS ARE IN INCHES AND TWO PLACE DECIMALS.

MANNED SPACECRAFT CENTER HOUSTON, TEXAS | SIZE A | 1900943
SCALE-NONE | REV LTR AR | SHEET 140 OF 188

MIL 2049 4-63 WIR

CONDUCTOR INDIVIDUAL LENGTH NUMBER	ITEM NO.	2	FROM CUT WIRE OR SHIELD STRIP WIRE OR JACKET CIRCUIT POINT 2	TIN 2	TERMINATION SPEC. 1 ITEM NO.	NO.	TO CUT WIRE OR SHIELD STRIP WIRE OR JACKET CIRCUIT POINT 2	TIN 2	TERMINATION SPEC. 1 ITEM NO.	NO.
B1162R			P32-BB	25N			J17-X*	25N		
B1163	46			225	200 48 52 845			225	200 85 7	
B1163A	41		SHLD B1163	25N			E 35	25N		
B1163L			P32-G	25N			J17-Q*	25N		
B1163R			P32-G*	25N			J17-P*	25N		
B1164	46			225	200 48 52 845			225	200 85 7	
B1164A	41		SHLD B1164	25N			E 36	25N		
B1164L			P32-B	25N			J17-F*	25N		
B1164R			P32-B*	25N			J17-E*	25N		
B1165	42		P98-U*	25N			TB23- 14	16N		
B1166	42		P99-P	25N			J26-S*	25N		
B1167	42		P34-C	25N			J26-X*	25N		
B1168	42		P34-B	25N			J26-Y*	25N		
B1169	42		P34-E	25N			J26-Z*	25N		
B1170	42		P34-G	25N			J26-CC	25N		
B1171	42		P34-M	25N			TB19- 3AB	17N	107	
B1172	42		P34-E*	25N			J26-R*	25N		
B1173	42		P99-K	25N			J26-DD	25N		

1 THE STD CONDUCTOR TERMINATION FIGURES ARE PER
2 DIMENSIONS ARE IN INCHES AND TWO PLACE DECIMALS.

MANNED SPACECRAFT CENTER HOUSTON, TEXAS | SIZE A | 1900943
SCALE-NONE | REV LTR AR | SHEET 141 OF 188

MIL 2049 4-63 WIR

CONDUCTOR INDIVIDUAL LENGTH NUMBER	ITEM NO.	2	FROM CUT WIRE OR SHIELD STRIP WIRE OR JACKET CIRCUIT POINT 2	TIN 2	TERMINATION SPEC. 1 ITEM NO.	NO.	TO CUT WIRE OR SHIELD STRIP WIRE OR JACKET CIRCUIT POINT 2	TIN 2	TERMINATION SPEC. 1 ITEM NO.	NO.
B1174	42		P99-F	25N			J26-W*	25N		
B1175	42		P41-A	25N			TB18-83AB	16N	107	
B1176	42		P41-B	25N			P 5-C	25N		
B1177	42		P41-C	25N			P 5-D	25N		
B1178	42		P41-D	25N			P 5-E	25N		
B1179	42		P39-LL	25N			P 5-H	25N		
B1180	42		P39-MM	25N			P 5-J	25N		
B1181	42		P39-NN	25N			P 5-K	25N		
B1182	42		P39-PP	25N			P 5-L	25N		
B1183	42		P39-GG	25N			P 5-P	25N		
B1184	42		P39-HH	25N			P 5-R	25N		
B1185	42		P39-JJ	25N			P 5-S	25N		
B1186	42		P39-KK	25N			P 5-T	25N		
B1187	42		P39-CC	25N			P 5-W	25N		
B1188	42		P39-DD	25N			P 5-X	25N		
B1189	42		P39-EE	25N			P 5-Y	25N		
B1190	42		P39-FF	25N			P 5-Z	25N		
B1191	42		P39-Y*	25N			P 5-B*	25N		

1 THE STD CONDUCTOR TERMINATION FIGURES ARE PER
2 DIMENSIONS ARE IN INCHES AND TWO PLACE DECIMALS.

MANNED SPACECRAFT CENTER HOUSTON, TEXAS | SIZE A | 1900943
SCALE-NONE | REV LTR AR | SHEET 142 OF 188

MIL 2049 4-63 WIR

CONDUCTOR INDIVIDUAL LENGTH NUMBER	ITEM NO.	2	FROM CUT WIRE OR SHIELD STRIP WIRE OR JACKET CIRCUIT POINT 2	TIN 2	TERMINATION SPEC. 1 ITEM NO.	NO.	TO CUT WIRE OR SHIELD STRIP WIRE OR JACKET CIRCUIT POINT 2	TIN 2	TERMINATION SPEC. 1 ITEM NO.	NO.
B1192	42		P39-Z*	25N			P 5-C*	25N		
B1193	42		P39-AA	25N			P 5-D*	25N		
B1194	42		P39-BB	25N			P 5-E*	25N		
B1195	42		P39-U*	25N			P 5-G*	25N		
B1196	42		P39-V*	25N			P 5-H*	25N		
B1197	42		P39-W*	25N			P 5-I*	25N		
B1198	42		P39-X*	25N			P 5-J*	25N		
B1199	42		P39-S*	25N			P 5-R*	25N		
B1200	42		P39-P*	25N			P 5-S*	25N		
B1201	42		P39-R*	25N			TB18-83CD	16N	107	
B1202	42		P39-T*	25N			P 5-P*	25N		
B1203	46			225	200 85 7			400	370 48 52 846	
B1203B	41		TB20- 6	16N	107		SHLD B1203	25N		
B1203L			P25-PP	25N			TB20- 8CD	16N	107	
B1203R			P25-MM	25N			TB20- 7AB	16N	107	
B1204	46			225	200 85 7			400	370 48 52 846	
B1204B	41		TB21- 3	16N	107		SHLD B1204	25N		
B1204L			P25-NN	25N			TB21- 7CD	16N	107	

1 THE STD CONDUCTOR TERMINATION FIGURES ARE PER
2 DIMENSIONS ARE IN INCHES AND TWO PLACE DECIMALS.

MANNED SPACECRAFT CENTER HOUSTON, TEXAS | SIZE A | 1900943
SCALE-NONE | REV LTR AR | SHEET 143 OF 188

MIL 2049 4-63 WIR

CONDUCTOR NUMBER	INDIVIDUAL LENGTH ITEM NO.	2	FROM CUT WIRE OR SHIELD STRIP WIRE OR JACKET CIRCUIT POINT	3	T I N	2	TERMINATION SPEC. 1 ITEM NO.						NO.	TO CUT WIRE OR SHIELD STRIP WIRE OR JACKET CIRCUIT POINT	3	T I N	2	TERMINATION SPEC. 1 ITEM NO.						NO.
B1204R			P25-LL	25N										TB21- 4CD	16N			107							
B1205	46			225		200	85			7					400		370	48	52	846					
B1205B	41		TB21- 9	16N			107							SHLD B1205	25N										
B1205L			P25-KK	25N										TB21- 8CD	16N			107							
B1205R			P25-JJ	25N										TB21- 40CD	16N			107							
B1206	46			225		200	85								400		370	48	52	846					
B1206B	41		TB22- 27	16N			107							SHLD B1206	25N										
B1206L			P25-R*	25N										TB22- 26CD	16N			107							
B1206R			P25-P*	25N										TB22- 26AB	16N			107							
B1207	46			225		200	85								400		370	48	52	846					
B1207B	41		TB22- 27	16N			107							SHLD B1207	25N										
C1207L			P25-Q*	25N										TB22- 28CD	16N			107							
B1207R			P25-N*	25N										TB22- 28AB	16N			107							
B1208	46			225		200	85								400		370	48	52	846					
B1208B	41		TB22- 30	16N			107							SHLD B1208	25N										
B1208L			P25-M*	25N										TB22- 29CD	16N			107							
B1208R			P25-K*	25N										TB22- 29AB	16N			107							
B1209	42		P24-Z	25N										TB21- 4AB	16N			107							

1 THE STD CONDUCTOR TERMINATION FIGURES ARE PER
2 DIMENSIONS ARE IN INCHES AND TWO PLACE DECIMALS.

MANNED SPACECRAFT CENTER HOUSTON, TEXAS | SIZE A | 1900943
SCALE-NONE | REV LTR AR | SHEET 144 OF 188

MIL 2085 - 4-65 WIR

CONDUCTOR NUMBER	INDIVIDUAL LENGTH ITEM NO.	2	FROM CUT WIRE OR SHIELD STRIP WIRE OR JACKET CIRCUIT POINT	3	T I N	2	TERMINATION SPEC. 1 ITEM NO.						NO.	TO CUT WIRE OR SHIELD STRIP WIRE OR JACKET CIRCUIT POINT	3	T I N	2	TERMINATION SPEC. 1 ITEM NO.						NO.
B1210	40		J26-BB	25N			157							TB12- 10	20N			111							
B1211	42		P24-K	25N										TB22- 2CD	16N			107							
B1213	42		P31-P	25N										P98-G	25N										
B1214	42		P31-R	25N										P98-C*	25N										
B1215	42		P31-U	25N										P98-H	25N										
B1216	42		P31-X	25N										P98-N	25N										
B1217	42		P31-C*	25N										P98-J	25N										
B1218	40		P92-M*	25N			157							TB 7- 4	20N			111							
B1219	46			400		370	48	52	846						225		200	85			7				
B1219A	41		SHLD B1219	25N										TB27- 22	16N			107							
B1219L			TB27- 21CD	16N			107							P65-B*	25N										
B1219R			TB27- 21AB	16N			107							P65-B	25N										
B1220	46			400		370	48	52	846						225		200	85			7				
B1220A	41		SHLD B1220	25N										TB27- 22	16N			107							
B1220L			TB27- 23CD	16N			107							P65-U*	25N										
B1220R			TB27- 23AB	16N			107							P65-U	25N										
B1221	46			400		370	48	52	846						225		200	85			7				
B1221A	41		SHLD B1221	25N										TB27- 28	16N			107							

1 THE STD CONDUCTOR TERMINATION FIGURES ARE PER
2 DIMENSIONS ARE IN INCHES AND TWO PLACE DECIMALS.

MANNED SPACECRAFT CENTER HOUSTON, TEXAS | SIZE A | 1900943
SCALE-NONE | REV LTR AR | SHEET 145 OF 188

MIL 2085 - 4-65 WIR

CONDUCTOR NUMBER	INDIVIDUAL LENGTH ITEM NO.	2	FROM CUT WIRE OR SHIELD STRIP WIRE OR JACKET CIRCUIT POINT	3	T I N	2	TERMINATION SPEC. 1 ITEM NO.						NO.	TO CUT WIRE OR SHIELD STRIP WIRE OR JACKET CIRCUIT POINT	3	T I N	2	TERMINATION SPEC. 1 ITEM NO.						NO.
B1221L			TB27- 26CD	16N			107							P65-R*	25N										
B1221R			TB27- 26AB	16N			107							P65-R	25N										
B1222	46			400		370	48	52	846						225		200	85			7				
B1222A	41		SHLD B1222	25N										TB27- 22	16N			107							
B1222L			TB27- 24CD	16N			107							P65-S*	25N										
B1222R			TB27- 24AB	16N			107							P65-S	25N										
B1223	65			225		200	86	87	856						52		23	90	91		7				
B1223A	41		SHLD B1223	25N										TB27- 25CD	16N			107							
B1223E			TB27- 25AB	16N			107							P93-H1	11N			89							
B1223X			SHLD B1223											P93-H2											
B1224	65			225		200	86	87	856						52		23	90	91		7				
B1224A	41		SHLD B1224	25N										TB27- 18CD	16N			107							
B1224E			TB27- 18AB	16N			107							P70-G1	11N			89							
B1224X			SHLD B1224											P70-G2											
B1225	46			225		200	85			7					400		370	48	52	846					
B1225B	41		TB27- 28	16N			107							SHLD B1225	25N										
B1225L			P65-T*	25N										TB27- 29CD	16N			107							
B1225R			P65-T	25N										TB27- 29AB	16N			107							

1 THE STD CONDUCTOR TERMINATION FIGURES ARE PER
2 DIMENSIONS ARE IN INCHES AND TWO PLACE DECIMALS.

MANNED SPACECRAFT CENTER HOUSTON, TEXAS | SIZE A | 1900943
SCALE-NONE | REV LTR AR | SHEET 146 OF 188

MIL 2085 - 4-65 WIR

CONDUCTOR NUMBER	INDIVIDUAL LENGTH ITEM NO.	2	FROM CUT WIRE OR SHIELD STRIP WIRE OR JACKET CIRCUIT POINT	3	T I N	2	TERMINATION SPEC. 1 ITEM NO.						NO.	TO CUT WIRE OR SHIELD STRIP WIRE OR JACKET CIRCUIT POINT	3	T I N	2	TERMINATION SPEC. 1 ITEM NO.						NO.
B1226	65			52		23	90	91		7					225		200	86	87	856					
B1226B	41		TB27- 27CD	16N			107							SHLD B1226	25N										
B1226E			P68-F1	11N			89							TB27- 27AB	16N			107							
B1226X			P68-F2											SHLD B1226											
B1227	41		P65-A	25N										TB23- 12	20N			111							
B1228	07			225		200	85			7					225		200	117	118	856					
B1228B	41		TB19- 39	16N			107							SHLD B1228	25N										
B1228W			TB10- 4	20N			111							TB19- 37AB	16N			107							
B1229	47			225		200	49	53	845						225		200	84			7				
B1229A	41		SHLD B1229	25N										E 27	25N										
B1229L			J17-HH	25N										P21-K*	25N										
B1229R			J17-GG	25N										P21-J*	25N										
B1230	47			225		200	84								225		200	49	53	84					
B1230B	41		E 27	25N										SHLD B1230	25N										
B1230L			P21-I*	25N										J17-KK	25N										
B1230R			P21-H*	25N										J17-JJ	25N										
B1232	45			225		200	84								225		200	50	54	84					
B1232B	41		E 26	25N										SHLD B1232	25N										

1 THE STD CONDUCTOR TERMINATION FIGURES ARE PER
2 DIMENSIONS ARE IN INCHES AND TWO PLACE DECIMALS.

MANNED SPACECRAFT CENTER HOUSTON, TEXAS | SIZE A | 1900943
SCALE-NONE | REV LTR AR | SHEET 147 OF 188

MIL 2085 - 4-65 WIR

CONDUCTOR INDIVIDUAL LENGTH NUMBER	ITEM NO.	2	FROM CUT WIRE OR SHIELD STRIP WIRE OR JACKET CIRCUIT POINT	2	TIN	2	TERMINATION SPEC. 1 ITEM NO.						NO.	TO CUT WIRE OR SHIELD STRIP WIRE OR JACKET CIRCUIT POINT	2	TIN	2	TERMINATION SPEC. 1 ITEM NO.						NO.
B1232L			P21-Z*	25	N									J24-L	25	N									
B1232R			P21-Y*	25	N									J24-K	25	N									
B1233	42		P17-BB	25	N									P34-S	25	N									
B1234	45			225		200	50	54	845						225		200	84			7				
B1234A	41		SHLD B1234	25	N									E 30	25	N									
B1234L			P21-FF	25	N									J25-Q*	25	N									
B1234R			P21-EE	25	N									J25-P*	25	N									
B1235	16		P33-C	25	N									TB24- 9	40	N		111							
B1236	42		TB20- 38AB	16	N		107							TB24- 3	20	N		111							
B1237	42		TB20- 38CD	16	N		107							TB24- 7	20	N		111							
B1238	178		TB23- 9	40	N		179							TB24- 7	40	N		179							
B1239	46			225		200	85			7					400		370	48	52	846					
B1239B	41		TB19- 21	16	N		107							SHLD B1239	25	N									
B1239L			P91-W*	25	N									TB19- 20CD	16	N		107							
B1239R			P91-W	25	N									TB19- 20AB	16	N		107							
B1240	46			225		200	85			7					400		370	48	52	846					
B1240B	41		TB19- 18	16	N		107							SHLD B1240	25	N									
B1240L			P91-V*	25	N									TB19- 19CD	16	N		107							

1 THE STD CONDUCTOR TERMINATION FIGURES ARE PER
2 DIMENSIONS ARE IN INCHES AND TWO PLACE DECIMALS.

MANNED SPACECRAFT CENTER HOUSTON, TEXAS | SIZE A | 1900943
SCALE - NONE | REV LTR AR | SHEET 148 OF 188

MIL 2089 - 4-63 WIR

CONDUCTOR INDIVIDUAL LENGTH NUMBER	ITEM NO.	2	FROM CUT WIRE OR SHIELD STRIP WIRE OR JACKET CIRCUIT POINT	2	TIN	2	TERMINATION SPEC. 1 ITEM NO.						NO.	TO CUT WIRE OR SHIELD STRIP WIRE OR JACKET CIRCUIT POINT	2	TIN	2	TERMINATION SPEC. 1 ITEM NO.						NO.
B1240R			P91-V	25	N									TB19- 19AB	16	N		107							
B1243	42		P25-Z	25	N									P34-V	25	N									
B1245	65			50		31				7					225		200	86	87	856					
B1245B	41		P82-BB	25	N									SHLD B1245	25	N									
B1245E			P58-H	11	Y									P82-AA	25	N									
B1245X			P58-L											SHLD B1245											
B1246	65			50		31				7					225		200	86	87	856					
B1246B	41		P82-Z*	25	N									SHLD B1246	25	N									
B1246E			P57-H	11	Y									P82-Y*	25	N									
B1246X			P57-L											SHLD B1246											
B1251	65			225		200	86	87	856						225		200	86	87	856					
B1251A	41		SHLD B1251	25	N									P14-H	25	N									
B1251B	41		TB27- 6A	16	N		107							SHLD B1251	25	N									
B1251E			P14-J	25	N									TB27- 5A	16	N		107							
B1252	41		P36-I*	25	N									TB21- 98CD	16	N		107							
B1255	42		P36-R	25	N									TB22- 40CD	16	N		107							
B1256	42		P34-H	25	N									TB21- 4AB	16	N		107							
B1257	16		P20-PP	25	N									TB23- 11	20	N		111							

1 THE STD CONDUCTOR TERMINATION FIGURES ARE PER
2 DIMENSIONS ARE IN INCHES AND TWO PLACE DECIMALS.

MANNED SPACECRAFT CENTER HOUSTON, TEXAS | SIZE A | 1900943
SCALE - NONE | REV LTR AR | SHEET 149 OF 188

MIL 2089 - 4-63 WIR

CONDUCTOR INDIVIDUAL LENGTH NUMBER	ITEM NO.	2	FROM CUT WIRE OR SHIELD STRIP WIRE OR JACKET CIRCUIT POINT	2	TIN	2	TERMINATION SPEC. 1 ITEM NO.						NO.	TO CUT WIRE OR SHIELD STRIP WIRE OR JACKET CIRCUIT POINT	2	TIN	2	TERMINATION SPEC. 1 ITEM NO.						NO.
B1258	16		TB21- 63AB	16	N		108							P32-r*	25	N									
B1259	46			225		200	85			7					400		370	48	52	846					
B1259B	41		TB27- 10	16	N		107							SHLD B1259	25	N									
B1259L			P25-X*	25	N									TB27- 12D	16	N		107							
B1259R			P25-W*	25	N									TB27- 11D	16	N		107							
B1260	46			225		200	85			7					400		370	48	52	846					
B1260B	41		TB27- 13	16	N		107							SHLD B1260	25	N									
B1260L			P25-BB	25	N									TB27- 14A	16	N		107							
B1260R			P25-AA	25	N									TB27- 15A	16	N		107							
B1261	46			225		200	85			7					400		370	48	52	846					
B1261B	41		TB27- 10	16	N		107							SHLD B1261	25	N									
B1261L			P26-A*	25	N									TB27- 9C	16	N		107							
B1261R			P26-Z	25	N									TB27- 8C	16	N		107							
B1262	46			225		200	85			7					400		370	48	52	846					
B1262B	41		TB27- 4	16	N		107							SHLD B1262	25	N									
B1262L			P26-R*	25	N									TB27- 5D	16	N		107							
B1262R			P26-Q*	25	N									TB27- 3D	16	N		107							
B1263			DELETED																						

1 THE STD CONDUCTOR TERMINATION FIGURES ARE PER
2 DIMENSIONS ARE IN INCHES AND TWO PLACE DECIMALS.

MANNED SPACECRAFT CENTER HOUSTON, TEXAS | SIZE A | 1900943
SCALE - NONE | REV LTR AR | SHEET 150 OF 188

MIL 2089 - 4-63 WIR

CONDUCTOR INDIVIDUAL LENGTH NUMBER	ITEM NO.	2	FROM CUT WIRE OR SHIELD STRIP WIRE OR JACKET CIRCUIT POINT	2	TIN	2	TERMINATION SPEC. 1 ITEM NO.						NO.	TO CUT WIRE OR SHIELD STRIP WIRE OR JACKET CIRCUIT POINT	2	TIN	2	TERMINATION SPEC. 1 ITEM NO.						NO.
B1263B			DELETED																						
B1263L			DELETED																						
B1263R			DELETED																						
B1264	46			225		200	85			7					400		370	48	52	846					
B1264B	41		TB27- 10	16	N		107							SHLD B1264	25	N									
B1264L			P26-MM	25	N									TB27- 9B	16	N		107							
B1264R			P26-LL	25	N									TB27- 8B	16	N		107							
B1265	46			225		200	85			7					400		370	48	52	846					
B1265B	41		TB19- 21	16	N		107							SHLD B1265	25	N									
B1265L			P 1-D	25	N									TB19- 20CD	16	N		107							
B1265R			P 1-B	25	N									TB19- 20AB	16	N		107							
B1266	07			225		200	85			7					225		200	117	118	856					
B1266B	41		TB20- 9	16	N		107							SHLD B1266	25	N									
B1266W			TB 5- 2	20	N		111							TB20- 10AB	16	N		107							
B1267	65			225		200	86	87	856						225		200	86	87	856					
B1267A	41		SHLD B1267	25	N									P14-V	25	N									
B1267B	41		TB17- 24CD	16	N		107							SHLD B1267	25	N									
B1267E			P14-U	25	N									TB17- 24AB	16	N		107							

1 THE STD CONDUCTOR TERMINATION FIGURES ARE PER
2 DIMENSIONS ARE IN INCHES AND TWO PLACE DECIMALS.

MANNED SPACECRAFT CENTER HOUSTON, TEXAS | SIZE A | 1900943
SCALE - NONE | REV LTR AR | SHEET 151 OF 188

MIL 2089 - 4-63 WIR

CONDUCTOR INDIVIDUAL LENGTH NUMBER	ITEM NO.	2	FROM CUT WIRE OR SHIELD STRIP WIRE OR JACKET CIRCUIT POINT	2	TIN	2	TERMINATION SPEC. 1 ITEM NO.	NO.	TO CUT WIRE OR SHIELD STRIP WIRE OR JACKET CIRCUIT POINT	2	TIN	2	TERMINATION SPEC 1 ITEM NO.	NO.
B1268	65			225		200	86 87 856			225		200	86 87 856	
B1268A	41		SHLD B1268	25N					P14-A*	25N				
B1268B	41		TB17- 4CD	16N			107		SHLD B1268	25N				
B1268E			P14-B*	25N					TB17- 4AB	16N			107	
B1269	40		P23-A	25N					TB25- 16	20N			111	
B1270	42		J24-AA	25N					P37-R*	25N				
B1271	42		J24-Z*	25N					P37-K*	25N				
B1272	65			225		200	86 87 856			225		200	86 87 856	
B1272A	41		SHLD B1272	25N					P14-N	25N				
B1272B	41		TB17- 5CD	16N			107		SHLD B1272	25N				
B1272E			P14-M	25N					TB17- 5AB	16N			107	
B1273	65			225		200	86 87 856			225		200	86 87 856	
B1273A	41		SHLD B1273	25N					P14-H*	25N				
B1273B	41		TB17- 7CD	16N			107		SHLD B1273	25N				
B1273E			P14-I*	25N					TB17- 7AB	16N			107	
B1274	65			225		200	86 87 856			225		200	86 87 856	
B1274A	41		SHLD B1274	25N					P15-Y	25N				
B1274B	41		TB17- 3CD	16N			107		SHLD B1274	25N				

1 THE STD CONDUCTOR TERMINATION FIGURES ARE PER
2 DIMENSIONS ARE IN INCHES AND TWO PLACE DECIMALS.

MANNED SPACECRAFT CENTER HOUSTON, TEXAS | SIZE A | 1900943
SCALE-NONE | REV LTR AR | SHEET 152 OF 188

MIL 2069 - 4-65 WIR

CONDUCTOR INDIVIDUAL LENGTH NUMBER	ITEM NO.	2	FROM CUT WIRE OR SHIELD STRIP WIRE OR JACKET CIRCUIT POINT	2	TIN	2	TERMINATION SPEC. 1 ITEM NO.	NO.	TO CUT WIRE OR SHIELD STRIP WIRE OR JACKET CIRCUIT POINT	2	TIN	2	TERMINATION SPEC 1 ITEM NO.	NO.
B1274E			P15-Z	25N					TB17- 3AB	16N			107	
B1275	42		P25-E*	25N					J16-CC	25N				
B1276	42		P25-F*	25N					J16-BB	25N				
B1277	42		P25-G*	25N					J16-FF	25N				
B1278	42		P25-H*	25N					J16-EE	25N				
B1279	42		P25-I*	25N					J16-X*	25N				
B1280	42		P25-J*	25N					J16-Y*	25N				
B1283	42		J18-HH	25N					P96-T	25N				
B1284	42		J21-V*	25N					TB21- 5CD	16N			107	
B1285	46			225		200	85	7		400		370	48 52 846	
B1285B	41		TB19- 97	16N			107		SHLD B1285	25N				
B1285L			P26-I*	25N					TB19- 98CD	16N			107	
B1285R			P26-H*	25N					TB19- 98AB	16N			107	
B1286	42		J18-J*	25N					P92-Z	25N				
B1287	46			225		200	85	7		400		370	48 52 846	
B1287B	41		TB19- 15	16N			107		SHLD B1287	25N				
B1287L			J17-FF	25N					TB19- 16CD	16N			107	
B1287R			J17-EE	25N					TB19- 16AB	16N			107	

1 THE STD CONDUCTOR TERMINATION FIGURES ARE PER
2 DIMENSIONS ARE IN INCHES AND TWO PLACE DECIMALS.

MANNED SPACECRAFT CENTER HOUSTON, TEXAS | SIZE A | 1900943
SCALE-NONE | REV LTR AR | SHEET 153 OF 188

MIL 2069 - 4-65 WIR

CONDUCTOR INDIVIDUAL LENGTH NUMBER	ITEM NO.	2	FROM CUT WIRE OR SHIELD STRIP WIRE OR JACKET CIRCUIT POINT	2	TIN	2	TERMINATION SPEC. 1 ITEM NO.	NO.	TO CUT WIRE OR SHIELD STRIP WIRE OR JACKET CIRCUIT POINT	2	TIN	2	TERMINATION SPEC 1 ITEM NO.	NO.
B1289	42		J22-E*	25N					TB18- 97CD	16N			107	
B1290	41		J25-EE	25N					P92-K	25N				
B1291	41		J25-X*	25N					P92-E	25N				
B1292	42		P25-T*	25N					TB19- 40CD	16N			107	
B1293	41		TB22- 95AB	16N			107		P99-Z	25N				
B1294	42		J18-DD	25N					P99-H	25N				
B1295	42		J18-EE	25N					P99-G	25N				
B1297	42		J21-T	25N					P99-GG	25N				
B1298	42		J21-CC	25N					P98-PP	25N				
B1302	46			225		200	85	7		400		370	48 52 846	
B1302B	41		TB19- 18	16N			107		SHLD B1302	25N				
B1302L			P 3-D	25N					TB19- 19CD	16N			107	
B1302R			P 3-B	25N					TB19- 19AB	16N			107	
B1304	46			225		200	48 52 845			225		200	85	7
B1304A	41		SHLD B1304	25N					E 36	25N				
B1304L			P32-A*	25N					J17-H*	25N				
B1304R			P32-A	25N					J17-G*	25N				
B1305	42		J26-V*	25N					P34-G*	25N				

1 THE STD CONDUCTOR TERMINATION FIGURES ARE PER
2 DIMENSIONS ARE IN INCHES AND TWO PLACE DECIMALS.

MANNED SPACECRAFT CENTER HOUSTON TEXAS | SIZE A | 1900943
SCALE-NONE | REV LTR AR | SHEET 154 OF 188

MIL 2069 - 4-65 WIR

CONDUCTOR INDIVIDUAL LENGTH NUMBER	ITEM NO.	2	FROM CUT WIRE OR SHIELD STRIP WIRE OR JACKET CIRCUIT POINT	2	TIN	2	TERMINATION SPEC. 1 ITEM NO.	NO.	TO CUT WIRE OR SHIELD STRIP WIRE OR JACKET CIRCUIT POINT	2	TIN	2	TERMINATION SPEC 1 ITEM NO.	NO.
B1307	42		J26-FF	25N					P99-U	25N				
B1308	42		P25-S*	25N					TB22- 2AB	16N			107	
B1309			DELETED											
B1309B			DELETED											
B1309L			DELETED											
B1309R			DELETED											
B1310			DELETED											
B1310B			DELETED											
B1310L			DELETED											
B1310R			DELETED											
B1311	46			225			85	7A		400			48 52 84 6	
B1311B	41	80C	TB22- 36	17N		107			SHLD B1311	25N				
B1311L			P96-D*	25N					TB22- 35CD	17N			107	
B1311R			P96-E*	25N					TB22- 35AB	17N			107	
B1312	99			225			84	7A		400		102	104 83 6	
B1312B	41	80C	TB20- 15	17N		108			SHLD B1312	25N				
B1312L			P21-P*	25N					TB20- 16CD	17N			108	
B1312R			P21-N*	25N					TB20- 16AB	17N			108	

1 THE STD CONDUCTOR TERMINATION FIGURES ARE PER
2 DIMENSIONS ARE IN INCHES AND TWO PLACE DECIMALS.

MANNED SPACECRAFT CENTER HOUSTON, TEXAS | SIZE A | 1900943
SCALE-NONE | REV LTR AR | SHEET 155 OF 188

MIL 2069 - 4-65 WIR

CONDUCTOR INDIVIDUAL LENGTH NUMBER	ITEM NO.	2	FROM CUT WIRE OR SHIELD STRIP WIRE OR JACKET CIRCUIT POINT	2	T I N	2	TERMINATION SPEC. 1	ITEM NO.	NO.	TO CUT WIRE OR SHIELD STRIP WIRE OR JACKET CIRCUIT POINT	2	T I N	2	TERMINATION SPEC 1	ITEM NO.	NO.
B1312Y			P21-Q*	25N						TB19- 22AB	17N		108			
B1313	46			225		85		7A			400		48 52 84 6			
B1313B	41	800	TB19- 33	17N		107				SHLD B1313	25N					
B1313L			P20-Z	25N						TB19- 34	17N		107			
B1313R			P20-Y	25N						TB19- 35	17N		107			
B1314	99			225		84		7A			400		102104 83 6			
B1314B	41	800	TB20- 15	17N		108				SHLD B1314	25N					
B1314L			P33-J	25N						TB20- 16CD	17N		108			
B1314R			P33-H	25N						TB20- 16AB	17N		108			
B1314Y			P33-G	25N						TB19- 22AB	17N		108			
B1315	46			225		85		7A			400		48 52 84 6			
B1315B	41	800	TB20- 91	17N		107				SHLD B1315	25N					
B1315L			P26-K*	25N						TB20- 92CD	17N		107			
B1315R			P26-J*	25N						TB20- 92AB	17N		107			
B1316	46			225		85		7A			400		48 52 84 6			
B1316B	41	800	TB20- 94	17		107				SHLD B1316	25N					
B1316L			P26-P	25N						TB20- 93CD	17N		107			
B1316R			P26-N	25N						TB20- 93AB	17N		107			

1 THE STD CONDUCTOR TERMINATION FIGURES ARE PER
2 DIMENSIONS ARE IN INCHES AND TWO PLACE DECIMALS.

MANNED SPACECRAFT CENTER HOUSTON, TEXAS | SIZE A | 1900943
SCALE - NONE | REV LTR AR | SHEET 156 OF 188

MIL 2265 - 4-65 MIR

CONDUCTOR INDIVIDUAL LENGTH NUMBER	ITEM NO.	2	FROM CUT WIRE OR SHIELD STRIP WIRE OR JACKET CIRCUIT POINT	2	T I N	2	TERMINATION SPEC. 1	ITEM NO.	NO.	TO CUT WIRE OR SHIELD STRIP WIRE OR JACKET CIRCUIT POINT	2	T I N	2	TERMINATION SPEC 1	ITEM NO.	NO.
B1317	46			225		85		7A			400		48 52 84 6			
B1317B	41	800	TB19- 33	17		107				SHLD B1317	25N					
B1317L			P33-L	25N						TB19- 32CD	17N		107			
B1317R			P33-K	25N						TB19- 32AB	17N		107			
B1318	46			400		85		7A			400		48 52 84 6			
B1318B	41	800	TB19- 33	17N		107				SHLD B1318	25N					
B1318L			TB18- 8CD	17N		107				TB19- 32CD	17N		107			
B1318R			TB18- 8AB	17N		107				TB19- 32AB	17N		107			
B1319	46			400		85		7A			400		48 52 84 6			
B1319B	41	800	TB19- 30	17N		107				SHLD B1319	25N					
B1319L			TB19- 6CD	17N		107				TB19- 31CD	17N		107			
B1319R			TB19- 6AB	17N		107				TB19- 31AB	17N		107			
B1320	42		TB19- 22CD	17N		107				TB20- 16CD	17N		107			
B1321	42		TB20- 11AB	17N		107				TB18- 43	17N		107			
B1322	42		TB18- 48	17N		107				TB19- 48	17N		107			
B1323	42		TB19- 41	17N		107				TB20- 44	17N		107			
B1324	42		TB20- 47	17N		107				TB21- 48	17N		107			
B1325	42		TB20- 47	17N		107				TB22- 48	17N		107			

1 THE STD CONDUCTOR TERMINATION FIGURES ARE PER
2 DIMENSIONS ARE IN INCHES AND TWO PLACE DECIMALS.

MANNED SPACECRAFT CENTER HOUSTON, TEXAS | SIZE A | 1900943
SCALE - NONE | REV LTR AR | SHEET 157 OF 188

MIL 2265 - 4-65 MIR

CONDUCTOR INDIVIDUAL LENGTH NUMBER	ITEM NO.	2	FROM CUT WIRE OR SHIELD STRIP WIRE OR JACKET CIRCUIT POINT	2	T I N	2	TERMINATION SPEC. 1	ITEM NO.	NO.	TO CUT WIRE OR SH ELD STRIP WIRE OR JACKET CIRCUIT POINT	2	T I N	2	TERMINATION SPEC 1	ITEM NO.	NO.
B1326	42		TB20- 44	17N		107				TB21- 44CD	17N		107			
B1327	42		P 5-U*	25N						P39-Q*	25N					
B1328	42		J22-F*	25N						TB18-100AB	17N		107			
B1329	42		J22-G*	25N						TB18-100CD	17N		107			
B1330	42		J22-H*	25N						TB20- 7AB	17N		107			
B1331	42		J22-J*	25N						TB21- 40CD	17N		107			
B1332	42		P36-JJ	25N						TB21- 40CD	17N		107			
B1333	41		P45-D	25N						P45-E	25N					
B1334	41		P45-G	25N						P45-F	25N					
B1335	41		P43-D	25N						P43-E	25N					
B1336	41		P43-G	25N						P43-F	25N					
B1337	42		TB24- 7	20N		111				TB20- 37CD	17N		107			
B1338	46			225		85		7A			400		48 52 84 6			
B1338B	41	800	TB19- 36	17N		107				SHLD B1338	25N					
B1338L			U17-DD	25N						TB19- 34	17N		107			
B1338R			U17-CC	25N						TB19- 35	17N		107			
B1339	16		P20-CC	25N						TB19- 40AB	17N		108			
B1340	16		P34-P	25N						TB19- 40AB	17N		108			

1 THE STD CONDUCTOR TERMINATION FIGURES ARE PER
2 DIMENSIONS ARE IN INCHES AND TWO PLACE DECIMALS.

MANNED SPACECRAFT CENTER HOUSTON, TEXAS | SIZE A | 1900943
SCALE - NONE | REV LTR AR | SHEET 158 OF 188

MIL 2265 - 4-65 MIR

CONDUCTOR INDIVIDUAL LENGTH NUMBER	ITEM NO.	2	FROM CUT WIRE OR SHIELD STRIP WIRE OR JACKET CIRCUIT POINT	2	T I N	2	TERMINATION SPEC. 1	ITEM NO.	NO.	TO CUT WIRE OR SHIELD STRIP WIRE OR JACKET CIRCUIT POINT	2	T I N	2	TERMINATION SPEC 1	ITEM NO.	NO.
B1341	16		P25-S	25N						TB19- 40AB	17N		108			
B1344	41		P82-M*	25N						J 3-EE	25N					
B1345	41		P82-N*	25N						J 3-W*	25N					
B1346	41		P82-P*	25N						J 3-FF	25N					
B1347	41		P82-R*	25N						J 3-GG	25N					
B1348			DELETE													
B1348B			DELETE													
B1348L			DELETE													
B1348R			DELETE													
B1349	46			225		85		7A			400		48 52 84 6			
B1349B	41	800	TB19- 30	17N		107				SHLD B1349	25N					
B1349L			P35-V	25N						TB19- 31CD	17N		107			
B1349R			P35-U	25N						TB19- 31AB	17N		107			
B1350	42		P35-Z*	25N						J25-V*	25N					
B1351	45			225		84		7A			300		50 54 84 6			
B1351B	41		E 50	25N						SHLD B1351	25N					
B1351L			P17-V	25N						TB 2- 3	20N		111			
B1351R			P17-U	25N						TB 2- 5	20N		111			

1 THE STD CONDUCTOR TERMINATION FIGURES ARE PER
2 DIMENSIONS ARE IN INCHES AND TWO PLACE DECIMALS.

MANNED SPACECRAFT CENTER HOUSTON, TEXAS | SIZE A | 1900943
SCALE - NONE | REV LTR AR | SHEET 159 OF 188

MIL 2265 - 4-65 MIR

CONDUCTOR INDIVIDUAL LENGTH NUMBER	ITEM NO.	2	FROM CUT WIRE OR SHIELD STRIP WIRE OR JACKET CIRCUIT POINT	2	T I N	2	TERMINATION SPEC. 1	ITEM NO.	NO.	TO CUT WIRE OR SHIELD STRIP WIRE OR JACKET CIRCUIT POINT	2	T I N	2	TERMINATION SPEC. 1	ITEM NO.	NO.
B1352	41		U17-LL	25N						TB20- 4AB	16N		107			
B1353	65			23		91	90				225		86	87	85	6
B1353B	41	800	TB25- 11	20N		111				SHLD B1353	25N					
B1353E			P62-A1	12N		89				TB25- 11	20N		111			
B1353X			P62-A2							SHLD B1353						
B1354	46			225		85		7A			400		48	52	84	6
B1354B	41	800	TB27- 1	17N		107				SHLD B1354	25N					
B1354L			P37-X	25N						TB27- 2B	17N		107			
B1354R			P37-Y	25N						TB27- 2A	17N		107			
→ B1355	7			225		120		7A			225		117	118	85	6
B1355B	41	800	TB27- 1	17N		107				SHLD B1355	25N					
B1355W			P37-U	25N						TB27- 2D	17N		107			
B1356	7			225		120		7A			225		117	118	85	6
B1356B	41	800	TB27- 1	17N		107				SHLD B1356	25N					
B1356W			P37-V	25N						TB27- 2C	17N		107			
B1357	7			225		120		7A			225		117	118	85	6
B1357B	41	800	TB27- 4	17N		107				SHLD B1357	25N					
B1357W			P37-S	25N						TB27- 3B	17N		107			

1 THE STD CONDUCTOR TERMINATION FIGURES ARE PER
2 DIMENSIONS ARE IN INCHES AND TWO PLACE DECIMALS.

MANNED SPACECRAFT CENTER HOUSTON, TEXAS | SIZE A | 1900943
SCALE - NONE | REV LTR AR | SHEET 160 OF 188

MIL-2049 4-63 WIR

CONDUCTOR INDIVIDUAL LENGTH NUMBER	ITEM NO.	2	FROM CUT WIRE OR SHIELD STRIP WIRE OR JACKET CIRCUIT POINT	2	T I N	2	TERMINATION SPEC. 1	ITEM NO.	NO.	TO CUT WIRE OR SHIELD STRIP WIRE OR JACKET CIRCUIT POINT	2	T I N	2	TERMINATION SPEC. 1	ITEM NO.	NO.
B1358	7			225		120		7A			225		117	118	85	6
B1358B	41	800	TB27- 4	17N		107				SHLD B1358	25N					
B1358W			P37-T	25N						TB27- 3A	17N		107			
B1359	41		TB19- 50CD	17N		107				TB27- 2B	17N		107			
B1360	16		P90-H	25N						TB25- 7	20N		111			
B1361			DELETE													
B1362	46			225		85		7A			400		48	52	84	6
B1362B	41	800	TB19- 78	17N		107				SHLD B1362	25N					
B1362L			J25-U*	25N						TB19- 77CD	17N		107			
→ B1362R			J25-T*	25N						TB19- 77AB	17N		107			
B1363	42		J18-CC	25N						TB22- 95AB	17N		107			
B1364	41		J16-F*	25N						TB22- 96	17N		107			
B1365	41		P35-Y*	25N						TB22- 96	17N		107			
B1366	42		P92-G	25N						J25-FF	25N					
B1367	42		P92-H	25N						J25-BB	25N					
B1368	42		P92-J	25N						J25-AA	25N					
B1369	42		P34-D	25N						P20-A*	25N					
B1370	42		P37-FF	25N						TB19- 2AB	17N		107			

1 THE STD CONDUCTOR TERMINATION FIGURES ARE PER
2 DIMENSIONS ARE IN INCHES AND TWO PLACE DECIMALS.

MANNED SPACECRAFT CENTER HOUSTON, TEXAS | SIZE A | 1900943
SCALE - NONE | REV LTR AR | SHEET 161 OF 188

MIL-2049 4-63 WIR

CONDUCTOR INDIVIDUAL LENGTH NUMBER	ITEM NO.	2	FROM CUT WIRE OR SHIELD STRIP WIRE OR JACKET CIRCUIT POINT	2	T I N	2	TERMINATION SPEC. 1	ITEM NO.	NO.	TO CUT WIRE OR SHIELD STRIP WIRE OR JACKET CIRCUIT POINT	2	T I N	2	TERMINATION SPEC. 1	ITEM NO.	NO.
B1371	41		P24-E*	25N						TB 8- 5	20N		111			
B1372	41		P34-Y	25N						TB 8- 4	20N		111			
B1373	41		P38-C	25N						TB20- 11CD	17N		107			
B1376	46			225		85		7A			400		48	52	84	6
B1376B	41	800	TB18- 39	17N		107				SHLD B1376	25N					
B1376L			P26-HH	25N						TB18- 40CD	17N		107			
B1376R			P26-GG	25N						TB18- 40AB	17N		107			
B1377	42		P20-HH	25N						TB22- 40CD	17N		107			
B1378	42		TB21- 40AB	17N		107				TB21- 5AB	17N		107			
→ B1379	42		P96-M*	25N						TB21- 5AB	17N		107			
B1380	42		P96-P*	25N						P24-T	17N					
B1381	42		P24-U	25N						TB21- 5AB	17N		107			
B1382	40		J26-X	20N						TB25- 12	20N		111			
B1383	40		J26-Y	20N						TB25- 12	20N		111			
B1384	40		J26-Z	20N						TB25- 13	20N		111			
B1385	40		TB13- 2	20N		111				TB25- 13	20N		111			
B1386	42		J23-EE	25N						TB19- 89AB	17N		107			
B1387	42		J23-FF	25N						TB19- 89CD	17N		107			

1 THE STD CONDUCTOR TERMINATION FIGURES ARE PER
2 DIMENSIONS ARE IN INCHES AND TWO PLACE DECIMALS.

MANNED SPACECRAFT CENTER HOUSTON, TEXAS | SIZE A | 1900943
SCALE NONE | REV LTR AR | SHEET 162 OF 188

MIL-2049 4-63 WIR

CONDUCTOR INDIVIDUAL LENGTH NUMBER	ITEM NO.	2	FROM CUT WIRE OR SHIELD STRIP WIRE OR JACKET CIRCUIT POINT	2	T I N	2	TERMINATION SPEC. 1	ITEM NO.	NO.	TO CUT WIRE OR SHIELD STRIP WIRE OR JACKET CIRCUIT POINT	2	T I N	2	TERMINATION SPEC. 1	ITEM NO.	NO.
B1388	42		J23-GG	25N						TB19- 90AB	17N		107			
B1389	42		J23-HH	25N						TB19- 90CD	17N		107			
B1390	42		J23-U*	25N						TB19- 92AB	17N		107			
B1391	42		J23-V*	25N						TB19- 92CD	17N		107			
B1392	42		J23-W*	25N						TB19- 93AB	17N		107			
B1393	42		J23-X*	25N						TB19- 93CD	17N		107			
B1394	42		J23-AA	25N						TB19- 95AB	17N		107			
B1395	42		J23-BB	25N						TB19- 95CD	17N		107			
B1396	42		J23-CC	25N						TB19- 96AB	17N		107			
→ B1397	42		J23-DD	25N						TB19- 96CD	17N		107			
B1398	65			23		91	90				225		86	87	85	6
B1398B			DELETE													
B1398E	65		P52-H	12N		89				P65-J*	12N					
B1398X			P52-L							SHLD B1398						
B1399	42		P99-JJ	25N						J16-LL	25N					
B1400	42		P99-MM	25N						J16-MM	25N					
B1401	42		P99-LL	25N						J16-PP	25N					
B1402	42		P99-KK	25N						J16-NN	25N					

1 THE STD CONDUCTOR TERMINATION FIGURES ARE PER
2 DIMENSIONS ARE IN INCHES AND TWO PLACE DECIMALS.

MANNED SPACECRAFT CENTER HOUSTON, TEXAS | SIZE A | 1900943
SCALE - NONE | REV LTR AR | SHEET 163 OF 188

MIL-2049 4-63 WIR

CONDUCTOR INDIVIDUAL LENGTH NUMBER	ITEM NO.	2	FROM CUT WIRE OR SHIELD STRIP WIRE OR JACKET CIRCUIT POINT	3	T I N	2	TERMINATION SPEC. 1 ITEM NO.	NO.	TO CUT WIRE OR SHIELD STRIP WIRE OR JACKET CIRCUIT POINT	3	T I N	2	TERMINATION SPEC 1 ITEM NO.	NO.
B1403	41		J25-B	25N					TB23- 4	20N			111	
B1404	41		J17-B	25N					TB23- 1	20N			111	
B1405	41		J24-B	25N					TB23- 4	20N			111	
B1406	41		J16-B	25N					TB23- 1	20N			111	
B1408	41		J26-K*	25N					TB21- 4AB	17N			107	
B1409	41		J16-KK	25N					TB 9- 6	20N			111	
B1410	16		J 4-T*	25N					TB23- 16	20N			111	
B1411	46			225	200	85	7			400	370	48 52 84 6		
B1411B	41		TB17-100	16N		107			SHLD B1411	25N				
B1411L			P85-LL	25N					TB17- 99CD	16N			107	
B1411R			P85-KK	25N					TB17- 99AB	16N			107	
B1412	46			225	200	85	7			400	370	48 52 84 6		
B1412B	41		TB19- 33	16N		107			SHLD B1412	25N				
B1412L			P35-R	25N					TB19- 32CD	16N			107	
B1412R			P35-P	25N					TB19- 32AB	16N			107	
B1413	46			225	200	85	7			400	370	48 52 84 6		
B1413B	41		TB18- 36	16N		107			SHLD B1413	25N				
B1413L			P32-MM	25N					TB18- 35CD	16N			107	

1> THE STD CONDUCTOR TERMINATION FIGURES ARE PER
2> DIMENSIONS ARE IN INCHES AND TWO PLACE DECIMALS.

MANNED SPACECRAFT CENTER HOUSTON, TEXAS | SIZE A | 1900943
SCALE - NONE | REV LTR AR | SHEET 164 OF 188

MIL-2989 4-65 WIR

CONDUCTOR INDIVIDUAL LENGTH NUMBER	ITEM NO.	2	FROM CUT WIRE OR SHIELD STRIP WIRE OR JACKET CIRCUIT POINT	3	T I N	2	TERMINATION SPEC. 1 ITEM NO.	NO.	TO CUT WIRE OR SHIELD STRIP WIRE OR JACKET CIRCUIT POINT	3	T I N	2	TERMINATION SPEC 1 ITEM NO.	NO.
B1413R			P32-PP	25N					TB18- 35AB	16N			107	
B1414	46			225	200	85	7			400	370	48 52 84 6		
B1414B	41		TB18- 30	16N		107			SHLD B1414	25N				
B1414L			P32-FF	25N					TB18- 31CD	16N			107	
B1414R			P32-NN	25N					TB18- 31AB	16N			107	
B1415	46			225	200	85	7			400	370	48 52 84 6		
B1415B	41		TB18- 33	16N		107			SHLD B1415	25N				
B1415L			P32-Z	25N					TB18- 32CD	16N			107	
B1415R			P32-Y	25N					TB18- 32AB	16N			107	
B1416	42		P33-M	25N					P34-Z*	25N				
B1417	42		P33-N	25N					P34-AA	25N				
B1418	42		P33-P	25N					P34-BB	25N				
B1419	42		P33-R	25N					J22-K	25N				
B1420	42		J22-R	25N					TB21- 63CD	16N			107	
B1421	42		J22-P	25N					TB21- 60CD	16N			107	
B1422	42		J22-N	25N					TB21- 56	16N			107	
B1425	41		J 3-D*	25N					TB23- 15	20N			111	
B1426	41		J4-U	25N					TB23- 16	20N			111	

1> THE STD CONDUCTOR TERMINATION FIGURES ARE PER
2> DIMENSIONS ARE IN INCHES AND TWO PLACE DECIMALS.

MANNED SPACECRAFT CENTER HOUSTON, TEXAS | SIZE A | 1900943
SCALE - NONE | REV LTR AR | SHEET 165 OF 188

MIL-2989 4-65 WIR

CONDUCTOR INDIVIDUAL LENGTH NUMBER	ITEM NO.	2	FROM CUT WIRE OR SHIELD STRIP WIRE OR JACKET CIRCUIT POINT	3	T I N	2	TERMINATION SPEC. 1 ITEM NO.	NO.	TO CUT WIRE OR SHIELD STRIP WIRE OR JACKET CIRCUIT POINT	3	T I N	2	TERMINATION SPEC 1 ITEM NO.	NO.
B1427	41		J18-B	25N					TB23- 2	20N			111	
B1428	41		J19-J*	25N					TB23- 2	20N			111	
B1429	41		J20-H	25N					TB23- 3	20N			111	
B1430	41		J21-B	25N					TB23- 3	20N			111	
B1431	41		J26-B	25N					TB23- 5	20N			111	
B1432	42		P98-F	25N					TB17- 89AB	16N			107	
B1433	41		TB12- 10	20N		111			TB17- 89CD	16N			107	
B1434			DELETED											
B1435			DELETED											
B1436			DELETED											
B1437			DELETED											
B1438			DELETED											
B1439			DELETED											
B1440			DELETED											
B1441			DELETED											
B1442	16		E 25	25N					E 27	25N				
B1443	16		E 26	25N					E 27	25N				
B1444	16		TB23- 25	20N		111			E 27	25N				

1> THE STD CONDUCTOR TERMINATION FIGURES ARE PER
2> DIMENSIONS ARE IN INCHES AND TWO PLACE DECIMALS.

MANNED SPACECRAFT CENTER HOUSTON, TEXAS | SIZE A | 1900943
SCALE - NONE | REV LTR AR | SHEET 166 OF 188

MIL-2989 4-65 WIR

CONDUCTOR INDIVIDUAL LENGTH NUMBER	ITEM NO.	2	FROM CUT WIRE OR SHIELD STRIP WIRE OR JACKET CIRCUIT POINT	3	T I N	2	TERMINATION SPEC. 1 ITEM NO.	NO.	TO CUT WIRE OR SHIELD STRIP WIRE OR JACKET CIRCUIT POINT	3	T I N	2	TERMINATION SPEC 1 ITEM NO.	NO.
B1445	16		E 28	25N					E 31	25N				
B1446	16		E 29	25N					E 31	25N				
B1447	16		E 30	25N					E 31	25N				
B1448	16		TB23- 25	20N		111			E 31	25N				
B1449	16		TB23- 23	20N		111			E 32	25N				
B1450	16		TB23- 22	20N		111			E 33	25N				
B1451	16		E 34	25N					E 37	25N				
B1452	16		E 35	25N					E 37	25N				
B1453	16		E 36	25N					E 37	25N				
B1454	16		TB23- 24	20N		111			E 37	25N				
B1455	16		TB23- 23	20N		111			E 38	25N				
B1456	16		TB 4- 6	20N		111			E 39	25N				
B1457	16		E 40	25N					E 42	25N				
B1458	16		E 41	25N					E 42	25N				
B1459	16		TB23- 19	20N		111			E 42	25N				
B1460	16		E 43	25N					E 54	25N				
B1461	16		TB 9- 10	20N		111			E 44	25N				
B1462	16		E 45	25N					TB 6- 7	20N			111	

1> THE STD CONDUCTOR TERMINATION FIGURES ARE PER
2> DIMENSIONS ARE IN INCHES AND TWO PLACE DECIMALS.

MANNED SPACECRAFT CENTER HOUSTON, TEXAS | SIZE A | 1900943
SCALE - NONE | REV LTR AR | SHEET 167 OF 188

MIL-2989 4-65 WIR

CONDUCTOR INDIVIDUAL LENGTH NUMBER	ITEM NO.	2	FROM CUT WIRE OR SHIELD STRIP WIRE OR JACKET CIRCUIT POINT 3	T I N 2	TERMINATION SPEC. 1 ITEM NO.	NO.	TO CUT WIRE OR SHIELD STRIP WIRE OR JACKET CIRCUIT POINT 3	T I N 2	TERMINATION SPEC. 1 ITEM NO.	NO.
B1463	16		TB11- 6	20N	111		E 46	25N		
B1464	16		E 47	25N			E 58	25N		
B1465	16		E 48	25N			E 31	25N		
B1466	42		J22-M	25N			TB20- 5AB	16N	107	
B1467	41		J18-C	25N			TB 1- 6	25N	111	
B1468	46			225	200 85	7		400	370 48 52 84 6	
B1468B	41		TB20- 69	16N	107		SHLD B1468			
B1468L			P99-X*	25N			TB20- 70	16N	107	
B1468R			P99-Y*	25N			TB20- 71	16N	107	
B1469	46			225	200 85	7		225	200 48 52 84 5	
B1469B	41		E 30	25N			SHLD B1469			
B1469L			P99-A	25N			P21-V	25N		
B1469R			P99-B	25N			P21-W	25N		
B1470	16		E 49	25N			E 51	25N		
B1471	16		TB 2- 7	20N	111		E 51	25N		
B1472	16		E 50	25N			E 51	25N		
B1473	16		E 52	25N			E 54	25N		
B1474	16		TB 4- 5	20N	111		E 54	25N		

1> THE STD CONDUCTOR TERMINATION FIGURES ARE PER
2> DIMENSIONS ARE IN INCHES AND TWO PLACE DECIMALS.

MANNED SPACECRAFT CENTER HOUSTON, TEXAS | SIZE A | 1900943
SCALE - NONE | REV LTR AR | SHEET 168 OF 188

MIL 2589 4-65 WIR

CONDUCTOR INDIVIDUAL LENGTH NUMBER	ITEM NO.	2	FROM CUT WIRE OR SHIELD STRIP WIRE OR JACKET CIRCUIT POINT 3	T I N 2	TERMINATION SPEC. 1 ITEM NO.	NO.	TO CUT WIRE OR SHIELD STRIP WIRE OR JACKET CIRCUIT POINT 3	T I N 2	TERMINATION SPEC. 1 ITEM NO.	NO.
B1475	16		E 53	25N			E 54	25N		
B1476	16		E 55	25N			E 56	25N		
B1477	16		TB23- 21	20N	111		E 56	25N		
B1478	16		E 57	25N			E 58	25N		
B1479	16		TB15- 5	20N	111		E 58	25N		
B1480	42		P40-S*	25N			P47-M*	25N		
B1481	42		P90-C	25N			P34-Z	25N		
B1482	42		P90-D	25N			P25-W	25N		
B1483	41		J22-I*	25N			TB21- 4CD	16N	107	
B1484	42		P21-U	25N			TB20- 5AB	16N	107	
B1485	42		P33-S	25N			TB20- 5AB	16N	107	
B1486	41		E 59	25N			TB23- 20	25N	111	
B1487	40		J26-C	25N	157		TB 9- 1	20N	111	
B1488	40		J26-D	25N	157		TB12- 10	20N	111	
B1489	46			225	200 85	7		400	370 48 52 84 6	
B1489B	41		TB19- 7	16N	107		SHLD B1489	25N		
B1489L			P21-D	25N			TB19- 6CD	16N	107	
B1489R			P21-C	25N			TB19- 6AB	16N	107	

1> THE STD CONDUCTOR TERMINATION FIGURES ARE PER
2> DIMENSIONS ARE IN INCHES AND TWO PLACE DECIMALS.

MANNED SPACECRAFT CENTER HOUSTON, TEXAS | SIZE A | 1900943
SCALE - NONE | REV LTR AR | SHEET 169 OF 188

MIL 2589 4-65 WIR

CONDUCTOR INDIVIDUAL LENGTH NUMBER	ITEM NO.	2	FROM CUT WIRE OR SHIELD STRIP WIRE OR JACKET CIRCUIT POINT 3	T I N 2	TERMINATION SPEC. 1 ITEM NO.	NO.	TO CUT WIRE OR SHIELD STRIP WIRE OR JACKET CIRCUIT POINT 3	T I N 2	TERMINATION SPEC. 1 ITEM NO.	NO.
B1490			TB27- 10	16N	107		E 22	25N		
B1491			TB27- 22	16N	107		E 22	25N		
B1492			TB27- 28	16N	107		E 22	25N		
B1493	41		TB20- 11CD	17N	107		TB 9- 6	20N	111	
B1494	42		P16-V	25N			P16-X	25N		
B1495	42		P16-Z	25N			P16-B*	25N		
B1496	42		P16-N*	25N			P17-G	25N		
B1497	42		P16-G	25N			P16-J	25N		
B1498	42		P16-L	25N			P16-N	25N		
B1499	42		P16-R	25N			P17-K*	25N		
B1500	42		P16-D*	25N			P16-G*	25N		
B1501	42		P16-C	25N			P16-E	25N		
B1502	7			225N	200120	7A		225N	200117118 85 6	
B1502B	41		TB19- 39	25N	107		SHLD B1502	25N		
B1502M			TB 3- 9	20N	111		TB19- 38AB	16N	107	
B1503	41		TB25- 20	20N	111		TB19- 38CD	16N	107	
B1504	16		P43-B	25N			P43-C	25N		
B1505	16		P45-B	25N			P45-C	25N		

1> THE STD CONDUCTOR TERMINATION FIGURES ARE PER
2> DIMENSIONS ARE IN INCHES AND TWO PLACE DECIMALS.

MANNED SPACECRAFT CENTER HOUSTON, TEXAS | SIZE A | 1900943
SCALE - NONE | REV LTR AR | SHEET 170 OF 188

MIL 2589 4-65 WIR

CONDUCTOR INDIVIDUAL LENGTH NUMBER	ITEM NO.	2	FROM CUT WIRE OR SHIELD STRIP WIRE OR JACKET CIRCUIT POINT 3	T I N 2	TERMINATION SPEC. 1 ITEM NO.	NO.	TO CUT WIRE OR SHIELD STRIP WIRE OR JACKET CIRCUIT POINT 3	T I N 2	TERMINATION SPEC. 1 ITEM NO.	NO.
B1506	41		E 60	25N			E 63	25N		
B1507	41		E 61	25N			TB23- 26	20N	111	
B1508	41		E 62	25N			TB23- 27	20N	111	
B1509	41		E 63	25N			TB23- 29	20N	111	
B1510	42		P37-N	25N			TB27-8A	16N	108	
B1511	42		P 5-B	25N			TB18-83AB	16N	107	
B1512	42		P 5-T*	25N			TB18-83CD	16N	107	
B1513	7			225N	200120	7A		225N	200117118 85 6	
B1513A	41		SHLD B1513	25N			E 26	25N		
B1513M			J22-A	25N			P11-U	25N		
B1514			DELETED							
B1515			DELETED							
B1515L			DELETED							
B1515R			DELETED							
B1515Y			DELETED							
B1516			DELETED							
B1517			DELETED							
B1517L			DELETED							

1> THE STD CONDUCTOR TERMINATION FIGURES ARE PER
2> DIMENSIONS ARE IN INCHES AND TWO PLACE DECIMALS.

MANNED SPACECRAFT CENTER HOUSTON, TEXAS | SIZE A | 1900943
SCALE - NONE | REV LTR AR | SHEET 171 OF 188

MIL 2589 4-65 WIR

CONDUCTOR INDIVIDUAL LENGTH NUMBER	ITEM NO.	2	FROM CUT WIRE OR SHIELD STRIP WIRE OR JACKET CIRCUIT POINT	2	T I N	2	TERMINATION SPEC. 1 ITEM NO.	NO.	TO CUT WIRE OR SHIELD STRIP WIRE OR JACKET CIRCUIT POINT	2	T I N	2	TERMINATION SPEC. 1 ITEM NO.	NO.
B1517R			DELETED											
B1517Y			DELETED											
B1518			DELETED											
B1519			DELETED											
B1519L			DELETED											
B1519R			DELETED											
B1519Y			DELETED											
B1520			DELETED											
B1521			DELETED											
B1521L			DELETED											
B1521R			DELETED											
B1521Y			DELETED											
B1522			DELETED											
B1523			DELETED											
B1523L			DELETED											
B1523R			DELETED											
B1523Y			DELETED											
B1524			DELETED											

1> THE STD CONDUCTOR TERMINATION FIGURES ARE PER
2> DIMENSIONS ARE IN INCHES AND TWO PLACE DECIMALS.

MANNED SPACECRAFT CENTER HOUSTON, TEXAS | SIZE A | 1900943
SCALE - NONE | REV LTR AR | SHEET 172 OF 188

MIL 2089 - 4-65 W/R

CONDUCTOR INDIVIDUAL LENGTH NUMBER	ITEM NO.	2	FROM CUT WIRE OR SHIELD STRIP WIRE OR JACKET CIRCUIT POINT	2	T I N	2	TERMINATION SPEC. 1 ITEM NO.	NO.	TO CUT WIRE OR SHIELD STRIP WIRE OR JACKET CIRCUIT POINT	2	T I N	2	TERMINATION SPEC. 1 ITEM NO.	NO.
B1525			DELETED											
B1525L			DELETED											
B1525R			DELETED											
B1525Y			DELETED											
B1526			DELETED											
B1527			DELETED											
B1527L			DELETED											
B1527R			DELETED											
B1527Y			DELETED											
B1528			DELETED											
B1529	42		P37-P	25N					TB27-9A	16N			108	
B1530			DELETED											
B1530L			DELETED											
B1530R			DELETED											
B1530Y			DELETED											
B1531	7			225		200	120			225		200	117 118 85	
B1531B	41		TB20- 69	16N			107		SHLD B1531	25N				
B1531W			P26-T	25N					TB20-68AB	16N			107	

1> THE STD CONDUCTOR TERMINATION FIGURES ARE PER
2> DIMENSIONS ARE IN INCHES AND TWO PLACE DECIMALS.

MANNED SPACECRAFT CENTER HOUSTON, TEXAS | SIZE A | 1900943
SCALE - NONE | REV LTR AR | SHEET 173 OF 188

MIL 2089 - 4-65 W/R

CONDUCTOR INDIVIDUAL LENGTH NUMBER	ITEM NO.	2	FROM CUT WIRE OR SHIELD STRIP WIRE OR JACKET CIRCUIT POINT	2	T I N	2	TERMINATION SPEC. 1 ITEM NO.	NO.	TO CUT WIRE OR SHIELD STRIP WIRE OR JACKET CIRCUIT POINT	2	T I N	2	TERMINATION SPEC. 1 ITEM NO.	NO.
B1532	47			225		200	85			225		200	48 52 84	
B1532B	41		TB21- 1	16N			107		SHLD B1532	25N				
B1532L			J17-L	25N					TB21-2CD	16N			107	
B1532R			J17-K	25N					TB21-2AB	16N			107	
B1533	7			225		200	120			225		200	117 118 85	
B1533B	41		TB20- 69	16N			107		SHLD B1533	25N				
B1533W			P26-U	25N					TB20-68CD	16N			107	
B1534	47			225		200	85			225		200	48 52 84	
B1534B	41		TB21- 1	16N			107		SHLD B1534	25N				
B1534L			P35-H*	25N					TB21-2CD	16N			107	
B1534R			P35-I*	25N					TB21-2AB	16N			107	
B1535	42		P96-PP	25N					P99-EE	25N				
B1536	42		P96-MM	25N					P99-D	25N				
B1537	42		P96-LL	25N					P34-I*	25N				
B1538	42		P96-NN	25N					J21-W*	25N				
B1539	42		P92-PP	25N					P99-PP	25N				
B1540	42		P92-NN	25N					P99-NN	25N				
B1541	41		P37-W	25N					TB20-5AB	16N			107	

1> THE STD CONDUCTOR TERMINATION FIGURES ARE PER
2> DIMENSIONS ARE IN INCHES AND TWO PLACE DECIMALS.

MANNED SPACECRAFT CENTER HOUSTON, TEXAS | SIZE A | 1900943
SCALE - NONE | REV LTR AR | SHEET 174 OF 188

MIL 2089 - 4-65 W/R

CONDUCTOR INDIVIDUAL LENGTH NUMBER	ITEM NO.	2	FROM CUT WIRE OR SHIELD STRIP WIRE OR JACKET CIRCUIT POINT	2	T I N	2	TERMINATION SPEC. 1 ITEM NO.	NO.	TO CUT WIRE OR SHIELD STRIP WIRE OR JACKET CIRCUIT POINT	2	T I N	2	TERMINATION SPEC. 1 ITEM NO.	NO.
B1542	65			52		23	90 91	7		225		200	86 87 85 6	
B1542B	42		TB17-17CD	16N			107		SHLD B1542	25N				
B1542E			P68-D1	11N			89		TB17-17AB	16N			107	
B1542X			P68-D2						SHLD B1542					
B1543	42		P99-MM	25N					TB19- 2AB	17N			107	
~~B1544~~	~~42~~		~~P33-Y~~ DELETED	~~25N~~					~~TB19- 2AB~~	~~17N~~			~~107~~	
B1545	42		J26-EE	25N					TB19- 3AB	17N			107	
B1546	42		P33-F	25N					TB19- 3AB	17N			107	
B1547	41		P24-C	25N					P31-U*	25N				
B1548	41		P24-D	25N					P34-Y*	25N				
B1549	41		P34-M*	25N					TB20- 4CD	16N			107	
B1550	41		J16-M	25N					P26-Y	25N				
B1551	41		J16-A	25N					P26-V*	25N				
B1552	41		J16-R	25N					P26-KK	25N				
B1553	41		J16-P	25N					TB 3- 7	20N			111	
B1554			DELETED											
B1555	41		TB 1- 7	20N			111		P26-JJ	25N				
B1556	41		TB 1- 7	20N			111		P26-X	25N				

1> THE STD CONDUCTOR TERMINATION FIGURES ARE PER
2> DIMENSIONS ARE IN INCHES AND TWO PLACE DECIMALS.

MANNED SPACECRAFT CENTER HOUSTON, TEXAS | SIZE A | 1900943
SCALE - NONE | REV LTR ~~AR~~ AV | SHEET 175 OF 188

MIL 2089 - 4-65 W/R

GMI WIRING HARNESS B ~~AR~~ AT 1900943

CONDUCTOR INDIVIDUAL LENGTH NUMBER	ITEM NO. (2)	FROM CUT WIRE OR SHIELD STRIP WIRE OR JACKET CIRCUIT POINT (2)	TIN (2)	TERMINATION SPEC. (1) ITEM NO.	NO.	TO CUT WIRE OR SHIELD STRIP WIRE OR JACKET CIRCUIT POINT (2)	TIN (2)	TERMINATION SPEC (1) ITEM NO.	NO.
B1557	41	TB 1- 7	20N	111		P26-U*	25N		
B1558	~~16~~	~~P65-X~~	~~25N~~			~~TB24- 9~~	~~20N~~	~~111~~	
B1559	~~16~~	~~P65-Y~~	~~25N~~			~~TB24- 8~~	~~20N~~	~~111~~	
B1560	~~16~~	~~P69-Z~~	~~25N~~			~~TB24- 10~~	~~20N~~	~~111~~	
B1561	41	P35-AA	25N			TB17- 90AB	16N	107	
B1562	46		225	200 85			400N	370 48 52 84	
B1562B	41	TB17- 94	16N	107		SHLD B1562	25N		
B1562L		P9-T*	25N			TB17- 93CD	16N	107	
B1562R		P9-S*	25N			TB17- 93AB	16N	107	
B1563	16	J19-A	25N			E 81	25N		
B1564	16	P37-J	25N			E 82	25N		
B1565	16	J19-S*	25N			E 83	25N		
B1566	16	P37-G	25N			E 84	25N		
B1567	45		225	200 50 54 84			225	200 84	
B1567A	41	SHLD B1567	25N			E 97	25N		
B1567L		E 83	25N			E 84	25N		
B1567R		E 81	25N			E 82	25N		
B1568	45		225	200 50 54 84			225	200 84	

(1) THE STD CONDUCTOR TERMINATION FIGURES ARE PER
(2) DIMENSIONS ARE IN INCHES AND TWO PLACE DECIMALS.

MANNED SPACECRAFT CENTER HOUSTON, TEXAS | SIZE A | 1900943
SCALE - NONE | REV LTR ~~AR~~ AT | SHEET 176 OF 188

MIL-STD-681 4-65 WIR

GMI WIRING HARNESS B AR 1900943

CONDUCTOR INDIVIDUAL LENGTH NUMBER	ITEM NO. (2)	FROM CUT WIRE OR SHIELD STRIP WIRE OR JACKET CIRCUIT POINT (2)	TIN (2)	TERMINATION SPEC. (1) ITEM NO.	NO.	TO CUT WIRE OR SHIELD STRIP WIRE OR JACKET CIRCUIT POINT (2)	TIN (2)	TERMINATION SPEC (1) ITEM NO.	NO.
B1568A	41	SHLD B1568	25N			E 97	25N		
B1568L		E 83	25N			E 84	25N		
B1568R		E 81	25N			E 82	25N		
B1569	45		225	200 50 54 84			225	200 84	
B1569A	41	SHLD B1569	25N			E 97	25N		
B1569L		E 83	25N			E 84	25N		
B1569R		E 81	25N			E 82	25N		
B1570	16	J19-B	25N			E 85	25N		
B1571	16	P37-F	25N			E 86	25N		
B1572	16	J19-T*	25N			E 87	25N		
B1573	16	P37-H	25N			E 88	25N		
B1574	45		225	200 50 54 84			225	200 84	
B1574A	41	SHLD B1574	25N			E 97	25N		
B1574L		E 87	25N			E 88	25N		
B1574R		E 85	25N			E 86	25N		
B1575	45		225	200 50 54 84			225	200 84	
B1575A	41	SHLD B1575	25N			E 97	25N		
B1575L		E 87	25N			E 88	25N		

(1) THE STD CONDUCTOR TERMINATION FIGURES ARE PER
(2) DIMENSIONS ARE IN INCHES AND TWO PLACE DECIMALS.

MANNED SPACECRAFT CENTER HOUSTON, TEXAS | SIZE A | 1900943
SCALE - NONE | REV LTR AR | SHEET 177 OF 188

MIL-STD-681 4-65 WIR

GMI WIRING HARNESS B AR 1900943

CONDUCTOR INDIVIDUAL LENGTH NUMBER	ITEM NO. (2)	FROM CUT WIRE OR SHIELD STRIP WIRE OR JACKET CIRCUIT POINT (2)	TIN (2)	TERMINATION SPEC. (1) ITEM NO.	NO.	TO CUT WIRE OR SHIELD STRIP WIRE OR JACKET CIRCUIT POINT (2)	TIN (2)	TERMINATION SPEC (1) ITEM NO.	NO.
B1575R		E 85	25N			E 86	25N		
B1576	45		225	200 50 54 84			225	200 84	
B1576A	41	SHLD B1576	25N			E 97	25N		
B1576L		E 87	25N			E 88	25N		
B1576R		E 85	25N			E 86	25N		
B1577	16	J19-E*	25N			E 89	25N		
B1578	16	P11-M	25N			E 90	25N		
B1579	16	J19-F*	25N			E 91	25N		
B1580	16	P11-L	25N			E 92	25N		
B1581	45		225	200 50 54 84			225	200 84	
B1581A	41	SHLD B1581	25N			E 98	25N		
B1581L		E 91	25N			E 92	25N		
B1581R		E 89	25N			E 90	25N		
B1582	45		225	200 50 54 84			225	200 84	
B1582A	41	SHLD B1582	25N			E 98	25N		
B1582L		E 91	25N			E 92	25N		
B1582R		E 89	25N			E 90	25N		
B1583	45		225	200 50 54 84			225	200 84	

(1) THE STD CONDUCTOR TERMINATION FIGURES ARE PER
(2) DIMENSIONS ARE IN INCHES AND TWO PLACE DECIMALS.

MANNED SPACECRAFT CENTER HOUSTON, TEXAS | SIZE A | 1900943
SCALE - NONE | REV LTR AR | SHEET 178 OF 188

MIL-STD-681 4-65 WIR

GMI WIRING HARNESS B AR 1900943

CONDUCTOR INDIVIDUAL LENGTH NUMBER	ITEM NO. (2)	FROM CUT WIRE OR SHIELD STRIP WIRE OR JACKET CIRCUIT POINT (2)	TIN (2)	TERMINATION SPEC. (1) ITEM NO.	NO.	TO CUT WIRE OR SHIELD STRIP WIRE OR JACKET CIRCUIT POINT (2)	TIN (2)	TERMINATION SPEC (1) ITEM NO.	NO.
B1583A	41	SHLD B1583	25N			E 98	25N		
B1583L		E 91	25N			E 92	25N		
B1583R		E 89	25N			E 90	25N		
B1584	16	J19-Q*	25N			E 93	25N		
B1585	16	P11-N	25N			E 94	25N		
B1586	16	J19-R*	25N			E 95	25N		
B1587	16	P11-P	25N			E 96	25N		
B1588	45		225	200 50 54 84			225	200 84	
B1588A	41	SHLD B1588	25N			E 98	25N		
B1588L		E 95	25N			E 96	25N		
B1588R		E 93	25N			E 94	25N		
B1589	45		225	200 50 54 84			225	200 84	
B1589A	41	SHLD B1589	25N			E 98	25N		
B1589L		E 95	25N			E 96	25N		
B1589R		E 93	25N			E 94	25N		
B1590	45		225	200 50 54 84			225	200 84	
B1590A	41	SHLD B1590	25N			E 98	25N		
B1590L		E 95	25N			E 96	25N		

(1) THE STD CONDUCTOR TERMINATION FIGURES ARE PER
(2) DIMENSIONS ARE IN INCHES AND TWO PLACE DECIMALS.

MANNED SPACECRAFT CENTER HOUSTON, TEXAS | SIZE A | 1900943
SCALE - NONE | REV LTR AR | SHEET 179 OF 188

MIL-STD-681 4-65 WIR

GMI WIRING HARNESS B AR 1900943

CONDUCTOR INDIVIDUAL LENGTH NUMBER	ITEM NO.	2	FROM CUT WIRE OR SHIELD STRIP WIRE OR JACKET CIRCUIT POINT	2	T I N	2	TERMINATION SPEC. 1	ITEM NO.	NO.	TO CUT WIRE OR SHIELD STRIP WIRE OR JACKET CIRCUIT POINT	2	T I N	2	TERMINATION SPEC. 1	ITEM NO.	NO.
B1590R			E 93		25N					E 94		25N				
B1591	16		E 97		25N					E 98		25N				
B1592	16		J19-V		25N					E 97		25N				
B1594	65			225		200	86 87 85				225		200	86 87 85		
B1594A	41		SHLD B1594		25N					P14-B		25N				
B1594B	41		TB17- 9CD		16N		107			SHLD B1594		25N				
B1594E			P14-C		25N					TB17- 9AB		16N		107		
B1595	65			52		23 90 91					225		200	86 87 85		
B1595B	41		TB17- 9CD		16N		107			SHLD B1595		25N				
B1595E			P94-A1		11N		89			TB17- 9AB		16N		107		
B1595X			P94-A2							SHLD B1595						
B1596	65			225		200	86 87 85				225		200	86 87 85		
B1596A	41		SHLD B1596		25N					P14-K*		25N				
B1596B	41		TB17- 11CD		16N		107			SHLD B1596		25N				
B1596E			P14-J*		25N					TB17- 11AB		16N		107		
B1597	65			52		23 90 91					225		200	86 87 85		
B1597B	41		TB17- 11CD		16N		107			SHLD B1597		25N				
B1597E			P94-B1		11N		89			TB17- 11AB		16N		107		

1 THE STD CONDUCTOR TERMINATION FIGURES ARE PER
2 DIMENSIONS ARE IN INCHES AND TWO PLACE DECIMALS.

MANNED SPACECRAFT CENTER HOUSTON, TEXAS | SIZE A | 1900943
SCALE - NONE | REV LTR AR | SHEET 180 OF 188

MIL 2065 - 4-63 W-R

GMI WIRING HARNESS B ~~AR~~ AT 1900943

CONDUCTOR INDIVIDUAL LENGTH NUMBER	ITEM NO.	2	FROM CUT WIRE OR SHIELD STRIP WIRE OR JACKET CIRCUIT POINT	2	T I N	2	TERMINATION SPEC. 1	ITEM NO.	NO.	TO CUT WIRE OR SHIELD STRIP WIRE OR JACKET CIRCUIT POINT	2	T I N	2	TERMINATION SPEC. 1	ITEM NO.	NO.
B1597X			P94-B2							SHLD B1597						
B1598	65			225		200	86 87 85				225		200	86 87 85		
B1598A	41		SHLD B1598		25N					P14-Q*		25N				
B1598B	41		TB17- 6CD		16N		107			SHLD B1598		25N				
B1598E			P14-P*		25N					TB17- 6AB		16N		107		
B1599	65			52		23 90 91					225		200	86 87 85		
B1599B	41		TB17- 6CD		16N		107			SHLD B1599		25N				
B1599E			P94-C1		11N		89			TB17- 6AB		16N		107		
B1599X			P94-C2							SHLD B1599						
B1600	65			225		200	86 87 85				225		200	86 87 85		
B1600A	41		SHLD B1600		25N					P14-M*		N				
B1600B	41		TB17- 8CD		16N		107			SHLD B1600		N				
B1600E			P14-N*		25N					TB17- 8AB		N		107		
B1601	65			52		23 90 91					225		200	86 87 85		
B1601B	41		TB17- 8CD		16N		107			SHLD B1601		25N				
B1601E			P94-D1		11N		89			TB17- 8AB		16N		107		
B1601X			P94-D2							SHLD B1601						
B1624	41		P92-N		25N					J25-P		25N				

1 THE STD CONDUCTOR TERMINATION FIGURES ARE PER
2 DIMENSIONS ARE IN INCHES AND TWO PLACE DECIMALS.

MANNED SPACECRAFT CENTER HOUSTON, TEXAS | SIZE A | 1900943
SCALE - NONE | REV LTR ~~AR~~ AT | SHEET 181 OF 188

MIL 2065 - 4-63 W-R

WIRING HARNESS "B" AU 1900943

CONDUCTOR INDIVIDUAL LENGTH NUMBER	ITEM NO.	2	FROM CUT WIRE OR SHIELD STRIP WIRE OR JACKET CIRCUIT POINT	2	T I N	2	TERMINATION SPEC. 1	ITEM NO.	NO.	TO CUT WIRE OR SHIELD STRIP WIRE OR JACKET CIRCUIT POINT	2	T I N	2	TERMINATION SPEC. 1	ITEM NO.	NO.
B1625	46			225		200	85				400		370	48 52 84		
B1625B	41		TB19-80		16N		107			SHLD B1625		25N				
B1625R			P84-HH		25N					TB19-79AB		16N		107		
B1625L			P84-JJ		25N					TB19-79CD		16N		107		
B1626	46			225		200	85				400		370	48 52 84		
B1626B	41		TB19-82		16N		107			SHLD B1626		25N				
B1626R			P85-HH		25N					TB19-81AB		16N		107		
B1626L			P85-JJ		25N					TB19-81CD		16N		107		

1 THE STD CONDUCTOR TERMINATION FIGURES ARE PER
2 DIMENSIONS ARE IN INCHES AND TWO PLACE DECIMALS.

MANNED SPACECRAFT CENTER HOUSTON, TEXAS | SIZE A | 1900943
SCALE - NONE | REV LTR AU | SHEET 182 of 188

MIL 2065 - 4-63 W-R

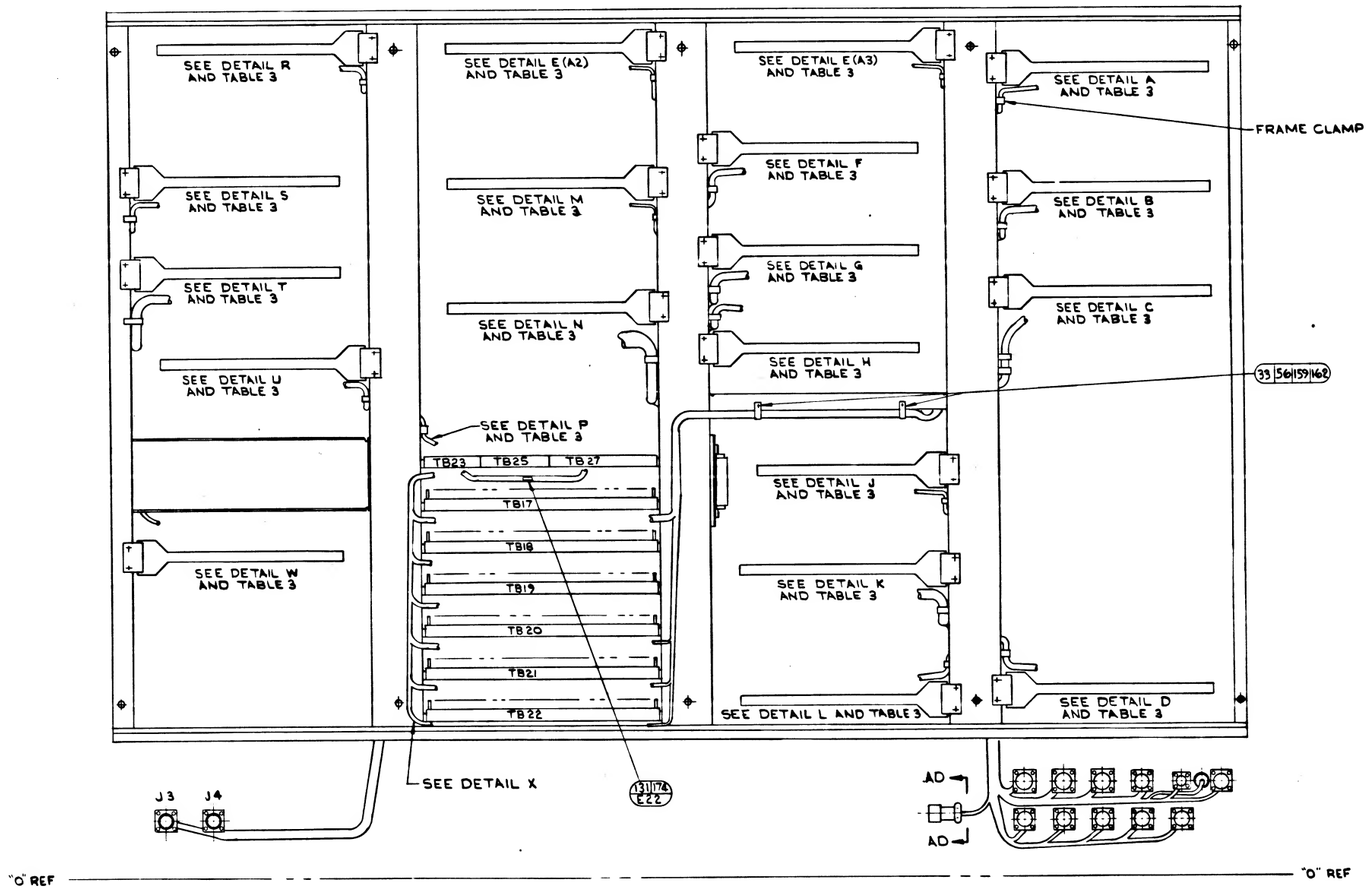

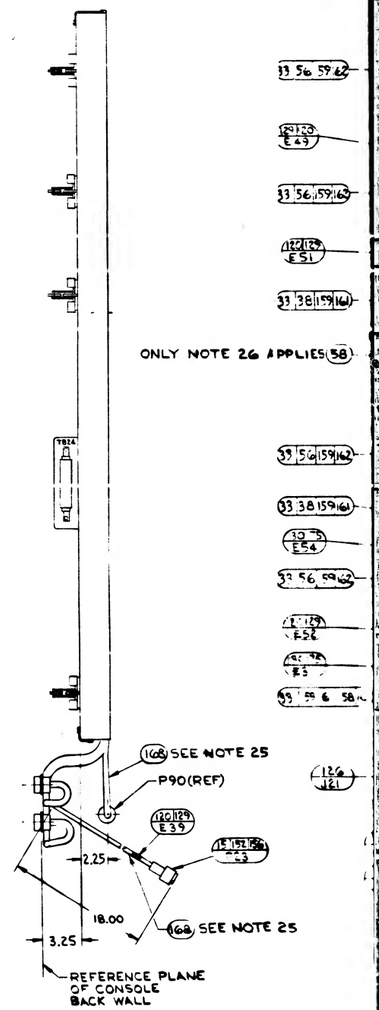

DETAIL	DRAWER
A	MONITOR PANEL (MPL)
B	TEMP MONITOR & CONTROL (TMC)
C	COMPUTER SIMULATOR (CMS)
D	PWR SUPPLY & LOAD PANEL (PDL)
E	IRIG MONITOR SCOPE (IMS) (A2)
	PIPA MONITOR SCOPE (PMS) (A3)
F	GIMBAL POSITION CONTROL (GPC)
G	TEST CONTROL (TCL)
H	TEST SELECTOR (TES)
J	MONITOR SIGNAL ISOLATION PANEL (MSI)
K	DIGITAL RECORDER (PRT)
L	ELECTRONICS POWER SUPPLY (NPS)
M	DUAL BEAM SCOPE (DBS)
N	PRIMARY SIGNAL SELECT (PSS)
P	COAXIAL DISTRIBUTION PANEL (SSS)
R	DIGITAL VOLTMETER (DVM)
S	PHASE ANGLE VOLTMETER (PAV)
T	COUNTER (CTR)
U	OSCILLOGRAPH SIGNAL SELECT (RSS)
W	SIGNAL GENERATOR (SGN)

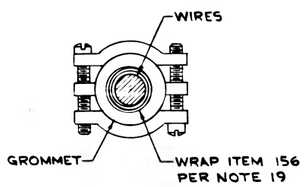

VIEW AD-AD

1900943 SH 133

1/1900943

REVISIONS					
SYM	ZONE	DESCRIPTION	CHG NO	DATE	APPD
		SEE SHT 1 FOR REVISION RECORD			

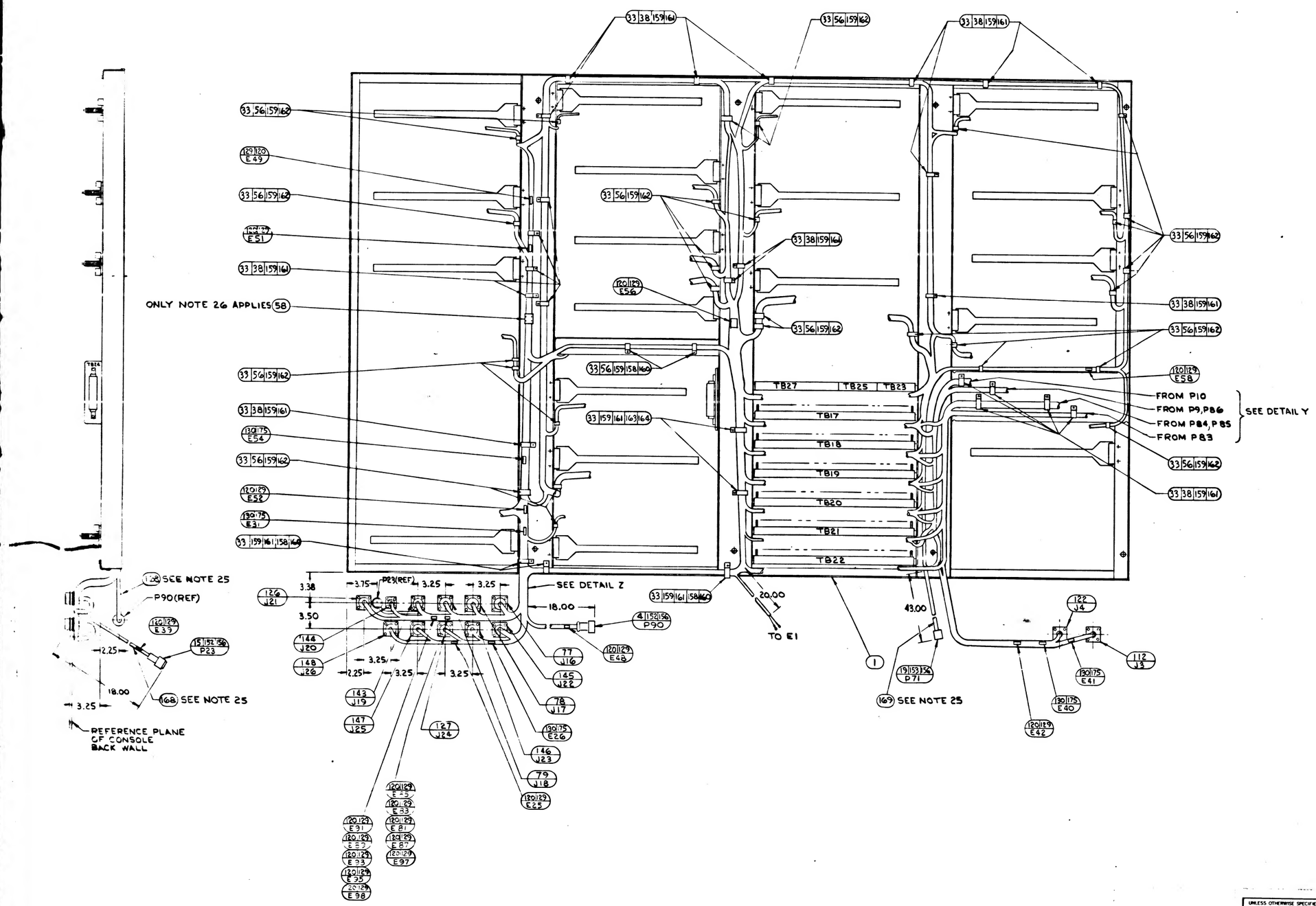

FOR INFORMATION ONLY

CLASS B RELEASE TDR No. _____ DATE

UNLESS OTHERWISE SPECIFIED DIMENSIONS ARE IN INCHES TOLERANCES ON FRACTIONS ± DECIMALS ± ANGLES ±	AC SPARK PLUG DIVISION, GMC MILWAUKEE, WISCONSIN	MANNED SPACECRAFT CENTER HOUSTON, TEXAS
DO NOT SCALE THIS DRAWING	DRAWN / DATE / CHECKED 17 MAR 64 / APPROVAL / APPROVAL	WIRING HARNESS "B" & FRAME ASSEMBLY
MATERIAL	NASA APPROVAL	CODE IDENT NO. / SIZE J / 1900943
CONTRACT NAS 9-497	MIT APPROVAL	SCALE / SHEET 103 OF 108

1900943 SH 1-3

2/1900943

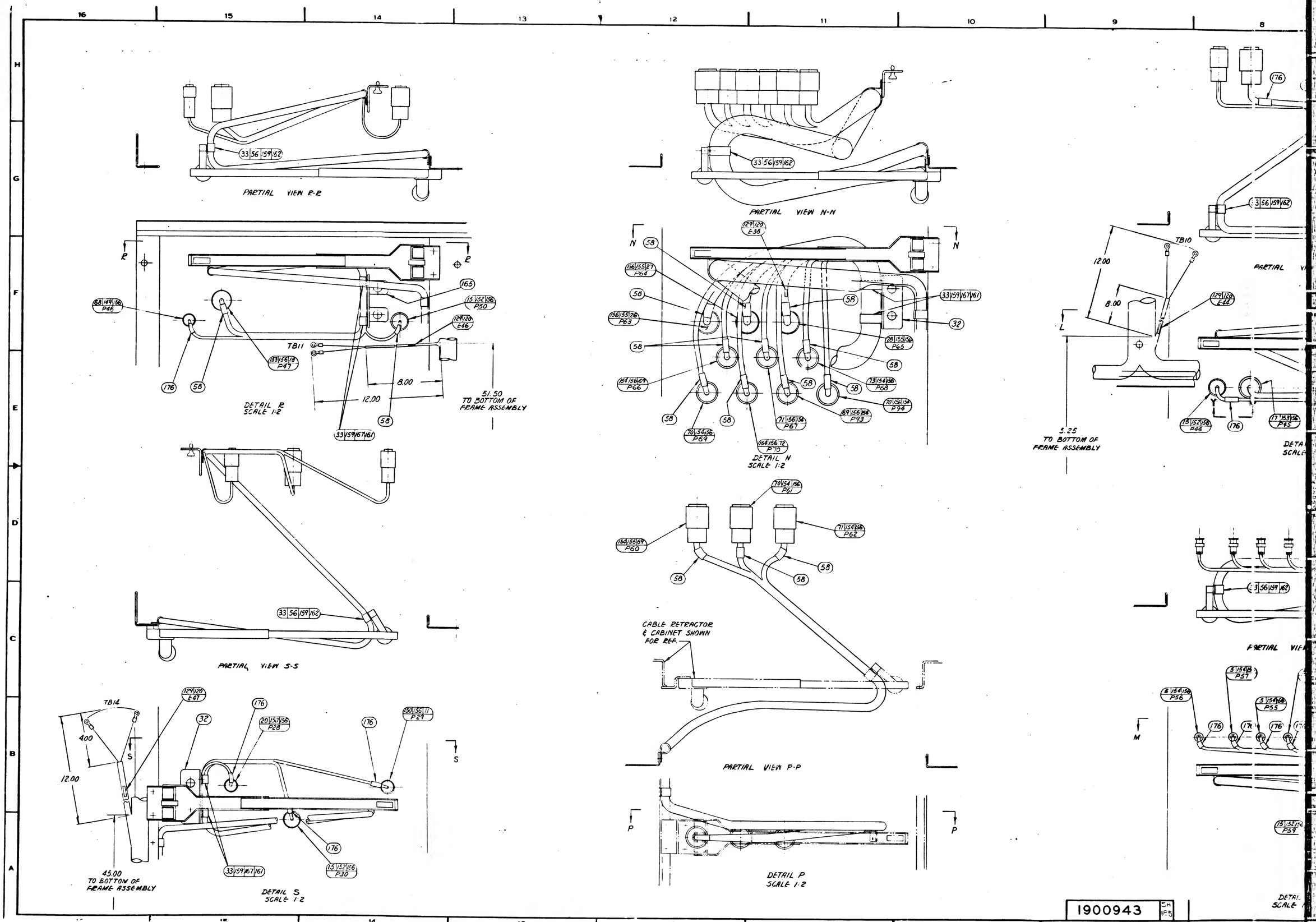
PARTIAL VIEW R-R
DETAIL R
SCALE 1:2
51.50
TO BOTTOM OF
FRAME ASSEMBLY
PARTIAL VIEW S-S
PARTIAL VIEW N-N
DETAIL N
SCALE 1:2
CABLE RETRACTOR
& CABINET SHOWN
FOR REF.
PARTIAL VIEW P-P
DETAIL P
SCALE 1:2
45.00
TO BOTTOM OF
FRAME ASSEMBLY
DETAIL S
SCALE 1:2
5.25
TO BOTTOM OF
FRAME ASSEMBLY
1900943

1/1900943

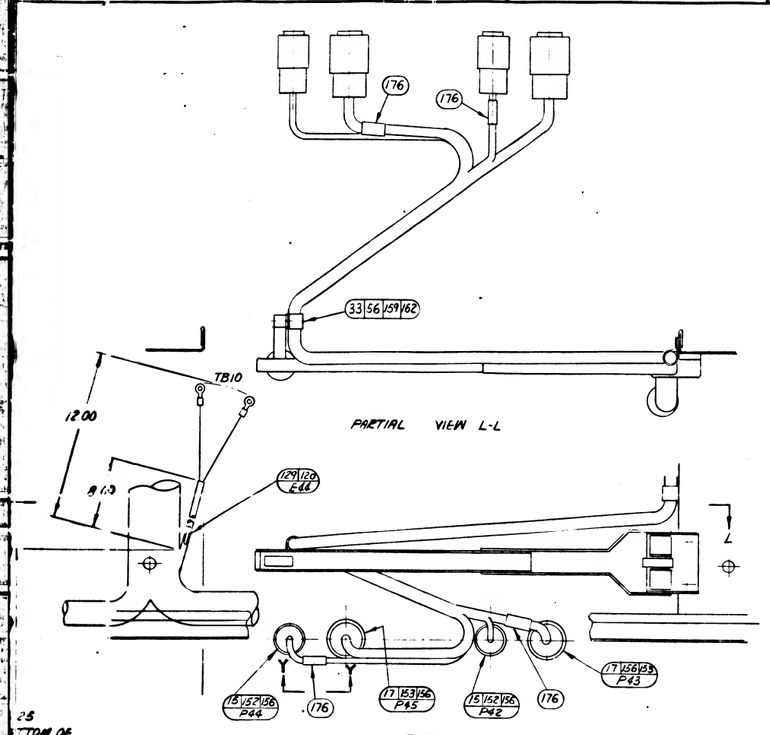

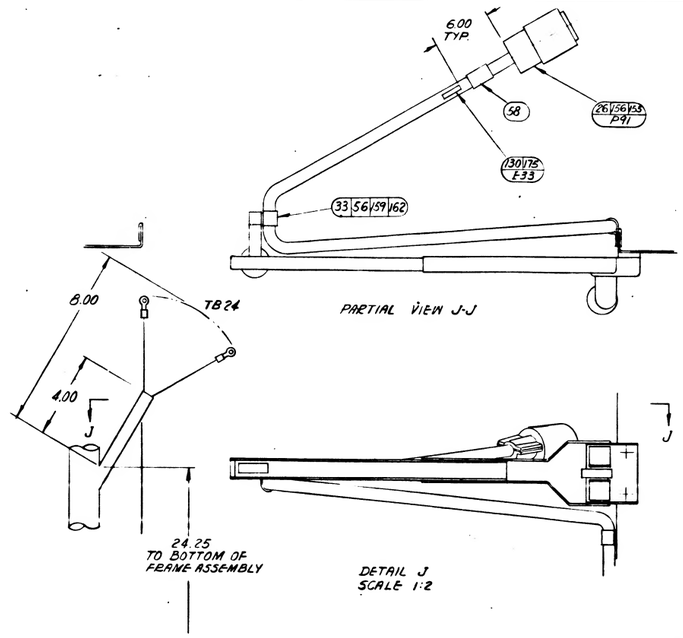

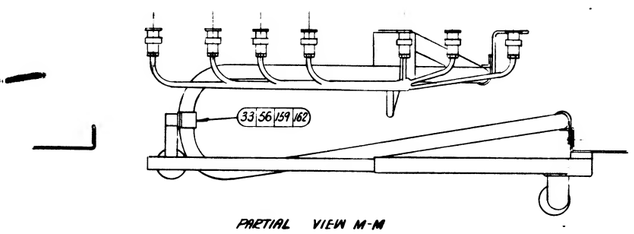

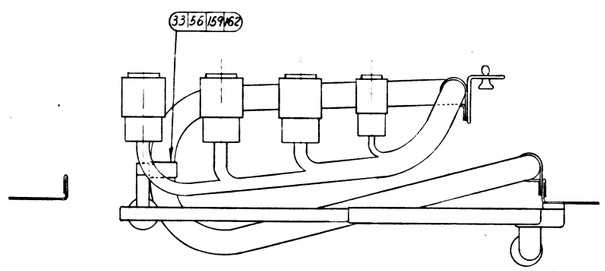

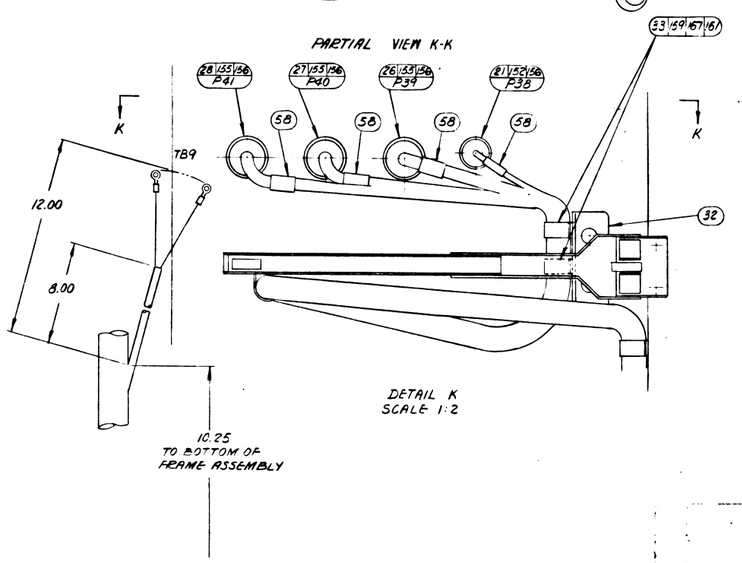

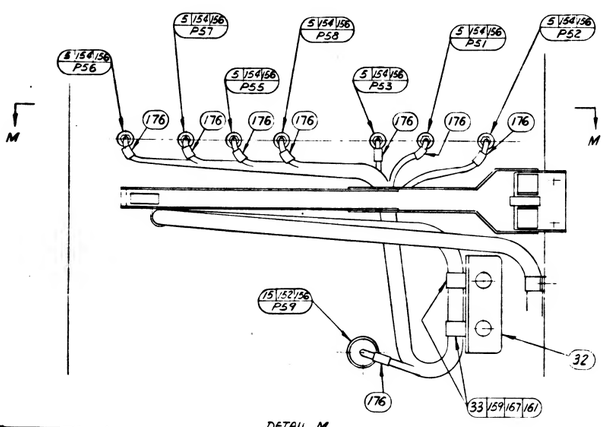

REVISIONS

SYM	ZONE	DESCRIPTION	CHG -0	DATE	APPD
		SEE SHT 1 FOR REVISION RECORD			

FOR INFORMATION ONLY

CLASS B RELEASE TDR No._____ DATE

UNLESS OTHERWISE SPECIFIED DIMENSIONS ARE IN INCHES TOLERANCES ON FRACTIONS ± DECIMALS ± ANGLES ±	AC SPARK PLUG DIVISION, GMC MILWAUKEE, WISCONSIN ACSP PN	MANNED SPACECRAFT CENTER HOUSTON TEXAS
DO NOT SCALE THIS DRAWING	DRAWN 5 MARCH 68 DATE CHECKED 17 MAR 68 APPROVAL APPROVAL	WIRING HARNESS "B" & FRAME ASSEMBLY
MATERIAL	NASA APPROVAL MIT APPROVAL	CODE IDENT NO J — 1900943
CONTRACT NAS 9-497		SCALE 1:2 — SHEET 125 OF 88

1900943 SH 1 REV

2/1900943

TABLE 3

LINE DIAGRAM A (FOR DETAIL A)

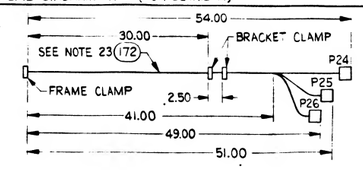

LINE DIAGRAM B (FOR DETAIL B)

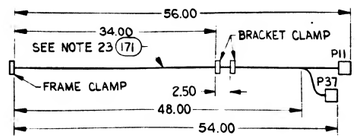

LINE DIAGRAM C (FOR DETAIL C)

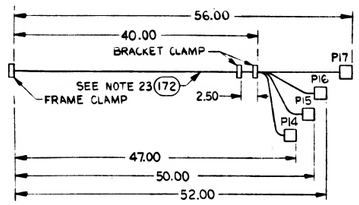

LINE DIAGRAM D (FOR DETAIL D)

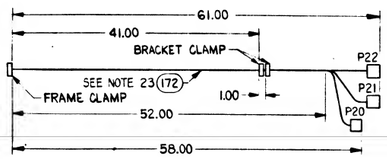

LINE DIAGRAM E (FOR DETAIL E - A2, A3)

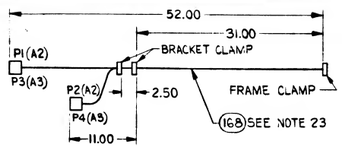

LINE DIAGRAM F (FOR DETAIL F)

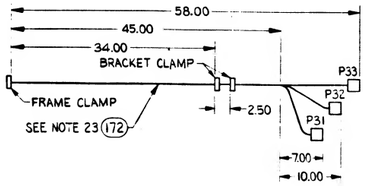

LINE DIAGRAM G (FOR DETAIL G)

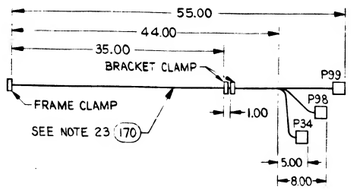

LINE DIAGRAM H (FOR DETAIL H)

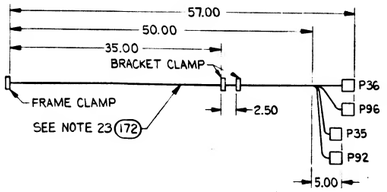

LINE DIAGRAM J (FOR DETAIL J)

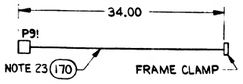

LINE DIAGRAM K (FOR DETAIL K)

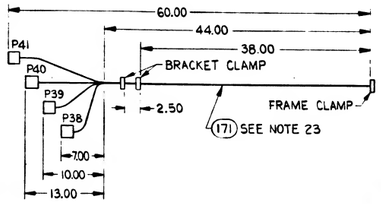

LINE DIAGRAM L (FOR DETAIL L)

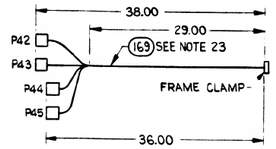

LINE DIAGRAM M (FOR DETAIL M)

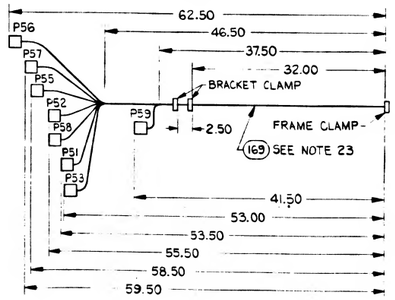

LINE DIAGRAM N (FOR DETAIL N)

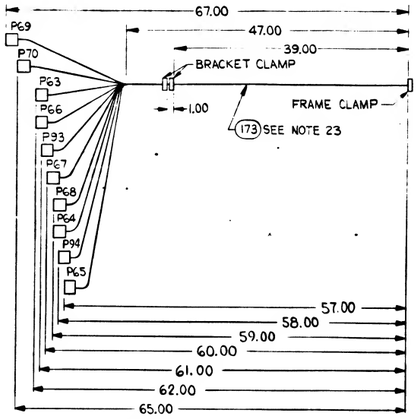

LINE DIAGRAM P (FOR DETAIL P)

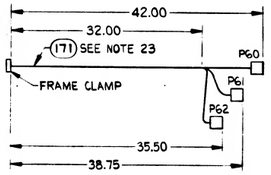

LINE DIAGRAM R (FOR DETAIL R)

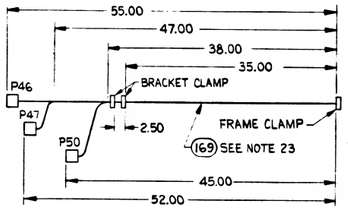

LINE DIAGRAM S (FOR DETAIL S)

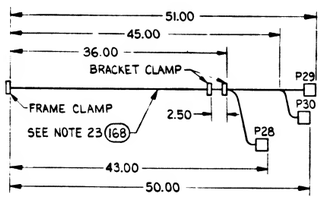

LINE DIAGRAM T (FOR DETAIL T)

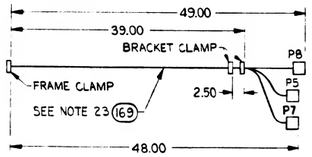

LINE DIAGRAM U (FOR DETAIL U)

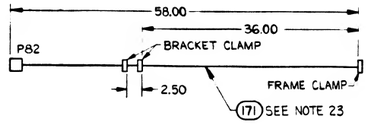

LINE DIAGRAM W (FOR DETAIL W)

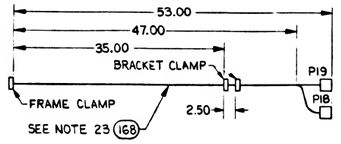

TABLE 2

HARNESS PLUG SYMBOL	MATING DRAWER RECEPTACLE SYMBOL
P1	A2 J1
P2	A2 J3
P3	A3 J1
P4	A3 J3
P5	A4 J1
P7	A4 J3
P9	A26 J6
P10	A26 J7
P11	A14 J2
P14	A5 J1
P15	A5 J2
P16	A5 J3
P17	A5 J4
P20	A7 J1
P21	A7 J2
P22	A7 J3
P23	A8 J1
P24	A9 J1
P25	A9 J2
P26	A9 J3
P31	A11 J1
P32	A11 J2
P33	A11 J3
P34	A12 J1
P35	A13 J1
P36	A13 J2
P37	A14 J1
P38	A15 J1
P39	A15 J2
P40	A15 J3
P41	A15 J4
P47	A16 J2
P50	A16 J3
P60	A20 J28
P61	A20 J29
P62	A20 J30
P63	A21 J1
P64	A21 J2
P65	A21 J3
P66	A21 J4
P67	A21 J5
P68	A21 J6
P69	A21 J7
P70	A21 J8
P71	A22 J1
P82	A26 J1
P83	A26 J2
P84	A26 J3
P85	A26 J4
P86	A26 J5
P90	A3 J4
P91	A3 J1
P92	A13 J3
P93	A2 J9
P94	A2 J10
P96	A12 J4
P98	A12 J2
P99	A12 J3

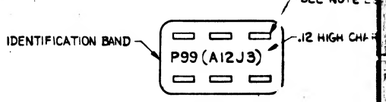

VIEW X-X
SCALE 2:1

TABLE 1

HARNESS PLUG SYMBOL	MATING DRAWER RECEPTACLE SYMBOL
P8	A4 J4
P18	A6 J1
P19	A6 J2
P28	A10 J1
P29	A10 J2
P30	A10 J3
P42	A16A J1
P43	A16A J2
P44	A16A 2J1
P45	A16A 2J2
P46	A18 J1
P51	A19 J1
P52	A19 J2
P53	A19 J3
P55	A19 J5
P56	A19 J6
P57	A19 J7
P58	A19 J8
P59	A19 J10

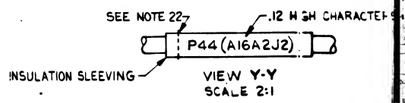

VIEW Y-Y
SCALE 2:1

1/4 1900943

TABLE 2

HARNESS PLUG SYMBOL	MATING DRAWER RECEPTACLE SYMBOL
P1	A2J1
P2	A2J3
P3	A3J1
P4	A3J3
P5	A4J1
P7	A4J3
P9	A26J6
P10	A26J7
P11	A14J2
P14	A5J1
P15	A5J2
P16	A5J3
P17	A5J4
P20	A7J1
P21	A7J2
P22	A7J3
P23	A8J1
P24	A9J1
P25	A9J2
P26	A9J3
P31	A11J1
P32	A11J2
P33	A11J3
P34	A12J1
P35	A13J1
P36	A13J2
P37	A14J1
P38	A15J1
P39	A15J2
P40	A15J3
P41	A15J4
P47	A18J2
P50	A18J5
P60	A20J28
P61	A20J29
P62	A20J30
P63	A21J1
P64	A21J2
P65	A21J3
P66	A21J4
P67	A21J5
P68	A21J6
P69	A21J7
P70	A21J8
P71	A22J1
P82	A26J1
P83	A26J2
P84	A26J3
P85	A26J4
P86	A26J5
P90	A30J4
P91	A31J1
P92	A13J3
P93	A21J9
P94	A21J10
P96	A13J4
P98	A12J2
P99	A12J3

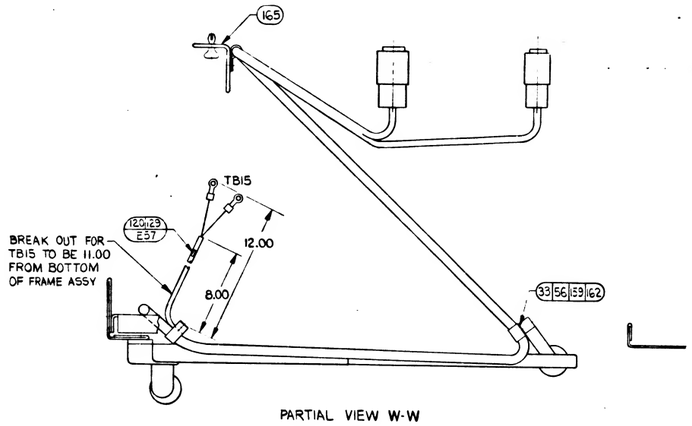

PARTIAL VIEW W-W

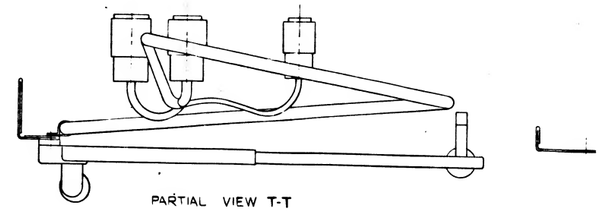

PARTIAL VIEW T-T

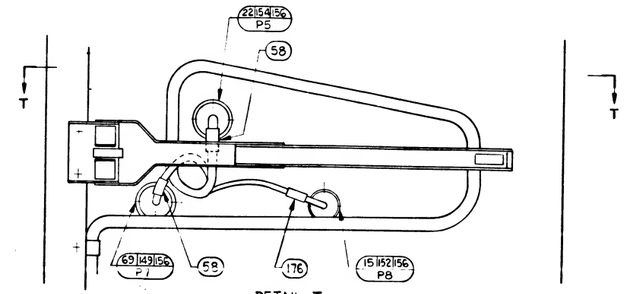

DETAIL T
SCALE 1:2

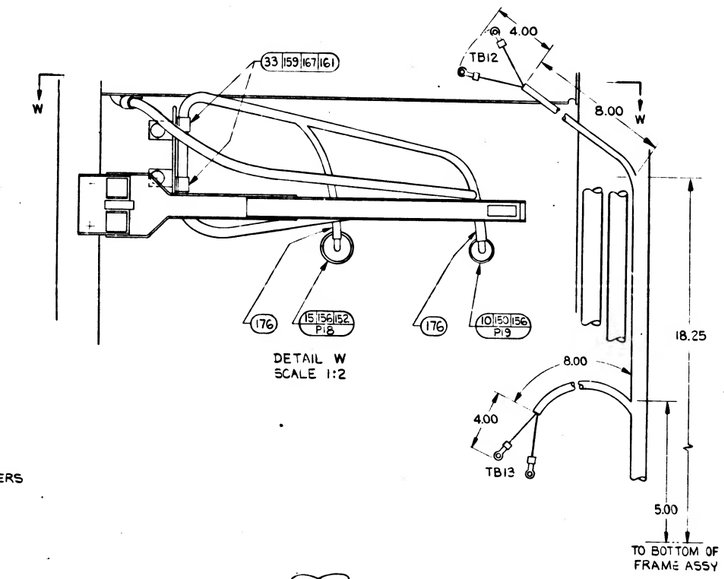

DETAIL W
SCALE 1:2

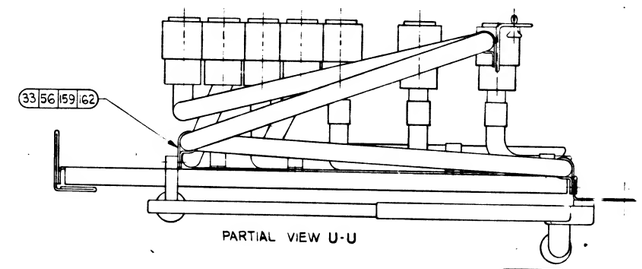

PARTIAL VIEW U-U

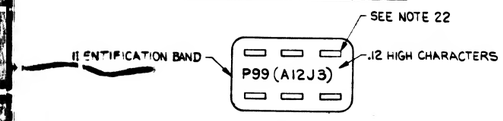

VIEW X-X
SCALE 2:1

TABLE 1

HARNESS PLUG SYMBOL	MATING DRAWER RECEPTACLE SYMBOL
P8	A4J4
P18	A6J1
P19	A6J2
P28	A10J1
P29	A10J2
P30	A10J3
P42	A16A1J1
P43	A16A1J2
P44	A16A2J1
P45	A16A2J2
P46	A18J1
P51	A19J1
P52	A19J2
P53	A19J3
P55	A19J5
P56	A19J6
P57	A19J7
P58	A19J8
P59	A19J10

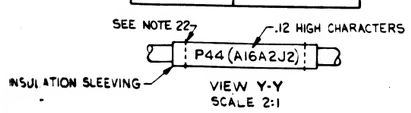

VIEW Y-Y
SCALE 2:1

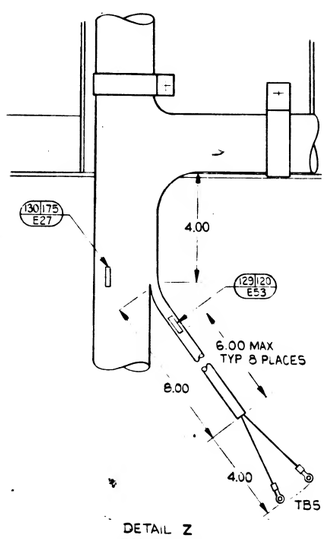

DETAIL Z
SCALE - NONE

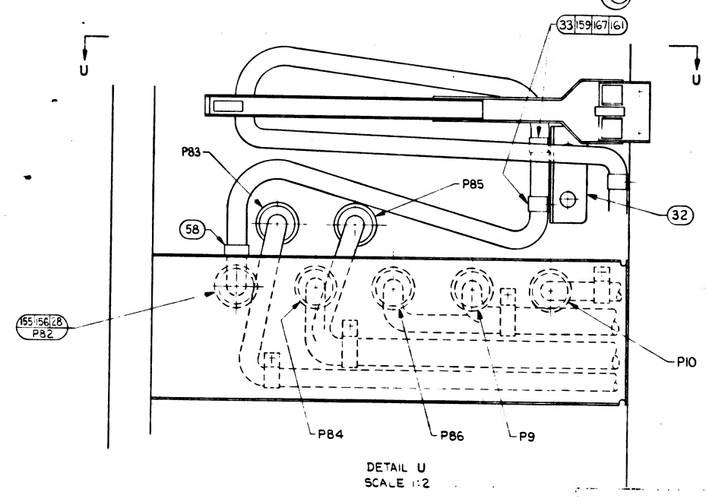

DETAIL U
SCALE 1:2

REVISIONS

SYM	ZONE	DESCRIPTION	CHG NO	DATE	APPD
		SEE SHT 1 FOR REVISION RECORD			

FOR INFORMATION ONLY

CLASS B RELEASE TDR No._____ DATE

UNLESS OTHERWISE SPECIFIED DIMENSIONS ARE IN INCHES TOLERANCES ON FRACTIONS + — — — DECIMALS + — — — ANGLES + — — — DO NOT SCALE THIS DRAWING MATERIAL CONTRACT NAS 9-487	AC SPARK PLUG DIVISION GMC MILWAUKEE WISCONSIN ACSP PN — DRAWN DATE 3 MAR 64 CHECKED 17 MAR 64 APPROVAL APPROVAL NASA APPROVAL M.I.T. APPROVAL	MANNED SPACECRAFT CENTER HOUSTON TEXAS WIRING HARNESS "B" & FRAME ASSEMBLY CODE IDENT NO SIZE J 1900943 SCALE — SHEET 186 OF 186

1900943 SH 186

2-/1900943

1900943 LR

REVISIONS					
SYM	ZONE	DESCRIPTION	CHG NO	DATE	APPD
		SEE SHT 1 FOR REVISION RECORD			

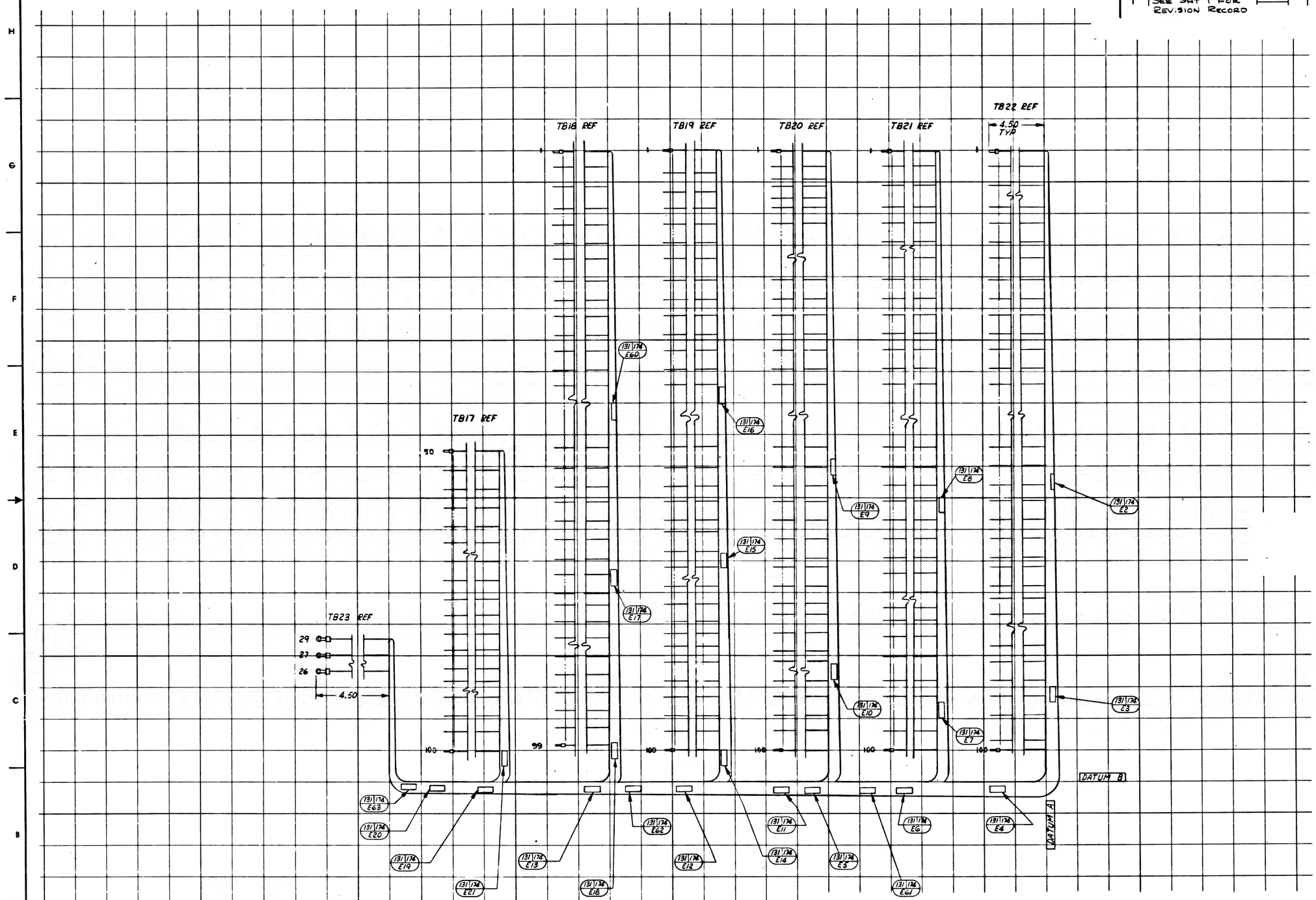

DETAIL X

UNLESS OTHERWISE SPECIFIED DIMENSIONS ARE IN INCHES TOLERANCES ON FRACTIONS ± — DECIMALS ± — ANGLES ± —	AC SPARK PLUG DIVISION, GMC MILWAUKEE WISCONSIN	MANNED SPACECRAFT CENTER HOUSTON TEXAS	
	ACSP PN	DRAWN L. Schwegler DATE 1-28-64	WIRING HARNESS "B" & FRAME ASSEMBLY
		CHECKED 17 MAR 64	
		APPROVAL 18 MAR 64	
DO NOT SCALE THIS DRAWING		APPROVAL	
MATERIAL —		NASA APPROVAL	CODE IDENT NO / SIZE E / 1900943
NEXT ASSY / USED ON		MIT APPROVAL	SCALE FULL / SHEET 8 OF 18
APPLICATION	CONTRACT NAS 9-897		

1900943 AR

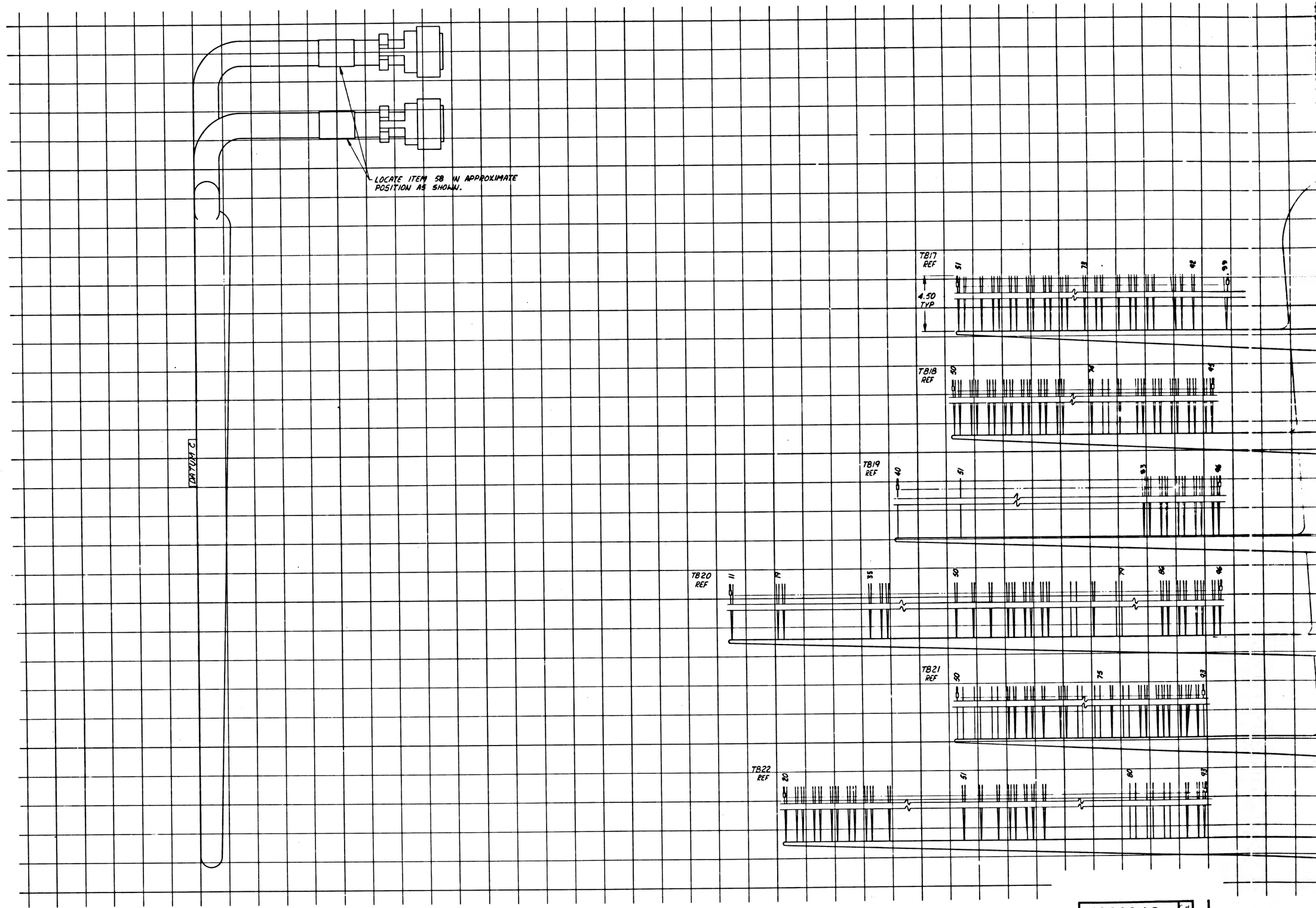

1900943

1-41-900943

REVISIONS					
SYM	ZONE	DESCRIPTION	CHG NO	DATE	APPD
		SEE SHT 1 FOR REVISION RECORD			

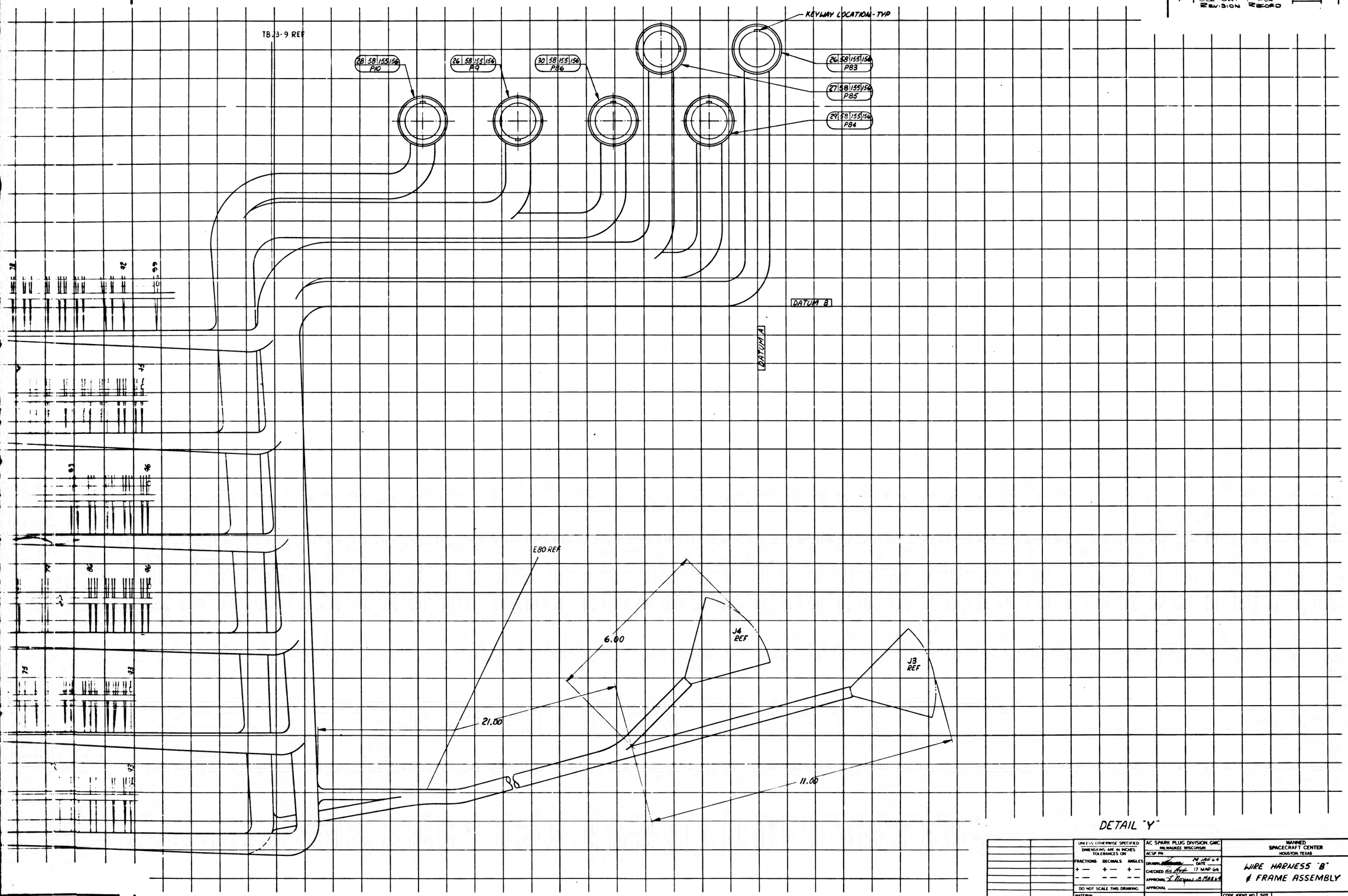

UNLESS OTHERWISE SPECIFIED DIMENSIONS ARE IN INCHES TOLERANCES ON FRACTIONS ± — DECIMALS ± — ANGLES ± —	AC SPARK PLUG DIVISION, GMC MILWAUKEE WISCONSIN	MANNED SPACECRAFT CENTER HOUSTON, TEXAS	
DO NOT SCALE THIS DRAWING	ACSP PN		
	DRAWN 24 JAN 64 DATE	WIRE HARNESS "B" & FRAME ASSEMBLY	
	CHECKED 17 MAR 64		
	APPROVAL		
MATERIAL	APPROVAL		
NEXT ASSY / USED ON	NASA APPROVAL	CODE IDENT NO / SIZE J2	1900943
APPLICATION	CONTRACT NAS 9-497	MIT APPROVAL / SCALE 1:1	SHEET 86 OF 86

1900943 AK

1900943

27/1900943

1900944

REVISIONS					
SYM	ZONE	DESCRIPTION	CHG NO.	DATE	APPD.

NOTES:

1. INTERPRET DRAWING IN ACCORDANCE WITH STANDARDS PRESCRIBED BY MIL-D-70327.
2. MATERIAL: STAINLESS STEEL PER QQ-S-763, CLASS 303, COND A, CF (ES-380).
3. FINISH: PASSIVATE PER MIL-F-14072 (SIG C) FINISH E-300 (ES-585).
4. UNLESS OTHERWISE SPECIFIED:
   A. SURFACE ROUGHNESS MUST NOT EXCEED 63√.
   B. ALL CORNERS TO BE .005 TO .015 R OR CHAMFER.
5. MUST BE FREE FROM BURRS.
6. IDENTIFY USING DRAWING NUMBER AND REVISION LETTER PER MIL-STD-130 (ES-267).

FOR INFORMATION ONLY

CLASS B RELEASE TDR No. 04408 **DATE** 11/5/63

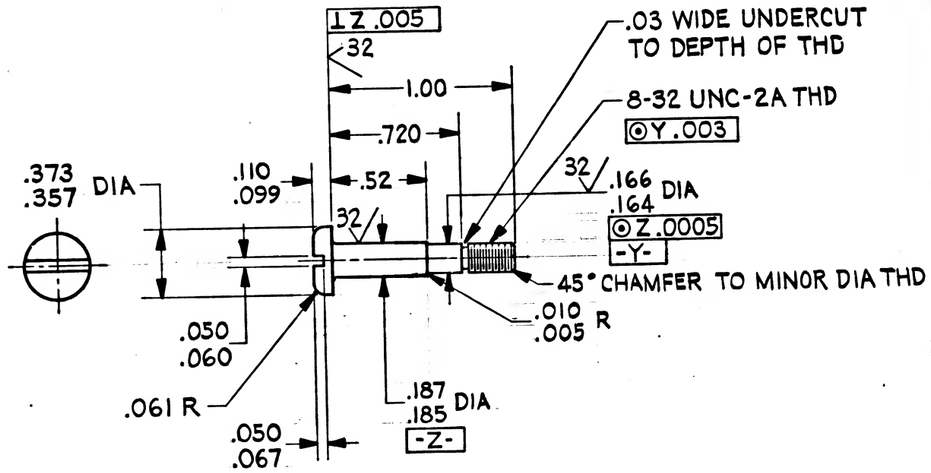

1900606-011	1900606-011
NEXT ASSY	USED ON
APPLICATION	

UNLESS OTHERWISE SPECIFIED
DIMENSIONS ARE IN INCHES
TOLERANCES ON

FRACTIONS	DECIMALS	ANGLES
+ —	±.005	+2°
— —	±.02	−2°

DO NOT SCALE THIS DRAWING

MATERIAL SEE NOTE 2

CONTRACT NAS9-497

AC SPARK PLUG DIVISION, GMC
MILWAUKEE, WISCONSIN

ACSP PN

DRAWN C. LENZ DATE 17 OCT 63
CHECKED R. Ronde 18 OCT 63
APPROVAL B.R. Shumann 21 Oct 63
APPROVAL C. Jedeiman Nov 4, 1963
NASA APPROVAL W. J. Rhue 11-5-63
MIT APPROVAL W. Hughes 5 Nov 63

MANNED SPACECRAFT CENTER
HOUSTON, TEXAS

SCREW, SHOULDER

CODE IDENT NO. | SIZE C | 1900944

SCALE 2:1 | SHEET 1 OF 1

MIL 1077C—P

INCHES 0 1 2
PHOTOGRAPHIC SCALE ONLY

NOTES:

1. INTERPRET DRAWING IN ACCORDANCE WITH STANDARDS PRESCRIBED BY MIL-D-70327.

2. MATERIAL: STAINLESS STEEL QQ-S-763, CLASS 302 OR 304, COND. A, HF (ES-376).

3. UNLESS OTHERWISE SPECIFIED:
   A. ALL CORNERS MUST BE .005 TO .015R OR CHAMFER.
   B. MUST BE FREE FROM BURRS AND SHARP EDGES.
   C. SURFACE ROUGHNESS SHALL NOT EXCEED 63√.

4. IDENTIFY USING DRAWING NUMBER AND REVISION LETTER PER MIL-STD-130 (ES-267).

5. FINISH: MIL-F-14072 (SIG. C) FIN E300 (PASSIVATE ES-585).

REVISIONS					
SYM	ZONE	DESCRIPTION	CHG NO.	DATE	APPD.
A3	C-8 B-7	(A) DIA WAS .218 .230 (A) THREAD WAS 1/4-20 NC-2B	D0555359	5 NOV 63	K CAP

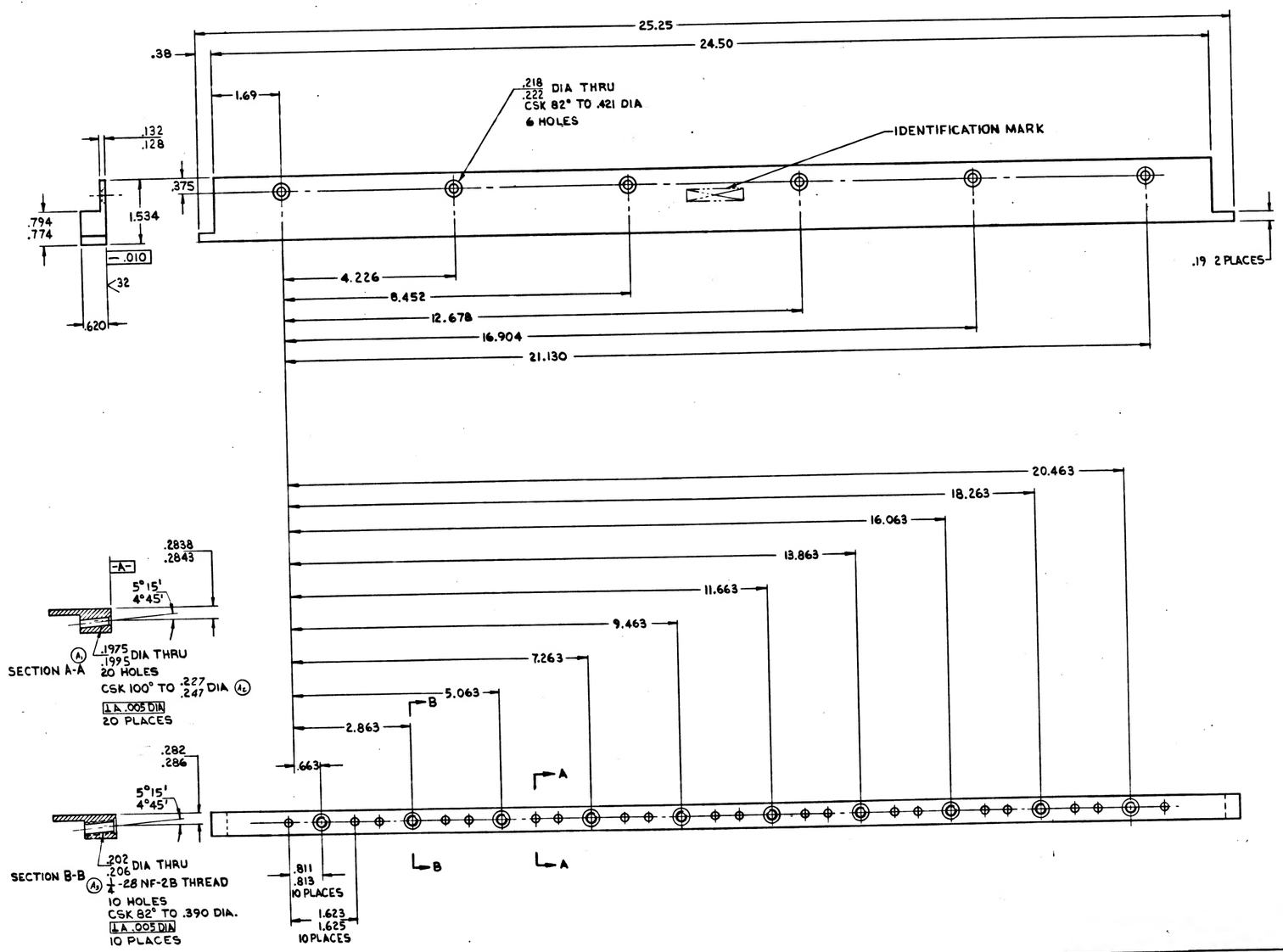

FOR INFORMATION ONLY

CLASS B RELEASE TDR No. 05658 DATE 1/7/64

1900952-011	1900009-011	UNLESS OTHERWISE SPECIFIED DIMENSIONS ARE IN INCHES TOLERANCES ON	AC SPARK PLUG DIVISION, GMC MILWAUKEE, WISCONSIN	MANNED SPACECRAFT CENTER HOUSTON, TEXAS
NEXT ASSY	USED ON	FRACTIONS ± .005 DECIMALS ± .005 ANGLES ±0°30'	ACSP PN DRAWN 17 OCT 63 DATE	CAP, TOE, AGE TRANSPORTATION CART
APPLICATION		DO NOT SCALE THIS DRAWING	CHECKED 31 OCT 63 APPROVAL 31 OCT 63 APPROVAL 1/3/64	
		MATERIAL SEE NOTE 2	NASA APPROVAL MIT APPROVAL	CODE IDENT NO. SIZE E 1900945
		CONTRACT NAS9-497		SCALE FULL SHEET 1 OF 1

INCHES 0 1 2 PHOTOGRAPHIC SCALE ONLY

NOTES:

1. INTERPRET DRAWING IN ACCORDANCE WITH STANDARDS PRESCRIBED BY MIL-D-70327.
2. MATERIAL: STAINLESS STEEL QQ-S-763, CLASS 416 COND A (ES-374 SST)
3. UNLESS OTHERWISE SPECIFIED:
   A. ALL CORNERS MUST BE .005 TO .015R OR CHAMFER.
   B. MUST BE FROM BURRS AND SHARP EDGES.
   C. SURFACE ROUGHNESS SHALL NOT EXCEED 63 μ.
4. IDENTIFY USING DRAWING NUMBER AND REVISION LETTER PER MIL-STD-130 (ES-267).
5. FINISH: MIL-F-14072 (SIG. C) FIN E300 (PASSIVATE ES-585).

REVISIONS

SYM	ZONE	DESCRIPTION	CHG NO.	DATE	APPD
A3	C-8 B-7	(A) DIA WAS .218 .222 (A) CSK WAS .218 DIA (A) THREAD WAS 1/4-20 NC-2B	D055359	8 NOV 63	J.K. CTP
B		CHANGE IN ACCORDANCE WITH CM 193762, PER TDRR 09263		21 JAN 64	CTP

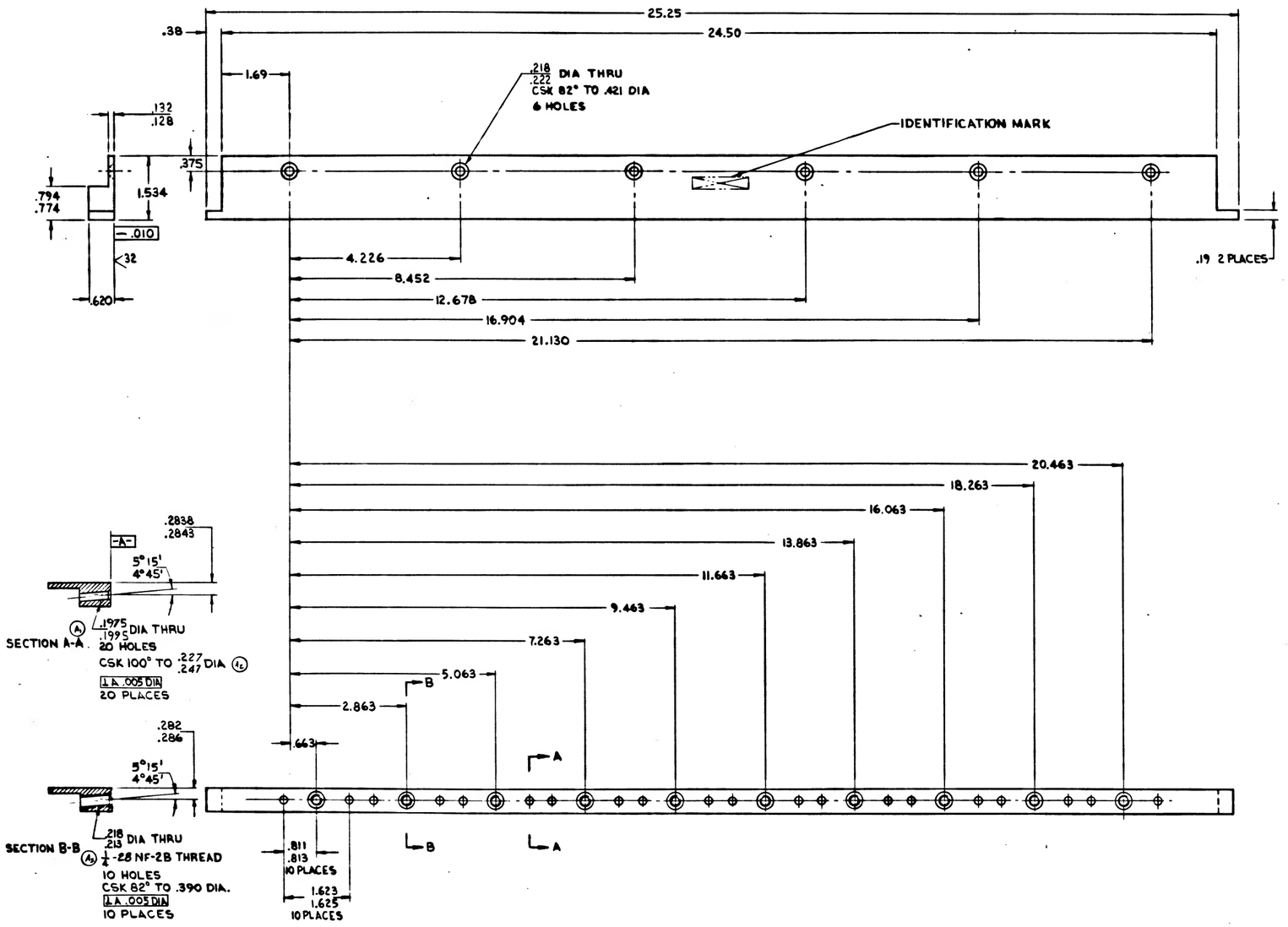

FOR INFORMATION ONLY

CLASS B RELEASE TDR No. 0565B DATE 1/1/69

1900952-011	1900009-011	UNLESS OTHERWISE SPECIFIED DIMENSIONS ARE IN INCHES TOLERANCES ON	AC SPARK PLUG DIVISION, GMC MILWAUKEE, WISCONSIN
NEXT ASSY	USED ON	FRACTIONS ± — ; DECIMALS ± .005 ± .02 ; ANGLES ±0°30' -0°30'	ACSP PN
APPLICATION		DO NOT SCALE THIS DRAWING	DRAWN 17 OCT 63 DATE; CHECKED Ed Foster 31 OCT 63; APPROVED W. Waters 31 OCT 63; APPROVAL J. Johnson 1/3/64
		MATERIAL SEE NOTE 2	NASA APPROVAL; MIT APPROVAL
		CONTRACT NAS9-497	

MANNED SPACECRAFT CENTER HOUSTON, TEXAS

CAP, TOE, AGE TRANSPORTATION CART

CODE IDENT NO. | SIZE E | 1900945

SCALE FULL | SHEET 1 OF 1

1900945

1900942

REVISIONS					
SYM	ZONE	DESCRIPTION	CHG. NO.	DATE	APPD.
A,		(A) REVISED HOLE LOCATION	D.O.55359	8 Nov 63	J.K. / CAP

NOTES:

1. INTERPRET DRAWING IN ACCORDANCE WITH STANDARDS PRESCRIBED BY MIL-D-70327.
2. MATERIAL: STAINLESS STEEL, QQ-S-763, CLASS 302 OR 304, COND. A, HF (ES-376).
3. UNLESS OTHERWISE SPECIFIED:
   A. ALL CORNERS MUST BE .005 TO .015 R OR CHAMFER.
   B. MUST BE FREE FROM BURRS AND SHARP EDGES.
   C. SURFACE ROUGHNESS MUST NOT EXCEED 63√.
4. IDENTIFY USING DRAWING NUMBER AND REVISION LETTER PER MIL-STD-130 (ES-267).
5. FINISH: MIL-F-14072 (SIG. C) FIN E300 (PASSIVATE ES-585).

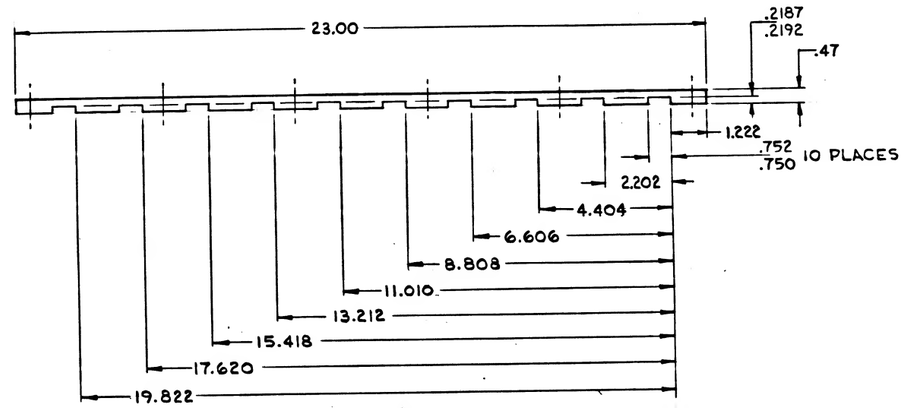

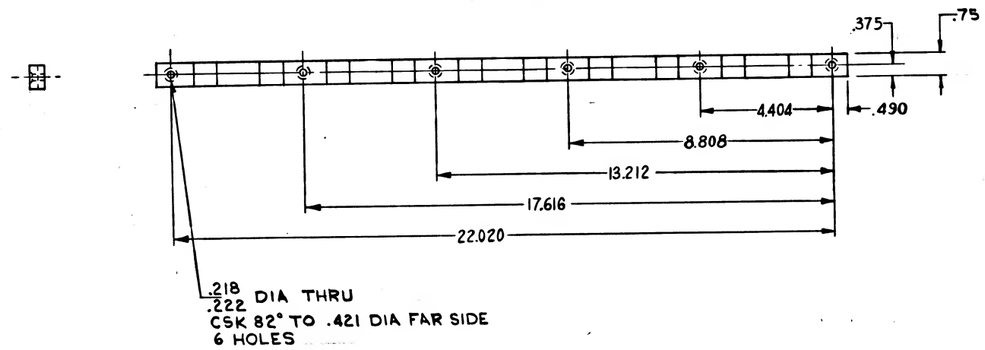

FOR INFORMATION ONLY

CLASS B RELEASE TDR No. 05658 DATE 1/7/64

1900952-011	1900009-011	UNLESS OTHERWISE SPECIFIED DIMENSIONS ARE IN INCHES TOLERANCES ON FRACTIONS ± — DECIMALS ±.005 ANGLES ±2° ± — ±.02 ±2°	AC SPARK PLUG DIVISION, GMC MILWAUKEE, WISCONSIN	MANNED SPACECRAFT CENTER HOUSTON, TEXAS
NEXT ASSY	USED ON	DO NOT SCALE THIS DRAWING	ACSP PN DRAWN RCJ 18 OCT 63 CHECKED C. Foster 31 OCT 63 APPROVED W. Winberg 31 OCT 63 APPROVAL G. Gedeman 11/3/63	RETAINER, TANG
APPLICATION		MATERIAL SEE NOTE 2	NASA APPROVAL	CODE IDENT NO. / SIZE D / 1900946
		CONTRACT NAS9-497	MIT APPROVAL W. Kaplan 7 Jan 64	SCALE 1:2 / SHEET 1 OF 1

MIL 10770-P

INCHES 0 1 2 PHOTOGRAPHIC SCALE ONLY

1900948

REVISIONS				
SYM	ZONE	DESCRIPTION	DATE	APPD.
		CHG NO.		

NOTES:

1. INTERPRET DRAWING IN ACCORDANCE WITH STANDARDS PRESCRIBED BY MIL-D-70327.
2. MATERIAL: STAINLESS STEEL QQ-S-763, CLASS 303 OR 303 Se COND A, CF (ES-380).
3. MUST BE FREE FROM BURRS & SHARP EDGES.
4. UNLESS OTHERWISE SPECIFIED:
   A. MACHINED CORNERS MUST BE .005 TO .015 R OR CHAMFER.
   B. SURFACE ROUGHNESS OF MACHINED SURFACES MUST NOT EXCEED 63√.
5. FINISH: PASSIVATE PER MIL-F-14072 (SIG C) FINISH E-300 (ES-585).
6. IDENTIFY USING DRAWING NUMBER AND REVISION LETTER PER MIL-STD-130 (ES-267).

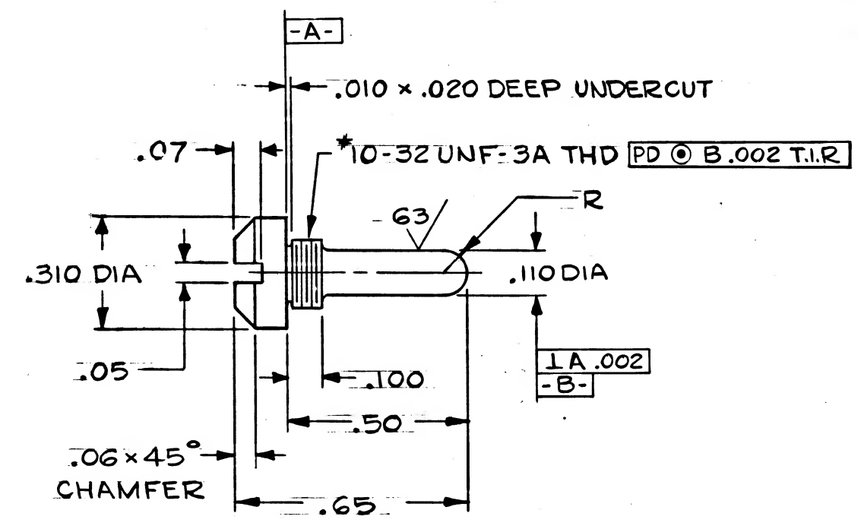

FOR INFORMATION ONLY

CLASS B RELEASE TDR No. 04584 DATE 11/12/63

1900894	1900268
NEXT ASSY	USED ON
APPLICATION	

UNLESS OTHERWISE SPECIFIED
DIMENSIONS ARE IN INCHES
TOLERANCES ON

FRACTIONS	DECIMALS	ANGLES
+ −	±.005	+2°
− −	±.02	−2°

DO NOT SCALE THIS DRAWING

MATERIAL: SEE NOTE 2

CONTRACT NAS 9-497

AC SPARK PLUG DIVISION, GMC
MILWAUKEE, WISCONSIN

ACSP PN

DRAWN 24 OCT 63
CHECKED 29 OCT 63
APPROVAL 30 OCT 63
APPROVAL 11/12/63
NASA APPROVAL
MIT APPROVAL 12 Nov 63

MANNED SPACECRAFT CENTER
HOUSTON, TEXAS

GUIDE PIN, GSE-PSA JUNCTION BOX

CODE IDENT NO. | SIZE C | 1900948

SCALE 4:1 | SHEET 1 OF 1

MIL 1077C-P

INCHES 0 1 2
PHOTOGRAPHIC SCALE ONLY

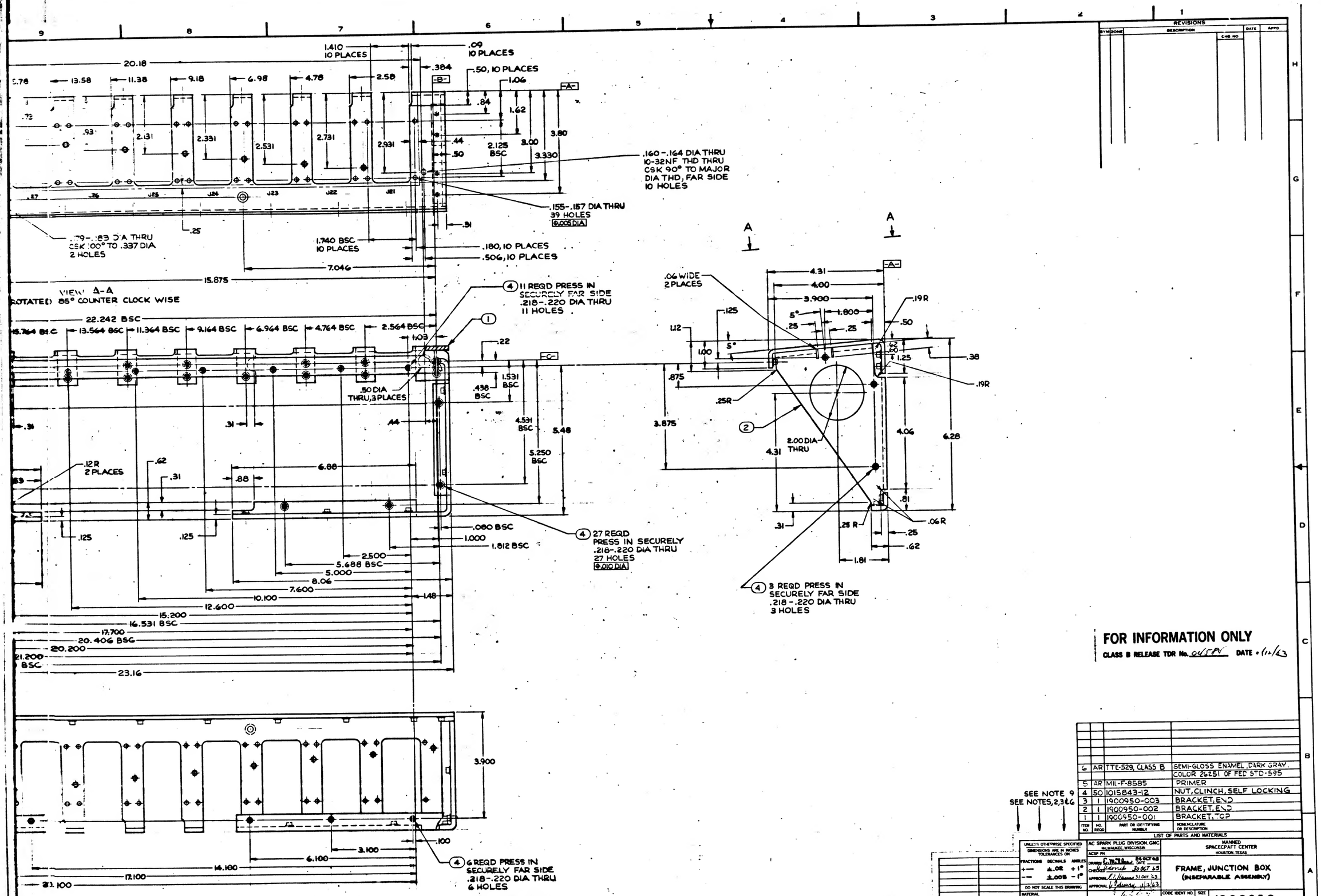

REVISIONS

SYM	ZONE	DESCRIPTION	CHG NO	DATE	APPD

FOR INFORMATION ONLY

CLASS B RELEASE TDR No. 04589 DATE 1/12/63

SEE NOTE 9
SEE NOTES, 2, 3 & 6

ITEM NO.	NO. REQD	PART OR IDENTIFYING NUMBER	NOMENCLATURE OR DESCRIPTION
6	AR	TTE-529, CLASS B	SEMI-GLOSS ENAMEL, DARK GRAY. COLOR 26251 OF FED STD-595
5	AR	MIL-F-8585	PRIMER
4	50	1015843-12	NUT, CLINCH, SELF LOCKING
3	1	1900950-003	BRACKET, END
2	1	1900950-002	BRACKET, END
1	1	1900950-001	BRACKET, TOP

LIST OF PARTS AND MATERIALS

NEXT ASSY	USED ON
1900894-011	1900868-011

APPLICATION

UNLESS OTHERWISE SPECIFIED DIMENSIONS ARE IN INCHES TOLERANCES ON

FRACTIONS	DECIMALS	ANGLES
+—	±.02	+1°
——	±.005	−1°

DO NOT SCALE THIS DRAWING

MATERIAL ——

CONTRACT NAS9-497

AC SPARK PLUG DIVISION, GMC
MILWAUKEE, WISCONSIN

ACSP PN

DRAWN G. Mathews 26 OCT 62
CHECKED [illegible] 30 OCT 62
APPROVAL [illegible] 31 OCT 62
APPROVAL [illegible] 1/12/63
NASA APPROVAL [illegible] 1/12/63
MIT APPROVAL [illegible]

MANNED
SPACECRAFT CENTER
HOUSTON, TEXAS

FRAME, JUNCTION BOX
(INSEPARABLE ASSEMBLY)

CODE IDENT NO. | SIZE | 1900950

SCALE FULL | SHEET 1 OF 1

1900950

INCHES
PHOTOGRAPHIC SCALE ONLY

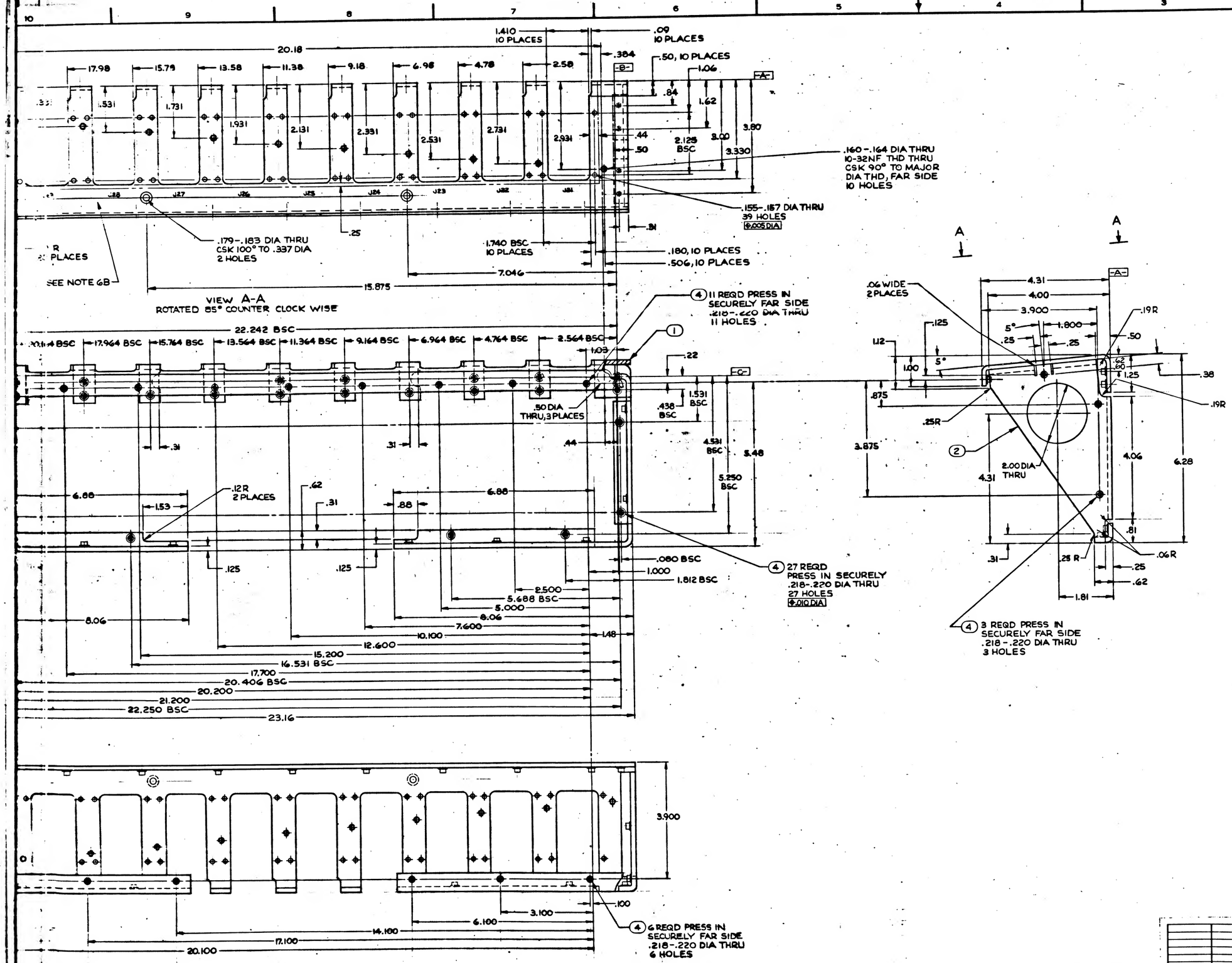

REVISIONS				
SYM	ZONE	DESCRIPTION	CHG NO	DATE

FOR INFORMATION ONLY

CLASS B RELEASE TDR No. 04 5 PV DATE 1/11/63

SEE NOTE 9
SEE NOTES, 2, 3 & 6

ITEM NO.	NO. REQD	PART OR IDENTIFYING NUMBER	NOMENCLATURE OR DESCRIPTION
6	AR	TTE-529, CLASS B	SEMI-GLOSS ENAMEL, DAR K GRAY, COLOR 26251 OF FED STD-595
5	AR	MIL-F-8555	PRIMER
4	50	0 5843-2	NUT, CLINCH, SELF LOCKING
3	1	900950-003	BRACKET-END
2	1	900950-002	BRACKET-END
1		900950-00	BRACKET-CO

LIST OF PARTS AND MATERIALS

1900894-011	1900268-011
NEXT ASSY	USED ON
APPLICATION	

UNLESS OTHERWISE SPECIFIED DIMENSIONS ARE IN INCHES TOLERANCES ON

FRACTIONS	DECIMALS	ANGLES
+ —	±.02	+ 1°
— —	±.005	− 1°

DO NOT SCALE THIS DRAWING

MATERIAL ——

CONTRACT NAS9-497

AC SPARK PLUG DIVISION, GMC
MILWAUKEE, WISCONSIN

ACSP PN

DRAWN C. Mathes 26 OCT 62 DATE
CHECKED [illegible] 30 OCT 62
APPROVAL [illegible] 31 OCT 62
APPROVAL [illegible] 1 NOV 62
NASA APPROVAL [illegible] 1/11/63
MIT APPROVAL [illegible]

MANNED
SPACECRAFT CENTER
HOUSTON, TEXAS

FRAME, JUNCTION BOX
(INSEPARABLE ASSEMBLY)

CODE IDENT NO. | SIZE | 1900950

SCALE FULL | SHEET 1 OF 1

1900950

INCHES
0 1 2
PHOTOGRAPHIC SCALE ONLY

NOTES:

1. INTERPRET DRAWING IN accordance WITH STANDARDS PRESCRIBED BY MIL-D-70327.
2. MATERIAL: ALUMINUM ALLOY QQ-A-355, TEMPER O (ES-2104, 2024).
3. HEAT TREATMENT PER MIL-H-6088 TO TEMPER T6 (ES-2010).
4. MUST BE FREE FROM BURRS AND SHARP EDGES.
5. SPOTWELD PER MIL-W-6858, CLASS B, GROUP A (ES-2512).
6. FINISH: A. CHEMICAL FILM PER MIL-C-5541 (ES-591)
   B. APPLY ITEM (5) AND (2) COATS OF ITEM (6) TO INDICATED AREA.
7. IDENTIFY USING DRAWING NUMBER AND REVISION LETTER PER MIL-STD-130 (ES-267).
8. MARK CHARACTERS, PER ND1002019, .12 HIGH, COLOR WHITE, CENTRALIZE AS SHOWN.
9. VENDOR ITEM: SEE SPECIFICATION CONTROL DRAWING.

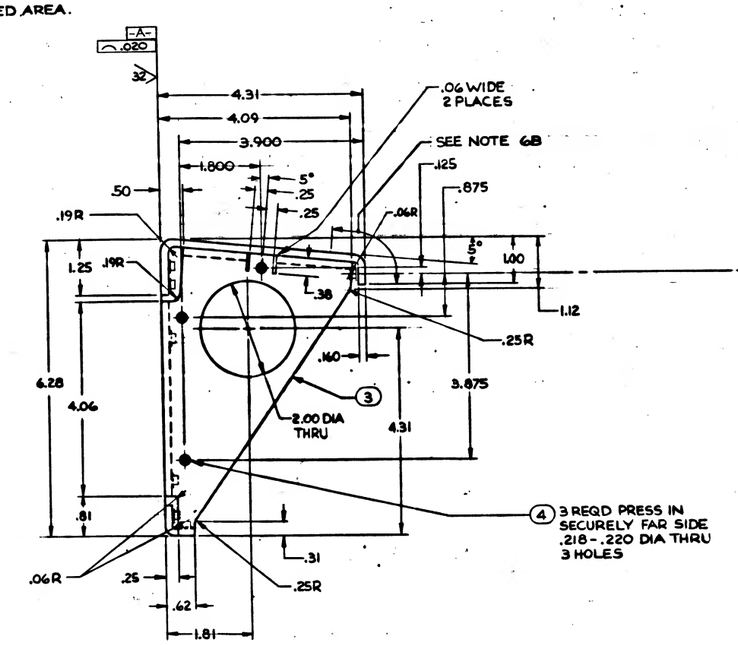

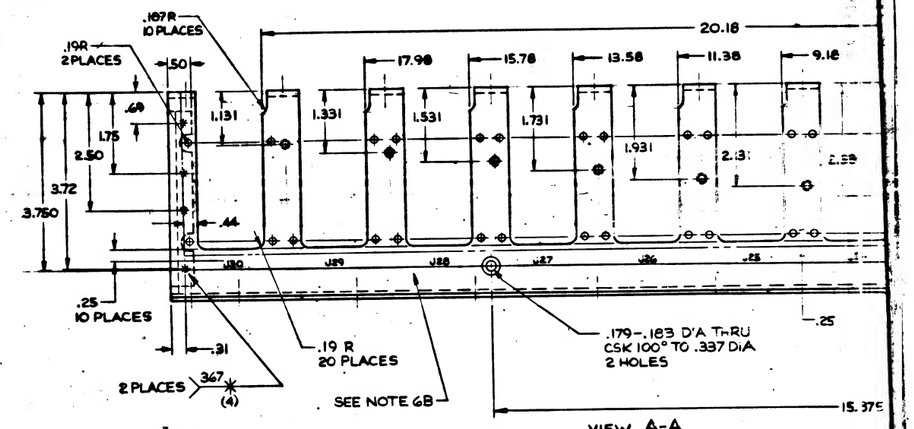

VIEW A-A
ROTATED 85° COUNTER CLOCK WISE

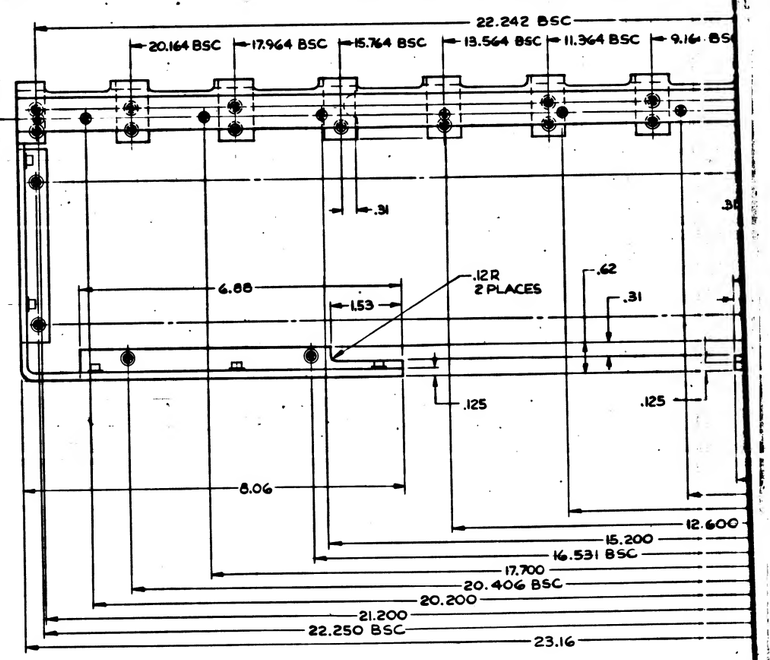

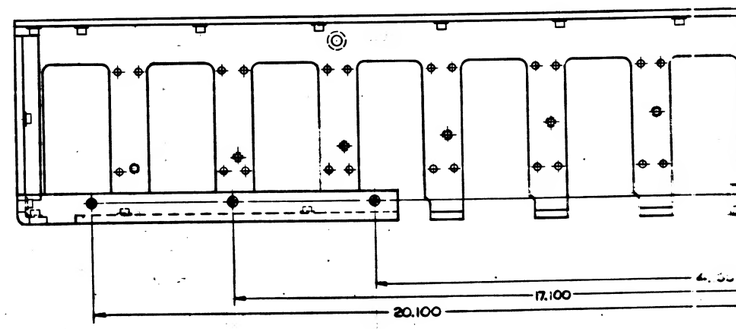

1900950

NOTES :

1. INTERPRET DRAWING IN ACCORDANCE WITH STANDARDS PRESCRIBED BY MIL-D-70327.
2. MATERIAL : ALUMINUM ALLOY QQ-A-355 TEMPER T4 (ES-2104 TYPE 2024-T4)
3. MUST BE FREE FROM BURRS & SHARP EDGES.
4. UNLESS OTHERWISE SPECIFIED :
   A. MACHINED CORNERS MUST BE .005 TO .015 R OR CHAMFER.
   B. SURFACE ROUGHNESS OF MACHINED SURFACES MUST NOT EXCEED 125 √.
5. FINISH :
   A. CHEMICAL FILM PER MIL-C-5541 (ES-591).
   B. APPLY ITEM (4) AND TWO COATS OF (5) TO EDGE.
6. IDENTIFY USING DRAWING NUMBER & REVISION LETTER PER MIL-STD-130 (ES-267).
7. VENDOR ITEM - SEE SPECIFICATION CONTROL DRAWING.

REVISIONS

SYM	ZONE	DESCRIPTION	CHG NO.	DATE	APPD.

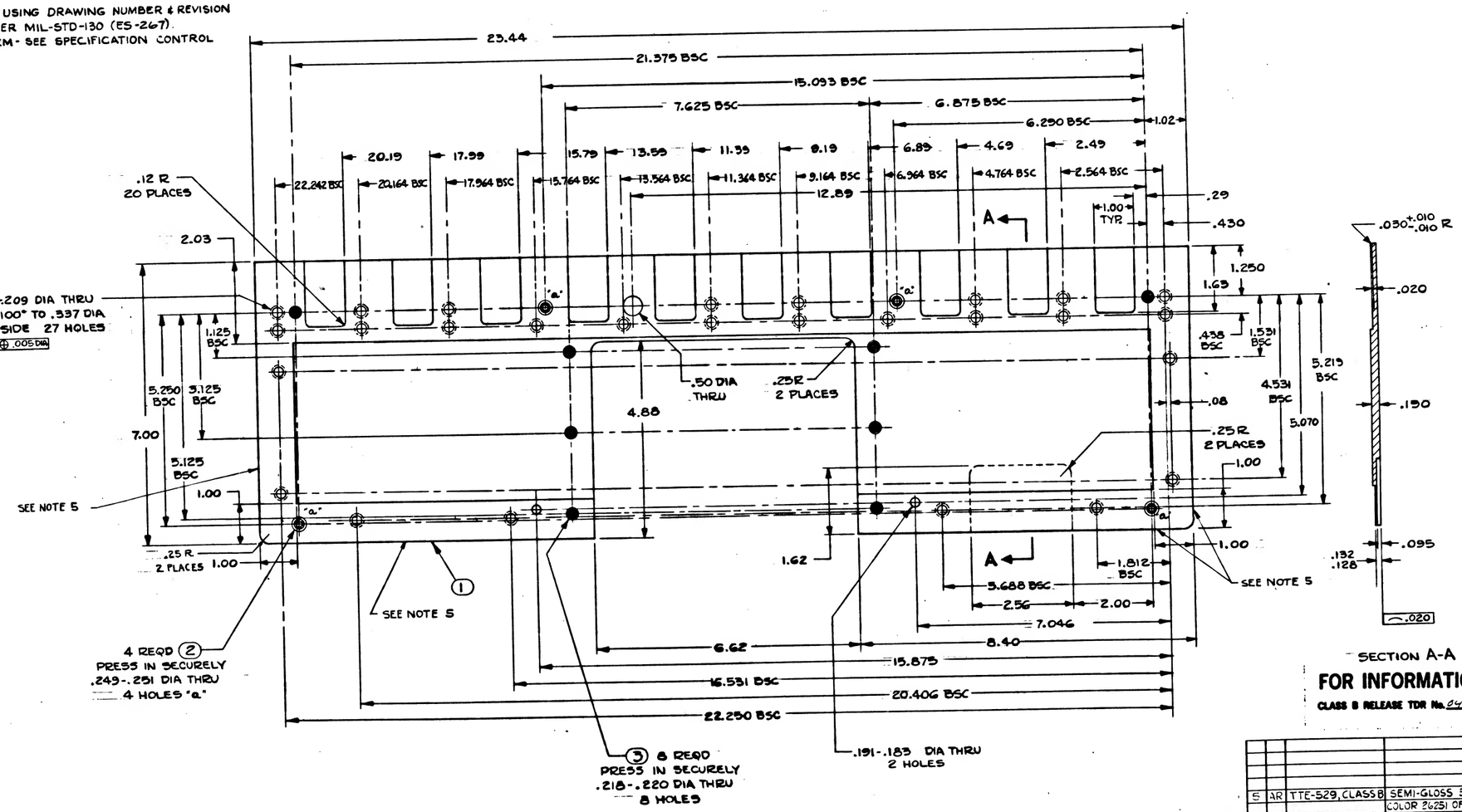

FOR INFORMATION ONLY

CLASS B RELEASE TDR No. 04554 DATE 11/1/63

ITEM NO.	NO. REQD	PART OR IDENTIFYING NUMBER	NOMENCLATURE OR DESCRIPTION
5	AR	TTE-529, CLASS B	SEMI-GLOSS ENAMEL, DARK GRAY, COLOR 26251 OF FED STD-595
4	AR	MIL-P-8585	PRIMER
3	8	1015843-12	NUT, CLINCH SELF-LOCKING
2	4	1015843-11	NUT, CLINCH, SELF-LOCKING
1	1	1900951-001	BACKPLATE - SEE NOTE 2

SEE NOTE 7
SEE NOTE 7

LIST OF PARTS AND MATERIALS

1900894	1900268-011
NEXT ASSY	USED ON
APPLICATION	

UNLESS OTHERWISE SPECIFIED DIMENSIONS ARE IN INCHES TOLERANCES ON FRACTIONS ± DECIMALS ±.02 ANGLES ±.005 DO NOT SCALE THIS DRAWING

MATERIAL

CONTRACT NAS 9-497

AC SPARK PLUG DIVISION, GMC MILWAUKEE, WISCONSIN

ACSP PN

DRAWN 21 OCT 63 DATE

CHECKED 24 Oct 63

APPROVAL 31 Aug 63

APPROVAL 1/8/63

NASA APPROVAL

MIT APPROVAL

MANNED SPACECRAFT CENTER HOUSTON, TEXAS

BACKPLATE, JUNCTION BOX FRAME

CODE IDENT NO. SIZE E 1900951

SCALE FULL SHEET 1 OF 1

INCHES 0 1 2 PHOTOGRAPHIC SCALE ONLY

1900954 A

REVISIONS					
SYM	ZONE	DESCRIPTION	CHG NO.	DATE	APPD.
A		REPLACED WITH CHANGE BY REV. B PER MXC 192478 PER TDRR 05740		20 DEC 63 / 1/14/64	WSM / MW / DW

PICTURE INCOMPLETE. DRAWING INFORMATION WILL FOLLOW WHEN AVAILABLE.

(A) REPLACED WITH CHANGE BY REV B

FOR INFORMATION ONLY

CLASS B RELEASE TDR No. 047074 DATE 11/19/63

ITEM NO.	NO. REQD	PART OR IDENTIFYING NUMBER	NOMENCLATURE OR DESCRIPTION
10	1	-16	
9	1	-12	
8	1	-10	
7	1	-8	
6	1	AN3420-6	BUSHING, TELESCOPING
5	1	1016237-320	CLAMP, STRAIN RELIEF
4	1	ND1002181	WIRE, TYPE I, CLASS 1, WHITE #20 AWG - 135 FT LG
3	1	1016197-007	TUBING, SHRINK, FLEXIBLE, MODIFIED PVC - 16 FT LG
2	1	MS3126F-18-32SX	CONNECTOR, PLUG (1897092-322)
1	1	MS3106R-32-8P	CONNECTOR, PLUG (1897106-80)

LIST OF PARTS AND MATERIALS

NEXT ASSY	USED ON
1900011-011	1900011-011

APPLICATION

UNLESS OTHERWISE SPECIFIED DIMENSIONS ARE IN INCHES TOLERANCES ON FRACTIONS ± DECIMALS ± ANGLES ±

DO NOT SCALE THIS DRAWING

MATERIAL

CONTRACT NAS9-497

AC SPARK PLUG DIVISION, GMC
MILWAUKEE, WISCONSIN

ACSP PN

DRAWN C. LENZ DATE 22 OCT 63
CHECKED J. L. Mitton
APPROVAL R. Blank 10-24-63
APPROVAL L. Gelman 11/15/63
NASA APPROVAL
MIT APPROVAL D. Kahyl 11/19/63

MANNED SPACECRAFT CENTER
HOUSTON, TEXAS

CABLE, ELECTRICAL, INTERCONNECT-W101 (BPP TO IMU)

CODE IDENT NO. | SIZE C | 1900954

SCALE — | SHEET 1 OF 1

MIL 1077C—P

PENNANT GENERAL NOTES

NOTE

1 SEE CONDUCTOR CHART

2 SEE CONDUCTOR CHART

3 INTERPRET DRAWING IN ACCORDANCE WITH STANDARDS PRESCRIBED BY MIL-D-70327.

4 MARK CONDUCTOR IDENTIFICATION ON SINGLE CONDUCTORS PER ND1002019 OMITTING ALL SUFFIX LETTERS EXCEPT A AND B.

5 SPACING OF CONDUCTOR IDENTIFICATION SHALL BE EVERY 15 INCHES MAX. AND AT EACH TERMINATION.

6 SPIRALLING OF THE MARKING IS ALLOWED.

7 IDENTIFY USING DRAWING NO. AND REVISION LETTER PER MIL-STD-130 (ES-267). .25 INCH HIGH CHARACTERS WHITE. HOT IMPRESSION STAMPING PER ND1002019.

8 Y OR N IN TINNED COLUMN INDICATES YES OR NO.

9 A LETTER WITH AN ASTERISK SUFFIX INDICATES A LOWER CASE LETTER.

10 VENDOR ITEM - SEE SPECIFICATION CONTROL DRAWING.

11 MARK SLEEVING WITH REFERENCE DESIGNATION AS SHOWN .12 INCH HIGH, COLOR WHITE PER ND1002019.

12 ASSEMBLE CONTACTS IN ALL CONNECTOR GROMMET HOLES.

13 SOLDER PER MIL-STD-440 USING ITEMS 11 AND 12.

PENNANT GENERAL NOTES

NOTE

TOLERANCE CHART, UNLESS OTHERWISE SPECIFIED ---

APPLICABLE LENGTH FOR WIRE OR CABLE, STRIP WIRE, STRIP JACKET, CUT WIRE OR CUT SHIELD.	TOLERANCE				
	WIRE OR CABLE	STRIP WIRE	STRIP JACKET	CUT WIRE	CUT SHIELD
UNDER 1 INCH	+ .06-.00	+.03-.00	+.06-.06	+.06-.06	+.06-.06
1 INCH TO 6 INCHES	+ .50-.00	+.06-.00	+.25-.25	+.25-.25	+.25-.25
6 INCHES TO 6 FEET	+1.00-.00		+.50-.50	+.50-.50	+.50-.50
OVER 6 FEET	+2.00-.00				

REVISIONS

SYM	DESCRIPTION	DATE	APPROVAL
B	REPLACES REV. A WITH CHANGE PER MXC 192478 REVISED PER TDR 057990	22 Dec 63 / 1/14/64	

APPLICATION

NEXT ASS'Y	USED ON
1900011-011	1900011-011

FOR INFORMATION ONLY

CLASS B RELEASE TDR No._____ DATE

(B) REPLACES REV A WITH CHANGE

REV	B	B	B	B
SHEET	1	2	3	4	5	6

REV STATUS
OF SHEETS

MANNED SPACECRAFT CENTER HOUSTON, TEXAS

AC SPARK PLUG DIVISION, GMC MILWAUKEE, WISCONSIN

ACSP PN

DRAWN 1 Nov 63 DATE
CHECKED 12 Nov 63
APPROVAL
APPROVAL
NASA APPROVAL
MIT APPROVAL
CONTRACT NAS 9-497

CABLE INTERCONNECT W101
BPP TO IMU

CODE IDENT NO. | SIZE A | 1900954 | REV B

SCALE - | SHEET 1 OF 6

PENNANT LIST OF MATERIALS

NOTE	ITEM	QTY	PART NO	DESCRIPTION
	1	AR	1900954-001	WIRE ND1002181 TYPE 1, CLASS 1, 20AWG, WHT. 135 FT. TOTAL LENGTH
	2	AR	1900954-002	TUBING, MODIFIED PVC SHRINK FIT PER 1016197-007 17 FT. TOTAL LENGTH
13	3	1	MS3106R32-8P	(1897106-080) CONNECTOR-PLUG
12	4	1	MS3126F18-32SX	(1897092-322) CONNECTOR-PLUG
10	5	1	1016237-320	CLAMP-STRAIN RELIEF
	6	1	AN3420- 6	BUSHING-CABLE ADAPTOR, TELESCOPING
	7	1	AN3420- 8	BUSHING-CABLE ADAPTOR, TELESCOPING
	8	1	AN3420- 10	BUSHING-CABLE ADAPTOR, TELESCOPING
	9	1	AN3420- 12	BUSHING-CABLE ADAPTOR, TELESCOPING
	10	1	AN3420- 16	BUSHING-CABLE ADAPTOR, TELESCOPING
	11	AR	QQ-S-571	FLUX TYPE AR (ES-2175 TYPE 1 OR 2) OR MIL-F-14256 FLUX (ES-2798)
	12	AR	QQ-S-571	SOLDER SN60 (ES-2175 ALLOY 1)

GIG CABLE W101 B 1900954

CONDUCTOR INDIVIDUAL LENGTH NUMBER	ITEM NO.	2	FROM CUT WIRE OR SHIELD STRIP WIRE OR JACKET CIRCUIT POINT	2	T I N	2	TERMINATION SPEC. 1 ITEM NO.	NO.	TO CUT WIRE OR SHIELD STRIP WIRE OR JACKET CIRCUIT POINT	2	T I N	2	TERMINATION SPEC 1 ITEM NO.	NO.
A 1	1		P1-C	30	Y				P2-A*	22	N			
A 2	1		P1-B	30	Y				P2-L	22	N			
A 3	1		P1-A	30	Y				P2-M	22	N			
A 4	1		P1-D	30	Y				P2-Z	22	N			
A 5	1		P1-A*	30	Y				P2-K	22	N			
A 6	1		P1-X	30	Y				P2-X	22	N			
A 7	1		P1-W	30	Y				P2-R	22	N			
A 8	1		P1-J	30	Y				P2-V	22	N			
A 9	1		P1-I	30	Y				P2-W	22	N			

1 THE STD CONDUCTOR TERMINATION FIGURES ARE PER

2 DIMENSIONS ARE IN INCHES AND TWO PLACE DECIMALS.

MANNED SPACECRAFT CENTER HOUSTON, TEXAS | SIZE A | 1900954

SCALE - NONE | REV LTR B | SHEET 5 OF 6

MIL 2085 - 4-63 WIR

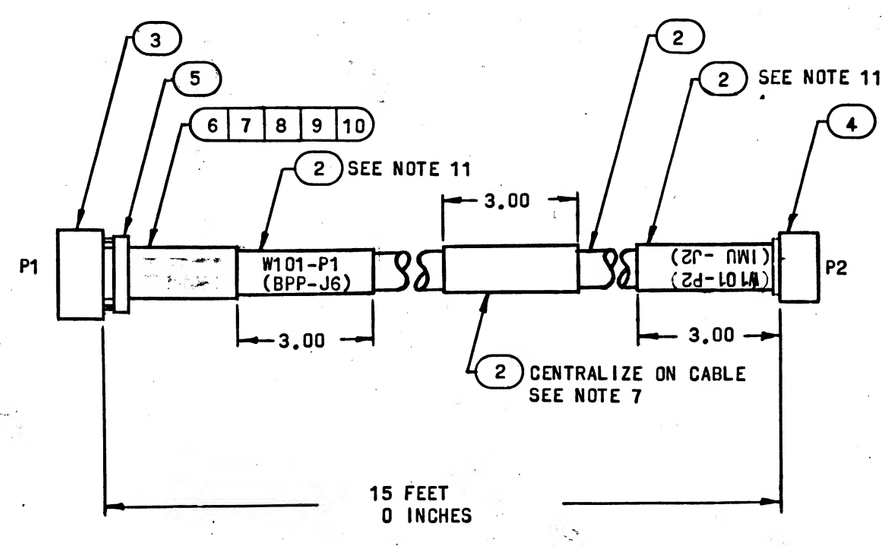

LOCATION TOLERANCE
(EXCEPT LENGTH):
+.50
-.50

MANNED SPACECRAFT CENTER HOUSTON, TEXAS | SIZE A | 1900954

SCALE - NONE | REV LTR B | SHEET 6 OF 6

MIL 2084 4-63

1900954

REVISIONS					
SYM	ZONE	DESCRIPTION	CHG NO.	DATE	APPD.

PICTURE INCOMPLETE. DRAWING INFORMATION WILL FOLLOW WHEN AVAILABLE.

FOR INFORMATION ONLY

CLASS B RELEASE TDR No. 04707 DATE 11/19/63

ITEM NO.	NO. REQD	PART OR IDENTIFYING NUMBER	NOMENCLATURE OR DESCRIPTION
10	1	-16	
9	1	-12	
8	1	-10	
7	1	-8	
6	1	AN3420-6	BUSHING, TELESCOPING
5	1	1016237-320	CLAMP, STRAIN RELIEF
4	1	ND1002181	WIRE, TYPE I, CLASS 1, WHITE #20 AWG - 135 FT LG
3	1	1016197-007	TUBING, SHRINK, FLEXIBLE, MODIFIED PVC - 16 FT LG
2	1	MS3126F-18-32SX	CONNECTOR, PLUG (1897092-322)
1	1	MS3106R-32-8P	CONNECTOR, PLUG (1897106-80)

LIST OF PARTS AND MATERIALS

NEXT ASSY	USED ON
1900011-011	1900011-011

APPLICATION

UNLESS OTHERWISE SPECIFIED
DIMENSIONS ARE IN INCHES
TOLERANCES ON

FRACTIONS	DECIMALS	ANGLES
+ −	+ −	+ −
− −	− −	− −

DO NOT SCALE THIS DRAWING

MATERIAL

CONTRACT NAS9-497

AC SPARK PLUG DIVISION, GMC
MILWAUKEE, WISCONSIN

ACSP PN

DRAWN C. LENZ DATE 22 OCT 63
CHECKED J. L. Mitton
APPROVAL R. Pluck 10-24-63
APPROVAL L. Gelman 11/8/63
NASA APPROVAL
MIT APPROVAL D. Hazel 11/19/63

MANNED SPACECRAFT CENTER
HOUSTON, TEXAS

CABLE, ELECTRICAL, INTERCONNECT-W101 (BPP TO IMU)

CODE IDENT NO.
SIZE C
1900954
SCALE —
SHEET 1 OF 1

MIL 1077C—P

INCHES 0 1 2
PHOTOGRAPHIC SCALE ONLY

1900955

REVISIONS					
SYM	ZONE	DESCRIPTION	CHG NO.	DATE	APPD.
A1		(1) REPLACED WITH CHANGE BY REV. B PER TDRR 08946	MXC 192479	6 MARCH 64	CJK / MEM

PICTURE INCOMPLETE. DRAWING INFORMATION WILL FOLLOW WHEN AVAILABLE.

FOR INFORMATION ONLY

CLASS B RELEASE TDR No. 047044 DATE 11/19/63

(A) REPLACED WITH CHANGE BY REV (B)

ITEM NO.	NO. REQD	PART OR IDENTIFYING NUMBER	NOMENCLATURE OR DESCRIPTION
8	1	1016183-001	TRANSITION, 3-FINGER
7	1	1016197-006	TUBING, SHRINK, FLEXIBLE, MODIFIED PVC-4 FT LG
6	1	1016197-007	TUBING, SHRINK, FLEXIBLE, MODIFIED PVC-8 FT LG
5	1	ND1002181	WIRE, TYPE I, CLASS 1, WHITE, #20 AWG-120 FT LG
4	1	1016134-81	
3	1	MS3126F-14-19P	(1897089-190)
2	1	MS3126F-12-10PW	(1897038-101)
1	1	MS3126F-12-3SY	CONNECTOR, PLUG (1897039-33)

LIST OF PARTS AND MATERIALS

NEXT ASSY	USED ON
1900011-011	1900011-011

APPLICATION

UNLESS OTHERWISE SPECIFIED DIMENSIONS ARE IN INCHES TOLERANCES ON

FRACTIONS	DECIMALS	ANGLES
+ −	+ −	+ −
− −	− −	− −

DO NOT SCALE THIS DRAWING

MATERIAL

CONTRACT NAS9-497

AC SPARK PLUG DIVISION, GMC
MILWAUKEE, WISCONSIN

ACSP PN

DRAWN C. LENZ DATE 22 OCT 63
CHECKED J. L. Mitchell
APPROVAL R. Blinch 10-29-63
APPROVAL C. Gehrman 11/5/63
NASA APPROVAL J. Barnard
MIT APPROVAL D. Hagl 11/19/63

MANNED SPACECRAFT CENTER
HOUSTON, TEXAS

CABLE, ELECTRICAL, INTERCONNECT-W100 (BPP TO PTC)

CODE IDENT NO. | SIZE C | 1900955

SCALE — | SHEET 1 OF 1

MIL 1077C-P

PENNANT NOTE — GENERAL NOTES

1. SEE CONDUCTOR CHART. PENNANT NOTE 1.
2. SEE CONDUCTOR CHART. PENNANT NOTE 2.
3. INTERPRET DRAWING IN ACCORDANCE WITH STANDARDS PRESCRIBED BY MIL-D-70327.
4. MARK CONDUCTOR IDENTIFICATION ON SINGLE CONDUCTORS PER ND1002019 OMITTING ALL SUFFIX LETTERS EXCEPT A AND B.
5. SPACING OF CONDUCTOR IDENTIFICATION SHALL BE EVERY 15 INCHES MAX. AND AT EACH TERMINATION.
6. SPIRALLING OF THE MARKING IS ALLOWED.
7. IDENTIFY USING DRAWING NO. AND REVISION LETTER PER MIL-STD-130 (ES-267). .25 INCH HIGH CHARACTERS WHITE. HOT IMPRESSION STAMPING PER ND1002019.
8. Y OR N IN TINNED COLUMN INDICATES YES OR NO.
9. A LETTER WITH AN ASTERISK SUFFIX. INDICATES A LOWER CASE LETTER.
10. VENDOR ITEM - SEE SPECIFICATION CONTROL DRAWING.
11. MARK SLEEVING WITH REFERENCE DESIGNATION AS SHOWN .12 INCH HIGH. COLOR WHITE PER ND1002019. HOT IMPRESSION STAMP.
12. ASSEMBLY CONTACTS IN ALL CONNECTOR GROMMET HOLES.
13. SEE NOTES 10 AND 12

MANNED SPACECRAFT CENTER HOUSTON, TEXAS	SIZE A	1900955
SCALE - NONE	REV LTR C	SHEET 3 OF 7

MIL 2064 4-63

PENNANT NOTE — LIST OF MATERIALS

NOTE	ITEM	QTY	PART NO	DESCRIPTION
12	1	1	MS3126F12-10PW	(1897038-101) CONNECTOR PLUG
12	2	1	MS3126F14-19P	(1897089-190) CONNECTOR PLUG
13	3	1	1016134- 81	CONNECTOR PLUG
12	4	1	MS3126F12-35Y	(1897039-33) CONNECTOR PLUG
	5	1	1900955-001	WIRE ND1002181 TYPE 1, CLASS 1, 22AWG, WHT, 129 FEET TOTAL LENGTH
	6	1	1900955-002	WIRE ND1002181 TYPE 1, CLASS 1, 20AWG, WHT, 24 FT. 6 IN., TOTAL LENGTH
10	7	1	1016183-001	3 FINGER TRANSITION, HEAT SHRINKABLE
	8	1	1900955-003	(1016197-006) TUBING-MODIFIED PVC, FLEXIBLE, 4 FT. TOTAL LENGTH
	9	1	1900955-004	(1016197-007) TUBING-MODIFIED PVC, FLEXIBLE, 8 FT. 6 IN., TOTAL LENGTH
10	10	3	1016282-012	GROMMET, CONNECTOR STRAIN RELIEF
10	11	1	1016282-014	GROMMET, CONNECTOR STRAIN RELIEF

MANNED SPACECRAFT CENTER HOUSTON, TEXAS	SIZE A	1900955
SCALE - NONE	REV LTR C	SHEET 4 OF 7

MIL 2064 4-63

FOR INFORMATION ONLY

CLASS B RELEASE TDR No. 04704 DATE 11/9/63

APPLICATION			REVISIONS		
NEXT ASSY	USED ON	SYM	DESCRIPTION	DATE	APPROVAL
1900011-011	1900011-011	B2	(1) REPLACES REV 'A' WITH CHANGE (6) ADDED POINT TO POINT AND PICTURE REF. 1B2972 PROPER CUSTOMER DATA (12-6-6) TDRP 02946	6 MARCH 64	CJK MEM
		C	CHANGE IN ACCORDANCE WITH CM 195783	24 APR 64	PJ
			ADDED CUSTOMER DATA (V2-6-6) TDRP 02947	5 JUN 64	WK

REV	B	C	B	B	C
SHEET	1	2	3	4	5	6	7
REV STATUS (REV) OF SHEETS	C	C	B	B	C

AC SPARK PLUG DIVISION, GMC MILWAUKEE, WISCONSIN

MANNED SPACECRAFT CENTER HOUSTON, TEXAS

ACSP PN

DRAWN C. Kostich 22 OCT 63 DATE
CHECKED 22 OCT 63
APPROVAL
APPROVAL

CABLE INTERCONNECT W100
BPP TO PTC

CODE IDENT NO. SIZE 1900955 REV C

NASA APPROVAL
MIT APPROVAL

SCALE — SHEET 1 OF 7

CONTRACT NAS 9-497

PENNANT NOTE — GENERAL NOTES

TOLERANCE CHART, UNLESS OTHERWISE SPECIFIED —

APPLICABLE LENGTH FOR WIRE OR CABLE, STRIP WIRE, STRIP JACKET, CUT WIRE OR CUT SHIELD.	TOLERANCE: WIRE OR CABLE	STRIP: WIRE	STRIP: JACKET	CUT: WIRE	CUT: SHIELD
UNDER 1 INCH	+ .06-.00	+.03-.00	+.06-.06	+.06-.06	+.06-.06
1 INCH TO 6 INCHES	+ .50-.00	+.06-.00	+.25-.25	+.25-.25	+.25-.25
6 INCHES TO 6 FEET	+1.00-.00		+.50-.50	+.50-.50	+.50-.50
OVER 6 FEET	+2.00-.00				

MANNED SPACECRAFT CENTER HOUSTON, TEXAS	SIZE A	1900955
SCALE - NONE	REV LTR B	SHEET 3 OF 7

MIL 2064 4-63

1900955

REVISIONS					
SYM	ZONE	DESCRIPTION	CHG NO.	DATE	APPD.

PICTURE INCOMPLETE. DRAWING INFORMATION WILL FOLLOW WHEN AVAILABLE.

FOR INFORMATION ONLY

CLASS B RELEASE TDR No. 04704 DATE 11/19/63

ITEM NO.	NO. REQD	PART OR IDENTIFYING NUMBER	NOMENCLATURE OR DESCRIPTION
8	1	1016183-001	TRANSITION, 3-FINGER
7	1	1016197-006	TUBING, SHRINK, FLEXIBLE, MODIFIED PVC-4 FT LG
6	1	1016197-007	TUBING, SHRINK, FLEXIBLE, MODIFIED PVC-8 FT LG
5	1	ND1002181	WIRE, TYPE I, CLASS 1, WHITE, #20 AWG-120 FT LG
4	1	1016134-81	
3	1	MS3126F-14-19P	(1897089-190)
2	1	MS3126F-12-10PW	(1897038-101)
1	1	MS3126F-12-3SY	CONNECTOR, PLUG (1897039-33)

LIST OF PARTS AND MATERIALS

NEXT ASSY	USED ON
1900011-011	1900011-011

APPLICATION

UNLESS OTHERWISE SPECIFIED-
DIMENSIONS ARE IN INCHES
TOLERANCES ON
FRACTIONS ± ± DECIMALS ± ± ANGLES ± ±

DO NOT SCALE THIS DRAWING

MATERIAL

CONTRACT NAS9-497

AC SPARK PLUG DIVISION, GMC
MILWAUKEE, WISCONSIN

ACSP PN

DRAWN C. LENZ DATE 22 OCT 63
CHECKED J. L. Milton
APPROVAL R. Blinde 10-24-63
APPROVAL J. Gelinman 11/15/63
NASA APPROVAL J. Barnard
MIT APPROVAL D. Hatfel 11/19/63

MANNED SPACECRAFT CENTER
HOUSTON, TEXAS

CABLE, ELECTRICAL, INTERCONNECT-W100 (BPP TO PTC)

CODE IDENT NO. | SIZE C | 1900955

SCALE — | SHEET 1 OF 1

MIL 1077C-P

INCHES 0 1 2
PHOTOGRAPHIC SCALE ONLY

PENNANT NOTE	GENERAL NOTES
1	SEE CONDUCTOR CHART
2	SEE CONDUCTOR CHART
3	INTERPRET DRAWING IN ACCORDANCE WITH STANDARDS PRESCRIBED BY MIL-D-70327.
4	MARK CONDUCTOR IDENTIFICATION ON SINGLE CONDUCTORS PER ND1002019 OMITTING ALL SUFFIX LETTERS EXCEPT A AND B.
5	SPACING OF CONDUCTOR IDENTIFICATION SHALL BE EVERY 15 INCHES MAX. AND AT EACH TERMINATION.
6	SPIRALLING OF THE MARKING IS ALLOWED.
7	IDENTIFY USING DRAWING NO. AND REVISION LETTER PER MIL-STD-130 (ES-267). .12 INCH HIGH CHARACTERS BLACK.
8	Y OR N IN TINNED COLUMN INDICATES YES OR NO.
9	A LETTER WITH AN ASTERISK SUFFIX INDICATES A LOWER CASE LETTER.
10	VENDOR ITEM - SEE SPECIFICATION CONTROL DRAWING.
11	MARK IDENTIFICATION BAND WITH REFERENCE DESIGNATION AS NOTED .12 INCH HIGH COLOR BLACK. HOT IMPRESSION STAMPING PER ND1002019. CENTRALIZE.
12	MARK SLEEVING WITH REFERENCE DESIGNATION AS SHOWN .12 INCH HIGH. COLOR BLACK PER ND1002019.
13	MARK SLEEVING OF MULTI-CONDUCTORS WITH THE CONDUCTOR NUMBER .12 INCH HIGH. COLOR BLACK. PER ND1002019 WHEN SLEEVING ITEM NUMBERS FOLLOW AN A OR T IN THE ACCESSORIES ITEM NUMBER FIELD.

PENNANT NOTE	GENERAL NOTES
14	A OR T PREFIX IN THE ACCESSORIES ITEM NUMBER COLUMN INDICATES THE READING POSITION AWAY FROM TERMINATION OR TOWARD TERMINATION RESPECTIVELY, OF THE WIRE MARKER SLEEVE.
15	THE SUFFIX LETTER OF A CONDUCTOR IDENTIFICATION NUMBER INDICATES CONDUCTOR SHIELDING, COLOR, OR MARKING. A - FROM END SHIELD L - WHITE WITH BLUE TRACER OR LETTER L R - WHITE WITH RED TRACER OR LETTER R Y - WHITE WITH YELLOW TRACER OR LETTER Y W - WHITE
16	ASSEMBLE CONTACTS IN ALL CONNECTOR GROMMET HOLES.
17	SECURE TO CABLE USING ITEM 25. MARKING TO READ AWAY FROM CONNECTOR.
18	SEAL ZIPPER TUBING PER ND1002153.
19	SERIALIZE PER ND1002023.
20	ITEM 26 FURNISHED WITH ITEM 7
21	ITEM 27 FURNISHED WITH ITEM 8
22	ITEM 28 SHALL BE SHORTENED WHEN NECESSARY TO AVOID INTERFERENCE WITH FERRULES AND MAY BE CUT LENGTHWISE ON ONE SIDE. SELECT ONE OR MORE OF ITEM 28 AS REQUIRED TO FIT.

REVISIONS

SYM	DESCRIPTION	DATE	APPROVAL
A	CHANGE IN ACCORDANCE WITH CM-193764 10RR0121	6 FEB -64	

APPLICATION

NEXT ASSY	USED ON
1901308	1900005-011

FOR INFORMATION ONLY

CLASS B RELEASE TDR No. 24612 DATE 6 Dec

REV	SHEET	REV STATUS	REV	OF SHEETS	SHEET
			A		1
			A		2
			A		3
			A		4
			A		5
			A		6
			A		7
			A		8
			A		9
			A		10
			A		11
			A		12
			A		13
			A		14
			A		15

AC SPARK PLUG DIVISION, GMC
MILWAUKEE, WISCONSIN

ACSP PN

DRAWN 25 Oct 63
CHECKED 4 Nov 63
APPROVAL 5 Nov 63
APPROVAL 11/12/62
NASA APPROVAL
MIT APPROVAL

MANNED SPACECRAFT CENTER HOUSTON, TEXAS

CABLE INTERCONNECT W56
OSS TESTING

CODE IDENT NO. | SIZE A | 1900956 | REV A

SCALE NONE | SHEET 1 OF 15

CONTRACT NAS9-497

PENNANT NOTE	GENERAL NOTES

TOLERANCE CHART, UNLESS OTHERWISE SPECIFIED ---

APPLICABLE LENGTH FOR WIRE OR CABLE, STRIP WIRE, STRIP JACKET, CUT WIRE OR CUT SHIELD.	TOLERANCE: WIRE OR CABLE	STRIP: WIRE	STRIP: JACKET	CUT: WIRE	CUT: SHIELD
UNDER 1 INCH	+ .06-.00	+.03-.00	+.06-.06	+.06-.06	+.06-.06
1 INCH TO 6 INCHES	+ .50-.00	+.06-.00	+.25-.25	+.25-.25	+.25-.25
6 INCHES TO 6 FEET	+1.00-.00		+.50-.50	+.50-.50	+.50-.50
OVER 6 FEET	+2.00-.00				

PENNANT NOTE — LIST OF MATERIALS

NOTE	ITEM	QTY	PART NO	DESCRIPTION
	1	1	1900956-001	WIRE ND1002181 TYPE 3 CLASS 4, WHT. JKT., 20AWG WHT/BLU, WHT/RED, WHT/YEL 18 FT. TOT. LENGTH
	2	1	1900956-002	WIRE ND1002181 TYPE 2 CLASS 4, WHT. JKT., 20AWG WHT/BLU, WHT/RED, 324 FT. TOTAL LENGTH
	3	1	1900956-003	WIRE ND1002181 TYPE 1 CLASS 4, WHT. JKT., 20AWG WHT., 72 FT. TOTAL LENGTH
	4	1	1900956-004	WIRE ND1002181 TYPE 1 CLASS 1, 20AWG, WHITE, 198 FT. TOTAL LENGTH
	5	1	1900956-005	WIRE ND1002181 TYPE 1 CLASS 1, 22AWG, WHITE, 12 FT. TOTAL LENGTH
	6	1	1900956-006	WIRE ND1002181 TYPE 2 CLASS 1, T2, 20AWG, WHITE (CONDUCTORS MARKED R AND L RESPECTIVELY) 55 FT. TOTAL LENGTH
16	7	1	MS3126F24-61P	(1897047-610) CONNECTOR-PLUG
16	8	1	MS3126F24-61S	(1897048-610) CONNECTOR-PLUG
10	9	4	1000243-004	FERRULE ELEC. COND.
10	10	4	1000242-004	FERRULE ELEC. COND.
10	11	18	1000243-011	FERRULE ELEC. COND.
10	12	18	1000242-009	FERRULE ELEC. COND.
10	13	1	1000243-015	FERRULE ELEC. COND.
10	14	1	1000242-016	FERRULE ELEC. COND.
10	15	4	1010490-198	INSULATION-SLEEVING, ELEC.

MANNED SPACECRAFT CENTER HOUSTON, TEXAS | SIZE A | 1900956
SCALE-NONE | REV LTR A | SHEET 5 OF 15

PENNANT NOTE — LIST OF MATERIALS

NOTE	ITEM	QTY	PART NO	DESCRIPTION
10	16	4	1010490-200	INSULATION-SLEEVING ELEC.
10	17	19	1010490-194	INSULATION-SLEEVING ELEC.
10	18	19	1010490-196	INSULATION-SLEEVING ELEC.
10	19	4	1010490-256	INSULATION-SLEEVING ELEC.
10	20	6	1010490-188	INSULATION-SLEEVING ELEC.
10	21	4	1016006-003	SPLICE REDUCER
10	22	2	1016128-041	BAND-IDENTIFICATION
10	23	1	1016128-011	BAND-IDENTIFICATION
	24	1	1900956-007	ZIPPER TUBING ND1002155 TYPE 1, PLASTIC, FLEXIBLE 1.125 DIA. 18 FT. TOTAL LENGTH
	25	AR	MIL-T-713	LACING TAPE TYPE P, CLASS 2 BLACK (ES-2732 NO. 18)
20	26			CONTACT PINS
21	27			CONTACT, SOCKETS
22	28	AR	1897147-112, -116	CABLE CLAMP SLEEVE

MANNED SPACECRAFT CENTER HOUSTON, TEXAS | SIZE A | 1900956
SCALE-NONE | REV LTR A | SHEET 6 OF 15

CONDUCTOR INDIVIDUAL LENGTH NUMBER	ITEM NO.	2	FROM CUT WIRE OR SHIELD STRIP WIRE OR JACKET CIRCUIT POINT	2	TIN	2	TERMINATION SPEC. 1	ITEM NO.	NO.	TO CUT WIRE OR SHIELD STRIP WIRE OR JACKET CIRCUIT POINT	2	TIN	2	TERMINATION SPEC. 1	ITEM NO.	NO.
A 1	6							A 20							A 20	
A 1L			P1-C		22N			26		P2-C		22N			27	
A 1R			P1-B		22N			26		P2-B		22N			27	
A 2	6							A 20							A 20	
A 2L			P1-E		22N			26		P2-E		22N			27	
A 2R			P1-D		22N			26		P2-D		22N			27	
A 3	6							A 20							A 20	
A 3L			P1-G		22N			26		P2-G		22N			27	
A 3R			P1-F		22N			26		P2-F		22N			27	
A 4	4		P1-N		22N			26		P2-N		22N			27	
A 5	4		P1-P		22N			26		P2-P		22N			27	
A 6	4		P1-R		22N			26		P2-R		22N			27	
A 7	2				23Q		20Q	11 12	5			23Q		20Q	A 18	7A
								A 17								
A 7A	5		SHLD A7		22N					E1		37N				
A 7L			P1-T		22N			26		P2-T		22N			27	
A 7R			P1-U		22N			26		P2-U		22N			27	
A 8	3				23Q		20Q	9 10	5			23Q		20Q	A 16	7A

1 THE STD CONDUCTOR TERMINATION FIGURES ARE PER
2 DIMENSIONS ARE IN INCHES AND TWO PLACE DECIMALS.

MIL 2085 - 4.63 WIR

MANNED SPACECRAFT CENTER HOUSTON, TEXAS | SIZE A | 1900956
SCALE-NONE | REV LTR A | SHEET 7 OF 15

CONDUCTOR INDIVIDUAL LENGTH NUMBER	ITEM NO.	2	FROM CUT WIRE OR SHIELD STRIP WIRE OR JACKET CIRCUIT POINT	2	TIN	2	TERMINATION SPEC. 1	ITEM NO.	NO.	TO CUT WIRE OR SHIELD STRIP WIRE OR JACKET CIRCUIT POINT	2	TIN	2	TERMINATION SPEC. 1	ITEM NO.	NO.
								A 15								
A 8A	5		SHLD A8		22N					E1		37N				
A 8W			P1-S		22N			26		P2-S		22N			27	
A 9	2				23Q		20Q	11 12	5			23Q		20Q	A 18	7A
								A 17								
A 9A	5		SHLD A9		22N					E1		37N				
A 9L			P1-W		22N			26		P2-W		22N			27	
A 9R			P1-V		22N			26		P2-V		22N			27	
A 10	2				23Q		20Q	11 12	5			23Q		20Q	A 18	7A
								A 17								
A 10A	5		SHLD A10		22N					E1		37N				
A 10L			P1-Y		22N			26		P2-Y		37N			27	
A 10R			P1-X		22N			26		P2-X		37N			27	
A 11	3				23Q		20Q	9 10	5			23Q		20Q	A 16	7A
								A 15								
A 11A	5		SHLD A11		22N					E1		37N				
A 11W			P1-Z		22N			26		P2-Z		22N			27	
A 12	4		P1-B*		22N			26		P2-B*		22N			27	

1 THE STD CONDUCTOR TERMINATION FIGURES ARE PER
2 DIMENSIONS ARE IN INCHES AND TWO PLACE DECIMALS.

MIL 2085 - 4.63 WIR

MANNED SPACECRAFT CENTER HOUSTON, TEXAS | SIZE A | 1900956
SCALE-NONE | REV LTR A | SHEET 8 OF 15

GHR CABLE W-56 A 1900956

CONDUCTOR INDIVIDUAL LENGTH NUMBER	ITEM NO.	2	FROM CUT WIRE OR SHIELD STRIP WIRE OR JACKET CIRCUIT POINT	2	TIN	2	TERMINATION SPEC. 1 ITEM NO.	NO.	TO CUT WIRE OR SHIELD STRIP WIRE OR JACKET CIRCUIT POINT	2	TIN	2	TERMINATION SPEC. 1 ITEM NO.	NO.
A 13	2			28Q		25Q	11 12	5		28Q		25Q	A 18	7A
							A 17							
A 13A	5		SHLD A13	22N					E2	37N				
A 13L			P1-D*	22N			26		P2-D*	22N			27	
A 13R			P1-C*	22N			26		P2-C*	22N			27	
A 14	2			28Q		25Q	11 12	5		28Q		25Q	A 18	7A
							A 17							
A 14A	5		SHLD A14	22N					E2	37N				
A 14L			P1-F*	22N			26		P2-F*	22N			27	
A 14R			P1-E*	22N			26		P2-E*	22N			27	
A 15	2			28Q		25Q	11 12	5		28Q		25Q	A 18	7A
							A 17							
A 15A	5		SHLD A15	22N					E2	37N				
A 15L			P1-H*	22N			26		P2-H*	22N			27	
A 15R			P1-G*	22N			26		P2-G*	22N			27	
A 16	2			28Q		25Q	11 12	5		28Q		25Q	A 18	7A
							A 17							
A 16A	5		SHLD A16	22N					E2	37N				

1 THE STD CONDUCTOR TERMINATION FIGURES ARE PER
2 DIMENSIONS ARE IN INCHES AND TWO PLACE DECIMALS.

MANNED SPACECRAFT CENTER HOUSTON, TEXAS | SIZE A | 1900956
SCALE - NONE | REV LTR A | SHEET 9 OF 15

MIL 2069 - 4-63 WIR

GHR CABLE W-56 A 1900956

CONDUCTOR INDIVIDUAL LENGTH NUMBER	ITEM NO.	2	FROM CUT WIRE OR SHIELD STRIP WIRE OR JACKET CIRCUIT POINT	2	TIN	2	TERMINATION SPEC. 1 ITEM NO.	NO.	TO CUT WIRE OR SHIELD STRIP WIRE OR JACKET CIRCUIT POINT	2	TIN	2	TERMINATION SPEC. 1 ITEM NO.	NO.
A 16L			P1-J*	22N			26		P2-J*	22N			27	
A 16R			P1-I*	22N			26		P2-I*	22N			27	
A 17	2			33Q		30Q	11 12	5		33Q		30Q	A 18	7A
							A 17							
A 17A	5		SHLD A17	22N					E2	37N				
A 17L			P1-M*	22N			26		P2-M*	22N			27	
A 17R			P1-K*	22N			26		P2-K*	22N			27	
A 18	2			33Q		30Q	11 12	5		33Q		30Q	A 18	7A
							A 17							
A 18A	5		SHLD A18	22N					E2	37N				
A 18L			P1-P*	22N			26		P2-P*	22N			27	
A 18R			P1-N*	22N			26		P2-N*	22N			27	
A 19	2			33Q		30Q	11 12	5		33Q		30Q	A 18	7A
							A 17							
A 19A	5		SHLD A19	22N					E2	37N				
A 19L			P1-R*	22N			26		P2-R*	22N			27	
A 19R			P1-Q*	22N			26		P2-Q*	22N			27	
A 20	2			33Q		30Q	11 12	5		33Q		30Q	A 18	7A

1 THE STD CONDUCTOR TERMINATION FIGURES ARE PER
2 DIMENSIONS ARE IN INCHES AND TWO PLACE DECIMALS.

MANNED SPACECRAFT CENTER HOUSTON, TEXAS | SIZE A | 1900956
SCALE - NONE | REV LTR A | SHEET 10 OF 15

MIL 2069 - 4-63 WIR

GHR CABLE W-56 A 1900956

CONDUCTOR INDIVIDUAL LENGTH NUMBER	ITEM NO.	2	FROM CUT WIRE OR SHIELD STRIP WIRE OR JACKET CIRCUIT POINT	2	TIN	2	TERMINATION SPEC. 1 ITEM NO.	NO.	TO CUT WIRE OR SHIELD STRIP WIRE OR JACKET CIRCUIT POINT	2	TIN	2	TERMINATION SPEC. 1 ITEM NO.	NO.
							A 17							
A 20A	5		SHLD A20	22N					E3	37N				
A 20L			P1-T*	22N			26		P2-T*	22N			27	
A 20R			P1-S*	22N			26		P2-S*	22N			27	
A 21	4		P1-U*	22N			26		P1-U*	22N			26	
A 22	4		P1-V*	22N			26		P1-V*	22N			26	
A 23	4		P1-W*	22N			26		P1-W*	22N			26	
A 24	3			38Q		35Q	9 10	5		38Q		35Q	A 16	7A
							A 15							
A 24A	5		SHLD A24	22					E3	37N				
A 24W			P1-X*	22			26		P2-X*	22N			27	
A 25	2			38Q		35Q	11 12	5		38Q		35Q	A 18	7A
							A 17							
A 25A	5		SHLD A25	22N					E3	37N				
A 25L			P1-Z*	22N			26		P2-Z*	22N			27	
A 25R			P1-Y*	22N			26		P2-Y*	22N			27	
A 26	2			38Q		35Q	11 12	5		38Q		35Q	A 18	7A
							A 17							

1 THE STD CONDUCTOR TERMINATION FIGURES ARE PER
2 DIMENSIONS ARE IN INCHES AND TWO PLACE DECIMALS.

MANNED SPACECRAFT CENTER HOUSTON, TEXAS | SIZE A | 1900956
SCALE - NONE | REV LTR A | SHEET 11 OF 15

MIL 2069 - 4-63 WIR

GHR CABLE W-56 A 1900956

CONDUCTOR INDIVIDUAL LENGTH NUMBER	ITEM NO.	2	FROM CUT WIRE OR SHIELD STRIP WIRE OR JACKET CIRCUIT POINT	2	TIN	2	TERMINATION SPEC. 1 ITEM NO.	NO.	TO CUT WIRE OR SHIELD STRIP WIRE OR JACKET CIRCUIT POINT	2	TIN	2	TERMINATION SPEC. 1 ITEM NO.	NO.
A 26A	5		SHLD A26	22N					E3	37N				
A 26L			P1-CC	22N			26		P2-CC	22N			27	
A 26R			P1-BB	22N			26		P2-BB	22N			27	
A 27	2			38Q		35Q	11 12	5		38Q		35Q	A 18	7A
							A 17							
A 27A	5		SHLD A27	22N					E3	37N				
A 27L			P1-EE	22N			26		P2-EE	22N			27	
A 27R			P1-DD	22N			26		P2-DD	22N			27	
A 28	2			43Q		40Q	11 12			43Q		40Q	A 18	7A
							A 17							
A 28A	5		SHLD A28						E3	37N				
A 28L			P1-GG				26		P2-GG	22N			27	
A 28R			P1-FF				26		P2-FF	22N			27	
A 29	3			43Q		40Q	9 10	5		43Q		40Q	A 16	7A
							A 15							
A 29A	5		SHLD A29	22N					E4	37N				
A 29W			P1-MM	22N			26		P2-MM	22N			27	
A 30	4		P1-A*	22N			26		P2-A*	22N			27	

1 THE STD CONDUCTOR TERMINATION FIGURES ARE PER
2 DIMENSIONS ARE IN INCHES AND TWO PLACE DECIMALS.

MANNED SPACECRAFT CENTER HOUSTON, TEXAS | SIZE A | 1900956
SCALE - NONE | REV LTR A | SHEET 12 OF 15

MIL 2069 - 4-63 WIR

GHR CABLE W-56 A 1900956

CONDUCTOR INDIVIDUAL LENGTH NUMBER	ITEM NO.	2	FROM CUT WIRE OR SHIELD STRIP WIRE OR JACKET CIRCUIT POINT	2	TIN	2	TERMINATION SPEC. 1 ITEM NO.	NO.	TO CUT WIRE OR SHIELD STRIP WIRE OR JACKET CIRCUIT POINT	2	TIN	2	TERMINATION SPEC. 1 ITEM NO.	NO.
A 31	4		P1-J	22N		26			P2-J	22N		27		
A 32	2			43Q	40Q	11	12	5		43Q	40Q	A 18	7A	
						A	17							
A 32A	5		SHLD A32	22N					E4	37N				
A 32L			P1-KK	22N		26			P2-KK	22N		27		
A 32R			P1-JJ	22N		26			P2-JJ	22N		27		
A 33	2			43Q	40Q	11	12	5		43Q	40Q	A 18	7A	
						A	17							
A 33A	5		SHLD A33						E4	37N				
A 33L			P1-MM			26			P2-MM	22N		27		
A 33R			P1-LL			26			P2-LL	22N		27		
A 34	2			48Q	45Q	11	12			48Q	45Q	A 18	7A	
						A	17							
A 34A	5		SHLD A34	22N					E4	22N				
A 34L			P1-AA	22N		26			P2-AA	22N		27		
A 34R			P1-NN	22N		26			P2-NN	22N		27		
A 35	1			48Q	45Q	13	14	5		48Q	45Q	A 18	7A	
						A	17							

1 THE STD CONDUCTOR TERMINATION FIGURES ARE PER
2 DIMENSIONS ARE IN INCHES AND TWO PLACE DECIMALS.

MANNED SPACECRAFT CENTER HOUSTON, TEXAS | SIZE A | 1900956
SCALE - NONE | REV LTR A | SHEET 13 OF 15

MIL 2089 - 4-65 WIR

GHR CABLE W-56 A 1900956

CONDUCTOR INDIVIDUAL LENGTH NUMBER	ITEM NO.	2	FROM CUT WIRE OR SHIELD STRIP WIRE OR JACKET CIRCUIT POINT	2	TIN	2	TERMINATION SPEC. 1 ITEM NO.	NO.	TO CUT WIRE OR SHIELD STRIP WIRE OR JACKET CIRCUIT POINT	2	TIN	2	TERMINATION SPEC 1 ITEM NO.	NO.
A 35A	5		SHLD A35	22N					E4	37N				
A 35L			P1-L	22N		26			P2-L	22N		27		
A 35R			P1-K	22N		26			P2-K	22N		27		
A 35Y			P1-M	22N		26			P2-M	22N		27		
A 36	4		P1-H	22N		26			E1	22N				
A 37	4		E1	22N					E2	22N				
A 38	4		E2	22N					E3	22N				
A 39	4		E3	22N					E4	22N				

1 THE STD CONDUCTOR TERMINATION FIGURES ARE PER
2 DIMENSIONS ARE IN INCHES AND TWO PLACE DECIMALS.

MANNED SPACECRAFT CENTER HOUSTON, TEXAS | SIZE A | 1900956
SCALE - NONE | REV LTR A | SHEET 14 OF 15

MIL 2089 - 4-65 WIR

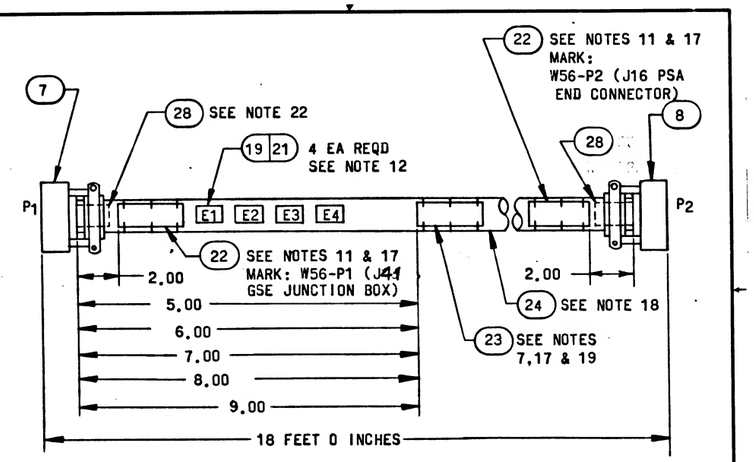

LOCATION TOLERANCE (EXCEPT LENGTH):
+.50
-.50

MANNED SPACECRAFT CENTER HOUSTON, TEXAS | SIZE A | 1900956
SCALE - NONE | REV LTR A | SHEET 15 of 15

PENNANT NOTE	GENERAL NOTES
1	SEE CONDUCTOR CHART
2	SEE CONDUCTOR CHART
3	INTERPRET DRAWING IN ACCORDANCE WITH STANDARDS PRESCRIBED BY MIL-D-70327.
4	MARK CONDUCTOR IDENTIFICATION ON SINGLE CONDUCTORS PER ND1002019 OMITTING ALL SUFFIX LETTERS EXCEPT A AND B.
5	SPACING OF CONDUCTOR IDENTIFICATION SHALL BE EVERY 15 INCHES MAX. AND AT EACH TERMINATION.
6	SPIRALLING OF THE MARKING IS ALLOWED.
7	IDENTIFY USING DRAWING NO. AND REVISION LETTER PER MIL-STD-130 (ES-267). .12 INCH HIGH CHARACTERS BLACK.
8	Y OR N IN TINNED COLUMN INDICATES YES OR NO.
9	A LETTER WITH AN ASTERISK SUFFIX INDICATES A LOWER CASE LETTER.
10	VENDOR ITEM - SEE SPECIFICATION CONTROL DRAWING.
11	MARK IDENTIFICATION BAND WITH REFERENCE DESIGNATION AS NOTED .12 INCH HIGH COLOR BLACK, HOT IMPRESSION STAMPING PER ND1002019. CENTRALIZE.
12	MARK SLEEVING WITH REFERENCE DESIGNATION AS SHOWN .12 INCH HIGH, COLOR BLACK PER ND1002019.
13	MARK SLEEVING OF MULTI-CONDUCTORS WITH THE CONDUCTOR NUMBER .12 INCH HIGH, COLOR BLACK, PER ND1002019 WHEN SLEEVING ITEM NUMBERS FOLLOW AN A OR T IN THE ACCESSORIES ITEM NUMBER FIELD.

MIL 2784 4-63

PENNANT NOTE	GENERAL NOTES
14	A OR T PREFIX IN THE ACCESSORIES ITEM NUMBER COLUMN INDICATES THE READING POSITION AWAY FROM TERMINATION OR TOWARD TERMINATION RESPECTIVELY, OF THE WIRE MARKER SLEEVE.
15	THE SUFFIX LETTER OF A CONDUCTOR IDENTIFICATION NUMBER INDICATES CONDUCTOR SHIELDING, COLOR, OR MARKING. A - FROM END SHIELD L - WHITE WITH BLUE TRACER OR LETTER L R - WHITE WITH RED TRACER OR LETTER R Y - WHITE WITH YELLOW TRACER OR LETTER Y W - WHITE
16	ASSEMBLE CONTACTS IN ALL CONNECTOR GROMMET HOLES.
17	SECURE TO CABLE USING ITEM 25. MARKING TO READ AWAY FROM CONNECTOR.
18	SEAL ZIPPER TUBING PER ND1002153.
19	SERIALIZE PER ND1002023.
20	ITEM 26 FURNISHED WITH ITEM 7
21	ITEM 27 FURNISHED WITH ITEM 8
22	ITEM 28 SHALL BE SHORTENED WHEN NECESSARY TO AVOID INTERFERENCE WITH FERRULES AND MAY BE CUT LENGTHWISE ON ONE SIDE. SELECT ONE OR MORE OF ITEM 28 AS REQUIRED TO FIT.

MIL 2784 4-63

APPLICATION

NEXT ASSY	USED ON
1901308	1900005-011 (M)

REVISIONS TDR 04812

SYM	DESCRIPTION	DATE	APPROVAL
A	CHANGE IN ACCORDANCE WITH CM-193764 TDRR0121	6 FEB 64	
B	CHANGE IN ACCORDANCE WITH CM-302648 TDRR 15205	15 SEP 64	
C	REVISED PER CM 304876 TDRR 15406	27 NOV 64	
D	REVISED PER CM 305321 TDRR 15761	11 DEC 64	

REV																		
SHEET																		
REV STATUS																		
OF SHEETS																		
SHEET	1	2	3	4	5	6	7	8	9	10	11	12	13	14	15	16	17	18
REV	D	B	B	B	B	B	B	B	B	B	B	B	B	B	B	B	B	C

AC SPARK PLUG DIVISION, GMC
MILWAUKEE, WISCONSIN

ACSP PN

DRAWN T. Hernandez DATE 25 Jan 63
CHECKED 4 Nov 63
APPROVAL T. Abraham 5 Nov 63
APPROVAL L. Gehlmann 11/12/63

MANNED SPACECRAFT CENTER HOUSTON, TEXAS

CABLE INTERCONNECT W56
OSS TESTING

CODE IDENT NO. | SIZE A | 1900956 | REV D

NASA APPROVAL
MIT APPROVAL
CONTRACT NAS9-497

SCALE NONE | SHEET 1 OF 18

PENNANT NOTE — GENERAL NOTES

TOLERANCE CHART, UNLESS OTHERWISE SPECIFIED ---

APPLICABLE LENGTH FOR WIRE OR CABLE, STRIP WIRE, STRIP JACKET, CUT WIRE OR CUT SHIELD.	TOLERANCE				
	WIRE OR CABLE	STRIP WIRE	STRIP JACKET	CUT WIRE	CUT SHIELD
UNDER 1 INCH	+ .06-.00	+.03-.00	+.06-.06	+.06-.06	+.06-.06
1 INCH TO 6 INCHES	+ .50-.00	+.06-.00	+.25-.25	+.25-.25	+.25-.25
6 INCHES TO 6 FEET	+1.00-.00		+.50-.50	+.50-.50	+.50-.50
OVER 6 FEET	+2.00-.00				

MIL 2784 4-63

PENNANT LIST OF MATERIALS

NOTE	ITEM	QTY	PART NO	DESCRIPTION
10	16	10	1010490-200	INSULATION-SLEEVING ELEC.
10	17	11	1010490-194	INSULATION-SLEEVING ELEC.
10	18	11	1010490-196	INSULATION-SLEEVING ELEC.
10	19	4	1010490-256	INSULATION-SLEEVING ELEC.
10	20	6	1010490-188	INSULATION-SLEEVING ELEC.
10	21	4	1016006-003	SPLICE REDUCER
10	22	2	1016128-041	BAND-IDENTIFICATION
10	23	1	1016128-011	BAND-IDENTIFICATION
	24	1	1900956-007	ZIPPER TUBING ND1002155 TYPE 1, PLASTIC, FLEXIBLE 1.125 DIA. 18 FT. TOTAL LENGTH
	25	AR	MIL-T-713	LACING TAPE TYPE P, CLASS 2 BLACK (ES-2732 NO. 18)
20	26			CONTACT PINS
21	27			CONTACT, SOCKETS
22	28	AR	1897147-112,	-116 CABLE CLAMP SLEEVE
	29	1	1900956-008	WIRE COAXIAL MIL-L 17/69A 188A/U, 24 FT TOT. LG
	30	8	1000243-006	FERRULE ELECT, COND.
	31	8	1000242-005	FERRULE ELECT, COND.
	32	8	1016369-188	INNER MALE PIN

MANNED SPACECRAFT CENTER HOUSTON, TEXAS | SIZE A | 1900956
SCALE-NONE | REV LTR B | SHEET 6 OF 18

MIL 2084 4-63

PENNANT LIST OF MATERIALS

NOTE	ITEM	QTY	PART NO	DESCRIPTION
	33	8	1016369-488	OUTER FEMALE BODY
	34	8	1016369-588	HYRING
	35	4	1016369-421	CONTACT SOCKETS
	36	2	1900956-009	TUBING, MODIFIED POLYVINYL CHLORIDE, FLEXIBLE SHRINK-FIT PER 1016197-007, 3 FEET TOTAL LENGTH
	37	1	1900956-010	TUBING, MODIFIED POLYVINYL CHLORIDE, FLEXIBLE SHRINK-FIT PER 1016197-006 3 FEET TOTAL LENGTH.
	38	3	1016369-141	SOCKET BODY CONNECTOR
	39	1	1902170-004	POLARIZING SHELL
	40	1	1902170-005	POLARIZING SHELL
	41	1	1902170-003	POLARIZING SHELL
	42	1	1900956-011	ZIPPER TUBING ND 1002155, TYPE 1 PLASTIC FLEXIBLE, 2 IN. DIA., 5 IN. TOT. LENGTH

MANNED SPACECRAFT CENTER HOUSTON, TEXAS | SIZE A | 1900956
SCALE-NONE | REV LTR D | SHEET 7 OF 18

MIL 2084 4-63

PENNANT LIST OF MATERIALS

NOTE	ITEM	QTY	PART NO	DESCRIPTION
	1			DELETED 1900956-001
	2	1	1900956-002	WIRE ND1002181 TYPE 2 CLASS 4, WHT. JKT., 20AWG WHT/BLU, WHT/RED, 198 FT. TOTAL LENGTH
	3	1	1900956-003	WIRE ND1002181 TYPE 1 CLASS 4, WHT. JKT., 20AWG WHT., 48 FT. TOTAL LENGTH
	4	1	1900956-004	WIRE ND1002181 TYPE 1 CLASS 1, 20AWG, WHITE, 198 FT. TOTAL LENGTH
	5	1	1900956-005	WIRE ND1002181 TYPE 1 CLASS 1, 22AWG, WHITE, 12 FT. TOTAL LENGTH
	6	1	1900956-006	WIRE ND1002181 TYPE 2 CLASS 1, T2, 20AWG, WHITE (CONDUCTORS MARKED R AND L RESPECTIVELY) 55 FT. TOTAL LENGTH
16	7	1	MS3126F24-61P	(1897047-610) CONNECTOR-PLUG
16	8	1	MS3126F24-61S	(1897048-610) CONNECTOR-PLUG
10	9	2	1000243-004	FERRULE ELEC. COND.
10	10	2	1000242-004	FERRULE ELEC. COND.
10	11	11	1000243-011	FERRULE ELEC. COND.
10	12	11	1000242-009	FERRULE ELEC. COND.
	13			DELETED 1000243-015
	14			DELETED 1000242-016
10	15	10	1010490-198	INSULATION-SLEEVING, ELEC.

MANNED SPACECRAFT CENTER HOUSTON, TEXAS | SIZE A | 1900956
SCALE-NONE | REV LTR B | SHEET 5 OF 18

MIL 2084 4-63

CONDUCTOR NUMBER	INDIVIDUAL LENGTH ITEM NO. [2]	FROM CUT WIRE OR SHIELD STRIP WIRE OR JACKET CIRCUIT POINT [2]	TIN [2]	TERMINATION SPEC. [1] ITEM NO.	NO.	TO CUT WIRE OR SHIELD STRIP WIRE OR JACKET CIRCUIT POINT [2]	TIN [2]	TERMINATION SPEC [1] ITEM NO.	NO.
A 1	6			A 20				A 20	
A 1L		P1-C	22N	26		P2-C	22N	27	
A 1R		P1-B	22N	26		P2-B	22N	27	
A 2	6			A 20				A 20	
A 2L		P1-E	22N	26		P2-E	22N	27	
A 2R		P1-D	22N	26		P2-D	22N	27	
A 3	6			A 20				A 20	
A 3L		P1-G	22N	26		P2-G	22N	27	
A 3R		P1-F	22N	26		P2-F	22N	27	
A 4	4	P1-N	22N	26		P2-N	22N	27	
A 5	4	P1-P	22N	26		P2-P	22N	27	
A 6	4	P1-R	22N	26		P2-R	22N	27	
A 7		DELETED							
A 7A		DELETED							
A 7L		DELETED							
A 7R		DELETED							
A 8		DELETED							
A 8A		DELETED							

[1] THE STD CONDUCTOR TERMINATION FIGURES ARE PER
[2] DIMENSIONS ARE IN INCHES AND TWO PLACE DECIMALS.

MANNED SPACECRAFT CENTER HOUSTON, TEXAS | SIZE A | 1900956
SCALE-NONE | REV LTR B | SHEET 8 OF 18

MIL 2085 - 4-63 WIR

GHR CABLE W-56 B 1900956

CONDUCTOR NUMBER	INDIVIDUAL LENGTH	ITEM NO.	2	FROM CUT WIRE OR SHIELD / STRIP WIRE OR JACKET / CIRCUIT POINT	2	T I N	2	TERMINATION SPEC. 1 ITEM NO.	NO.	TO CUT WIRE OR SHIELD / STRIP WIRE OR JACKET / CIRCUIT POINT	2	T I N	2	TERMINATION SPEC 1 ITEM NO.	NO.
A 14		2			280	250		11 12	5		280	250		A 18	7A
								A 17							
A 14A		5		SHLD A14	22N					E2	37N				
A 14L				P1-F*	22N			26		P2-F*	22N			27	
A 14R				P1-E*	22N			26		P2-E*	22N			27	
A 15		2			280	250		11 12	5		280	250		A 18	7A
								A 17							
A 15A		5		SHLD A15	22N					E2	37N				
A 15L				P1-H*	22N			26		P2-H*	22N			27	
A 15R				P1-G*	22N			26		P2-G*	22N			27	
A 16		2			280	250		11 12	5		280	250		A 18	7A
								A 17							
A 16A		5		SHLD A16	22N					E2	37N				
A 16L				P1-J*	22N			26		P2-J*	22N			27	
A 16R				P1-I*	22N			26		P2-I*	22N			27	
A 17				DELETED											
A 17A				DELETED											
A 17L				DELETED											

1 THE STD CONDUCTOR TERMINATION FIGURES ARE PER
2 DIMENSIONS ARE IN INCHES AND TWO PLACE DECIMALS.

MANNED SPACECRAFT CENTER HOUSTON, TEXAS | SIZE A | 1900956
SCALE - NONE | REV LTR B | SHEET 10 OF 18

MIL 2085 - 4-63 WIR

GHR CABLE W-56 B 1900956

CONDUCTOR NUMBER	INDIVIDUAL LENGTH	ITEM NO.	2	FROM CUT WIRE OR SHIELD / STRIP WIRE OR JACKET / CIRCUIT POINT	2	T I N	2	TERMINATION SPEC. 1 ITEM NO.	NO.	TO CUT WIRE OR SHIELD / STRIP WIRE OR JACKET / CIRCUIT POINT	2	T I N	2	TERMINATION SPEC 1 ITEM NO.	NO.
A 8W				DELETED											
A 9				DELETED											
A 9A				DELETED											
A 9L				DELETED											
A 9R				DELETED											
A 10				DELETED											
A 10A				DELETED											
A 10L				DELETED											
A 10R				DELETED											
A 11				DELETED											
A 11A				DELETED											
A 11W				DELETED											
A 12		4		P1-B*	22N			26		P2-B*	22N			27	
A 13		2			280	250		11 12	5		280	250		A 18	7A
								A 17							
A 13A		5		SHLD A13	22N					E2	37N				
A 13L				P1-D*	22N			26		P2-D*	22N			27	
A 13R				P1-C*	22N			26		P2-C*	22N			27	

1 THE STD CONDUCTOR TERMINATION FIGURES ARE PER
2 DIMENSIONS ARE IN INCHES AND TWO PLACE DECIMALS.

MANNED SPACECRAFT CENTER HOUSTON, TEXAS | SIZE A | 1900956
SCALE - NONE | REV LTR B | SHEET 9 OF 18

MIL 2085 - 4-63 WIR

GHR CABLE W-56 B 1900956

CONDUCTOR NUMBER	INDIVIDUAL LENGTH	ITEM NO.	2	FROM CUT WIRE OR SHIELD / STRIP WIRE OR JACKET / CIRCUIT POINT	2	T I N	2	TERMINATION SPEC. 1 ITEM NO.	NO.	TO CUT WIRE OR SHIELD / STRIP WIRE OR JACKET / CIRCUIT POINT	2	T I N	2	TERMINATION SPEC 1 ITEM NO.	NO.
A 17R				DELETED											
A 18		2			330	300		11 12	5		330	300		A 18	7A
								A 17							
A 18A		5		SHLD A18	22N					E2	37N				
A 18L				P1-P*	22N			26		P2-P*	22N			27	
A 18R				P1-N*	22N			26		P2-N*	22N			27	
A 19				DELETED											
A 19A				DELETED											
A 19L				DELETED											
A 19R				DELETED											
A 20		2			330	300		11 12	5		330	300		A 18	7A
								A 17							
A 20A		5		SHLD A20	22N					E3	37N				
A 20L				P1-T*	22N			26		P2-T*	22N			27	
A 20R				P1-S*	22N			26		P2-S*	22N			27	
A 21				DELETED											
A 22		4		P1-V*	22N			26		P1-V*	22N			26	
A 23		4		P1-W*	22N			26		P1-W*	22N			26	

1 THE STD CONDUCTOR TERMINATION FIGURES ARE PER
2 DIMENSIONS ARE IN INCHES AND TWO PLACE DECIMALS.

MANNED SPACECRAFT CENTER HOUSTON, TEXAS | SIZE A | 1900956
SCALE - NONE | REV LTR B | SHEET 11 OF 18

MIL 2085 - 4-63 WIR

GHR CABLE W-56 B 1900956

CONDUCTOR NUMBER	INDIVIDUAL LENGTH	ITEM NO.	2	FROM CUT WIRE OR SHIELD / STRIP WIRE OR JACKET / CIRCUIT POINT	2	T I N	2	TERMINATION SPEC. 1 ITEM NO.	NO.	TO CUT WIRE OR SHIELD / STRIP WIRE OR JACKET / CIRCUIT POINT	2	T I N	2	TERMINATION SPEC 1 ITEM NO.	NO.
A 24		3			380	350		9 10	5		380	350		A 16	7A
								A 15							
A 24A		5		SHLD A24	22					E3	37N				
A 24W				P1-X*	22			26		P2-X*	22N			27	
A 25		2			380	350		11 12	5		380	350		A 18	7A
								A 17							
A 25A		5		SHLD A25	22N					E3	37N				
A 25L				P1-Z*	22N			26		P2-Z*	22N			27	
A 25R				P1-Y*	22N			26		P2-Y*	22N			27	
A 26				DELETED											
A 26A				DELETED											
A 26L				DELETED											
A 26R				DELETED											
A 27				DELETED											
A 27A				DELETED											
A 27L				DELETED											
A 27R				DELETED											
A 28		2			430	400		11 12			430	400		A 18	7A

1 THE STD CONDUCTOR TERMINATION FIGURES ARE PER
2 DIMENSIONS ARE IN INCHES AND TWO PLACE DECIMALS.

MANNED SPACECRAFT CENTER HOUSTON, TEXAS | SIZE A | 1900956
SCALE - NONE | REV LTR B | SHEET 12 OF 18

MIL 2085 - 4-63 WIR

GHR

CABLE W-56 B 1900956

CONDUCTOR INDIVIDUAL LENGTH NUMBER	ITEM NO. [2]	FROM CUT WIRE OR SHIELD STRIP WIRE OR JACKET CIRCUIT POINT [2]	TIN [2]	TERMINATION SPEC. [1] ITEM NO.	NO.	TO CUT WIRE OR SHIELD STRIP WIRE OR JACKET CIRCUIT POINT [2]	TIN [2]	TERMINATION SPEC [1] ITEM NO.	NO.
A 33L		P1-MM		26		P2-MM	22N	27	
A 33R		P1-LL		26		P2-LL	22N	27	
A 34	2		480 450	11 12			480 450	A 18	7A
				A 17					
A 34A	5	SHLD A34	22N			E4	22N		
A 34L		P1-AA	22N	26		P2-AA	22N	27	
A 34R		P1-NN	22N	26		P2-NN	22N	27	
A 35		DELETED							
A 35A		DELETED							
A 35L		DELETED							
A 35R		DELETED							
A 35Y		DELETED							
A 36	4	P1-H	22N	26		E1	22N		
A 37	4	E1	22N			E2	22N		
A 38	4	E2	22N			E3	22N		
A 39	4	E3	22N			E4	22N		
A 40	29		230 200	30 31	5		56	A 16	
				A 15					

[1] THE STD CONDUCTOR TERMINATION FIGURES ARE PER
[2] DIMENSIONS ARE IN INCHES AND TWO PLACE DECIMALS.

MIL 2085 - 4-63 WIR

MANNED SPACECRAFT CENTER HOUSTON, TEXAS | SIZE A | 1900956

SCALE - NONE | REV LTR B | SHEET 14 OF 18

GHR

CABLE W-56 B 1900956

CONDUCTOR INDIVIDUAL LENGTH NUMBER	ITEM NO. [2]	FROM CUT WIRE OR SHIELD STRIP WIRE OR JACKET CIRCUIT POINT [2]	TIN [2]	TERMINATION SPEC. [1] ITEM NO.	NO.	TO CUT WIRE OR SHIELD STRIP WIRE OR JACKET CIRCUIT POINT [2]	TIN [2]	TERMINATION SPEC [1] ITEM NO.	NO.
A 40A	5	SHLD A40	37N			P2-M*	22N	27	
A 40B		SHLD A40				P3-B SHLD	N	25 33 34	
A 40W		P2-K*	22N	27		P3-B	18	32	
A 41	29		230 200	30 31	5		56	A 16	
				A 15					
A 41A	5	SHLD A41	37N			P2-T	22N	27	
A 41B		SHLD A41				P3-E SHLD	N	25 33 34	
A 41W		P2-U	22N	27		P3-E	18	32	
A 42	4	P2-S	22N	27		P3-F	22N	35	
A 43	29		230 200	30 31	5		56	A 16	
				A 15					
A 43A	5	SHLD A43	37N			P2-W	22N	27	
A 43B		SHLD A43				P3-J SHLD	N	25 33 34	
A 43W		P2-V	22N	27		P3-J	18	32	
A 44	29		230 200	30 31	5		56	A 16	
				A 15					
A 44A	5	SHLD A44	37N			P2-Y	22N	27	
A 44B		SHLD A44				P3-M SHLD	N	25 33 34	

[1] THE STD CONDUCTOR TERMINATION FIGURES ARE PER
[2] DIMENSIONS ARE IN INCHES AND TWO PLACE DECIMALS.

MIL 2085 - 4-63 WIR

MANNED SPACECRAFT CENTER HOUSTON, TEXAS | SIZE A | 1900956

SCALE - NONE | REV LTR B | SHEET 15 OF 18

GHR

CABLE W-56 B 1900956

CONDUCTOR INDIVIDUAL LENGTH NUMBER	ITEM NO. [2]	FROM CUT WIRE OR SHIELD STRIP WIRE OR JACKET CIRCUIT POINT [2]	TIN [2]	TERMINATION SPEC. [1] ITEM NO.	NO.	TO CUT WIRE OR SHIELD STRIP WIRE OR JACKET CIRCUIT POINT [2]	TIN [2]	TERMINATION SPEC [1] ITEM NO.	NO.
				A 17					
A 28A	5	SHLD A28				E3	37N		
A 28L		P1-GG		26		P2-GG	22N	27	
A 28R		P1-FF		26		P2-FF	22N	27	
A 29	3		430 400	9 10	5		430 400	A 16	7A
				A 15					
A 29A	5	SHLD A29	22N			E4	37N		
A 29W		P1-HH	22N	26		P2-HH	22N	27	
A 30	4	P1-A*	22N	26		P2-A*	22N	27	
A 31		DELETED							
A 32	2		430 400	11 12	5		430 400	A 18	7A
				A 17					
A 32A	5	SHLD A32	22N			E4	37N		
A 32L		P1-KK	22N	26		P2-KK	22N	27	
A 32R		P1-JJ	22N	26		P2-JJ	22N	27	
A 33	2		430 400	11 12	5		430 400	A 18	7A
				A 17					
A 33A	5	SHLD A33				E4	37N		

[1] THE STD CONDUCTOR TERMINATION FIGURES ARE PER
[2] DIMENSIONS ARE IN INCHES AND TWO PLACE DECIMALS.

MIL 2085 - 4-63 WIR

MANNED SPACECRAFT CENTER HOUSTON, TEXAS | SIZE A | 1900956

SCALE - NONE | REV LTR B | SHEET 13 OF 18

GHR

CABLE W-56 B 1900956

CONDUCTOR INDIVIDUAL LENGTH NUMBER	ITEM NO. [2]	FROM CUT WIRE OR SHIELD STRIP WIRE OR JACKET CIRCUIT POINT [2]	TIN [2]	TERMINATION SPEC. [1] ITEM NO.	NO.	TO CUT WIRE OR SHIELD STRIP WIRE OR JACKET CIRCUIT POINT [2]	TIN [2]	TERMINATION SPEC [1] ITEM NO.	NO.
A 44W		P2-X	22N	27		P3-M	18	32	
A 45		P2-Z	22N	27		P3-D	22N	35	
A 46	29		330 300	30 31	5		56	A 16	
				A 15					
A 46A	5	SHLD A46	37N			P2-EE	22N	27	
A 46B		SHLD A46				P4-E SHLD	N	25 33 34	
A 46W		P2-DD	22N	27		P4-E	18	32	
A 47	29		330 300	30 31	5		56	A 16	
				A 15					
A 47A	5	SHLD A47	37N		5	P2-CC	22N	27	
A 47B		SHLD A47				P4-J SHLD	N	25 33 34	
A 47W		P2-BB	22N	27		P4-J	18	32	
A 48	29		330 300	30 31	5		56	A 16	
				A 15					
A 48A	5	SHLD A48	37N			P2-K	22N	27	
A 48B		SHLD A48				P5-J SHLD	N	25 33 34	
A 48W		P2-J	22N	27		P5-J	18	32	
A 49	29		330 300	30 31	5		56	A 16	

[1] THE STD CONDUCTOR TERMINATION FIGURES ARE PER
[2] DIMENSIONS ARE IN INCHES AND TWO PLACE DECIMALS.

MIL 2085 - 4-63 WIR

MANNED SPACECRAFT CENTER HOUSTON, TEXAS | SIZE A | 1900956

SCALE - NONE | REV LTR B | SHEET 16 OF 18

GHR CABLE W-56 B 1900956

CONDUCTOR			FROM					TO				
INDIVIDUAL LENGTH			CUT WIRE OR SHIELD			TERMINATION SPEC. 1	NO.	CUT WIRE OR SHIELD			TERMINATION SPEC 1	NO.
NUMBER	ITEM NO. 2		STRIP WIRE OR JACKET / CIRCUIT POINT 2	T I N 2		ITEM NO.		STRIP WIRE OR JACKET / CIRCUIT POINT 2	T I N 2		ITEM NO.	
						A 15						
A 49A	5		SHLD A49	37N				P2-M	22N		27	
A 49B			SHLD A49					P5-M SHLD	N	25	33 34	
A 49W			P2-L	22N		27		P5-M	18		32	
A 50	4		P2-U*	22N		27		P5-B	22N		35	
A 51	4		P2-H	22N		27		P5-E	22N		35	

1 THE STD CONDUCTOR TERMINATION FIGURES ARE PER

2 DIMENSIONS ARE IN INCHES AND TWO PLACE DECIMALS.

MIL 2085 - 4-63 WIR

MANNED SPACECRAFT CENTER HOUSTON, TEXAS	SIZE A	1900956	
SCALE - NONE	REV LTR B		SHEET 17 OF 18

REVISIONS					
SYM	ZONE	DESCRIPTION	CHG NO.	DATE	APPD.
C		ADDED PER TDER 15406			

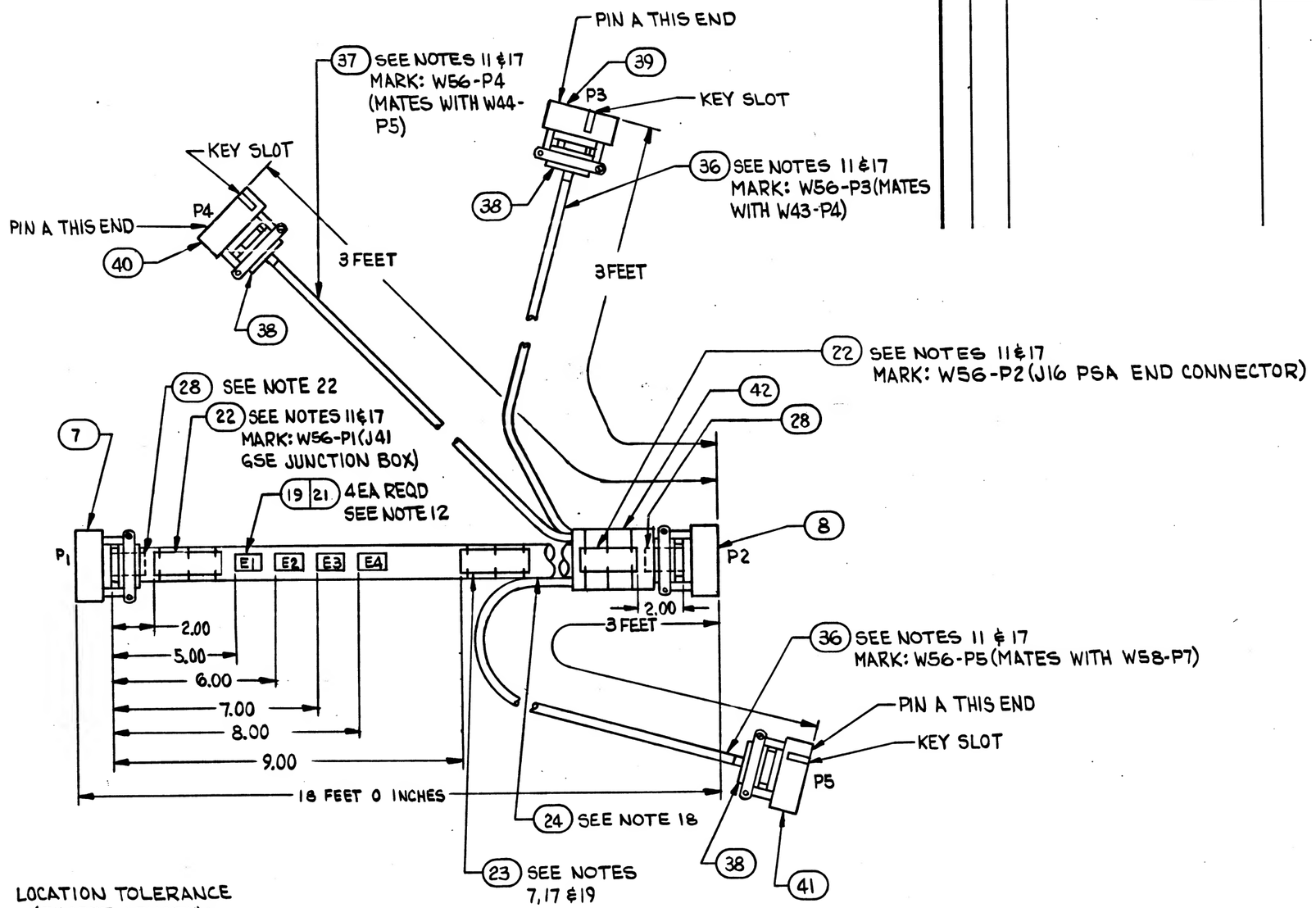

LOCATION TOLERANCE
(EXCEPT LENGTH):
±.50

NEXT ASSY	USED ON
APPLICATION	

UNLESS OTHERWISE SPECIFIED
DIMENSIONS ARE IN INCHES
TOLERANCES ON

FRACTIONS	DECIMALS	ANGLES
+ −	+ −	+ −
− −	− −	− −

DO NOT SCALE THIS DRAWING

MATERIAL

CONTRACT NAS 9-497

AC SPARK PLUG DIVISION, GMC
MILWAUKEE, WISCONSIN

ACSP PN

DRAWN KOSMATKA DATE 25 OCT 63
CHECKED M. MANNING 4 NOV 63
APPROVAL N. ABRAHAM 5 NOV 63
APPROVAL J. M. Watson JAN 5 '65
NASA APPROVAL G. G. Mitty JAN 1 2 1965
MIT APPROVAL W. Kupfer 26 Jan 65

MANNED
SPACECRAFT CENTER
HOUSTON, TEXAS

CABLE INTERCONNECT W56
OSS TESTING

CODE IDENT NO. | SIZE C | 1900956

SCALE NONE | SHEET 18 OF 18

MIL 1077C—P

APPLICATION		REVISIONS TDRR 04812				
NEXT ASSY	USED ON	SYM	DESCRIPTION	DATE	APPROVAL	
1901308	1900005-011 (M)	A	CHANGE IN ACCORDANCE WITH CM-193764 TDRR 09121	6 FEB 64		
		B	CHANGE IN ACCORDANCE WITH CM-302646 TDRR 15405	15 SEP 64		EF
		C	REVISED PER CM 304876 TDRR 15406	27 NOV 64	J J J	
		D	REVISED PER CM 305321 TDRR 15761	11 DEC 64		
		E	REPLACED WITH CHANGE BY REVISION F PER TDRR 22614	1 OCT 65	JWP	EF

(E) REPLACED WITH CHANGE BY REV F

REV																				
SHEET																				
REV STATUS OF SHEETS	REV	E	B	B	B	B	D	B	B	B	B	B	B	B	B	B	B	C		
	SHEET	1	2	3	4	5	6	7	8	9	10	11	12	13	14	15	16	17	18	

AC SPARK PLUG DIVISION, GMC
MILWAUKEE, WISCONSIN

ACSP PN

MANNED
SPACECRAFT CENTER
HOUSTON, TEXAS

DRAWN DATE 25 Oct 63
CHECKED 4 NOV 63
APPROVAL 5 NOV 63
APPROVAL 11/22/63

CABLE INTERCONNECT W56
OSS TESTING

NASA APPROVAL 11-26-63
MIT APPROVAL

CODE IDENT NO.	SIZE		REV
	A	1900956	E

CONTRACT NAS9-497 SCALE NONE SHEET 1 OF 18

PENNANT NOTE — GENERAL NOTES

1 SEE CONDUCTOR CHART

2 SEE CONDUCTOR CHART

3 INTERPRET DRAWING IN ACCORDANCE WITH STANDARDS PRESCRIBED BY MIL-D-70327.

4 MARK CONDUCTOR IDENTIFICATION ON SINGLE CONDUCTORS PER ND1002019 OMITTING ALL SUFFIX LETTERS EXCEPT A AND B.

5 SPACING OF CONDUCTOR IDENTIFICATION SHALL BE EVERY 15 INCHES MAX. AND AT EACH TERMINATION.

6 SPIRALLING OF THE MARKING IS ALLOWED.

7 IDENTIFY USING DRAWING NO. AND REVISION LETTER PER MIL-STD-130 (ES-267). .12 INCH HIGH CHARACTERS BLACK.

8 Y OR N IN TINNED COLUMN INDICATES YES OR NO.

9 A LETTER WITH AN ASTERISK SUFFIX INDICATES A LOWER CASE LETTER.

10 VENDOR ITEM - SEE SPECIFICATION CONTROL DRAWING.

11 MARK IDENTIFICATION BAND WITH REFERENCE DESIGNATION AS NOTED .12 INCH HIGH COLOR BLACK. HOT IMPRESSION STAMPING PER ND1002019. CENTRALIZE.

12 MARK SLEEVING WITH REFERENCE DESIGNATION AS SHOWN .12 INCH HIGH. COLOR BLACK PER ND1002019.

13 MARK SLEEVING OF MULTI-CONDUCTORS WITH THE CONDUCTOR NUMBER .12 INCH HIGH. COLOR BLACK. PER ND1002019 WHEN SLEEVING ITEM NUMBERS FOLLOW AN A OR T IN THE ACCESSORIES ITEM NUMBER FIELD.

PENNANT NOTE — GENERAL NOTES

14 A OR T PREFIX IN THE ACCESSORIES ITEM NUMBER COLUMN INDICATES THE READING POSITION AWAY FROM TERMINATION OR TOWARD TERMINATION RESPECTIVELY. OF THE WIRE MARKER SLEEVE.

15 THE SUFFIX LETTER OF A CONDUCTOR IDENTIFICATION NUMBER INDICATES CONDUCTOR SHIELDING. COLOR. OR MARKING.
- A - FROM END SHIELD
- L - WHITE WITH BLUE TRACER OR LETTER L
- R - WHITE WITH RED TRACER OR LETTER R
- Y - WHITE WITH YELLOW TRACER OR LETTER Y
- W - WHITE

16 ASSEMBLE CONTACTS IN ALL CONNECTOR GROMMET HOLES.

17 SECURE TO CABLE USING ITEM 25. MARKING TO READ AWAY FROM CONNECTOR.

18 SEAL ZIPPER TUBING PER ND1002153.

19 SERIALIZE PER ND1002023.

20 ITEM 26 FURNISHED WITH ITEM 7

21 ITEM 27 FURNISHED WITH ITEM 8

22 ITEM 28 SHALL BE SHORTENED WHEN NECESSARY TO AVOID INTERFERENCE WITH FERRULES AND MAY BE CUT LENGTHWISE ON ONE SIDE. SELECT ONE OR MORE OF ITEM 28 AS REQUIRED TO FIT.

PENNANT NOTE — GENERAL NOTES

TOLERANCE CHART. UNLESS OTHERWISE SPECIFIED ---

APPLICABLE LENGTH FOR WIRE OR CABLE. STRIP WIRE. STRIP JACKET. CUT WIRE OR CUT SHIELD.	TOLERANCE				
	WIRE OR CABLE	STRIP WIRE	STRIP JACKET	CUT WIRE	CUT SHIELD
UNDER 1 INCH	+ .06-.00	+.03-.00	+.06-.06	+.06-.06	+.06-.06
1 INCH TO 6 INCHES	+ .50-.00	+.06-.00	+.25-.25	+.25-.25	+.25-.25
6 INCHES TO 6 FEET	+1.00-.00		+.50-.50	+.50-.50	+.50-.50
OVER 6 FEET	+2.00-.00				

PENNANT NOTE — LIST OF MATERIALS

NOTE	ITEM	QTY	PART NO	DESCRIPTION
	1			DELETED 1900956-001
	2	1	1900956-002	WIRE ND1002181 TYPE 2 CLASS 4. WHT. JKT.. 20AWG WHT/BLU. WHT/RED. 198 FT. TOTAL LENGTH
	3	1	1900956-003	WIRE ND1002181 TYPE 1 CLASS 4. WHT. JKT.. 20AWG WHT.. 48 FT. TOTAL LENGTH
	4	1	1900956-004	WIRE ND1002181 TYPE 1 CLASS 1. 20AWG. WHITE. 198 FT. TOTAL LENGTH
	5	1	1900956-005	WIRE ND1002181 TYPE 1 CLASS 1. 22AWG. WHITE. 12 FT. TOTAL LENGTH
	6	1	1900956-006	WIRE ND1002181 TYPE 2 CLASS 1. T2. 20AWG. WHITE (CONDUCTORS MARKED R AND L RESPECTIVELY) 55 FT. TOTAL LENGTH
16	7	1	MS3126F24-61P	(1897047-610) CONNECTOR-PLUG
16	8	1	MS3126F24-61S	(1897048-610) CONNECTOR-PLUG
10	9	2	1000243-004	FERRULE ELEC. COND.
10	10	2	1000242-004	FERRULE ELEC. COND.
10	11	11	1000243-011	FERRULE ELEC. COND.
10	12	11	1000242-009	FERRULE ELEC. COND.
	13			DELETED 1000243-015
	14			DELETED 1000242-016
10	15	10	1010490-198	INSULATION-SLEEVING. ELEC.

PENNANT LIST OF MATERIALS

NOTE	ITEM	QTY	PART NO	DESCRIPTION
10	16	10	1010490-200	INSULATION-SLEEVING ELEC.
10	17	11	1010490-194	INSULATION-SLEEVING ELEC.
10	18	11	1010490-196	INSULATION-SLEEVING ELEC.
10	19	4	1010490-256	INSULATION-SLEEVING ELEC.
10	20	6	1010490-188	INSULATION-SLEEVING ELEC.
10	21	4	1016006-003	SPLICE REDUCER
10	22	2	1016128-041	BAND-IDENTIFICATION
10	23	1	1016128-011	BAND-IDENTIFICATION
	24	1	1900956-007	ZIPPER TUBING ND1002155 TYPE 1, PLASTIC, FLEXIBLE 1.125 DIA. 18 FT. TOTAL LENGTH
	25	AR	MIL-T-713	LACING TAPE TYPE P, CLASS 2 BLACK (ES-2732 NO. 18)
20	26			CONTACT PINS
21	27			CONTACT, SOCKETS
22	28	AR	1897147-112,	-116 CABLE CLAMP SLEEVE
	29	1	1900956-008	WIRE COAXIAL MIL-L 17/69A 188A/U, 24 FT TOT. LG
	30	8	1000243-006	FERRULE ELECT. COND.
	31	8	1000242-005	FERRULE ELECT. COND.
	32	8	1016369-188	INNER MALE PIN

MANNED SPACECRAFT CENTER HOUSTON, TEXAS | SIZE A | 1900956
SCALE-NONE | REV LTR B | SHEET 6 OF 18

PENNANT LIST OF MATERIALS

NOTE	ITEM	QTY	PART NO	DESCRIPTION
	33	8	1016369-488	OUTER FEMALE BODY
	34	8	1016369-588	HYRING
	35	4	1016369-421	CONTACT SOCKETS
	36	2	1900956-009	TUBING, MODIFIED POLYVINYL CHLORIDE, FLEXIBLE SHRINK-FIT PER 1016197-007, 3 FEET TOTAL LENGTH
	37	1	1900956-010	TUBING, MODIFIED POLYVINYL CHLORIDE, FLEXIBLE SHRINK-FIT PER 1016197-006 3 FEET TOTAL LENGTH.
	38	3	1016369-141	SOCKET BODY CONNECTOR
	39	1	1902170-004	POLARIZING SHELL
	40	1	1902170-005	POLARIZING SHELL
	41	1	1902170-003	POLARIZING SHELL
	42	1	1900956-011	ZIPPER TUBING ND 1002155, TYPE I PLASTIC FLEXIBLE, 2 IN. DIA., 5 IN. TOT. LENGTH

MANNED SPACECRAFT CENTER HOUSTON, TEXAS | SIZE A | 1900956
SCALE-NONE | REV LTR D | SHEET 7 OF 18

MIL 2088 4-63

CONDUCTOR INDIVIDUAL LENGTH NUMBER	ITEM NO.	2>	FROM CUT WIRE OR SHIELD STRIP WIRE OR JACKET CIRCUIT POINT	2>	TIN 2>	TERMINATION SPEC. 1> ITEM NO.	NO.	TO CUT WIRE OR SHIELD STRIP WIRE OR JACKET CIRCUIT POINT	2>	TIN 2>	TERMINATION SPEC. 1> ITEM NO.	NO.
A 1	6					A 20					A 20	
A 1L			P1-C	22N		26		P2-C	22N		27	
A 1R			P1-B	22N		26		P2-B	22N		27	
A 2	6					A 20					A 20	
A 2L			P1-E	22N		26		P2-E	22N		27	
A 2R			P1-D	22N		26		P2-D	22N		27	
A 3	6					A 20					A 20	
A 3L			P1-G	22N		26		P2-G	22N		27	
A 3R			P1-F	22N		26		P2-F	22N		27	
A 4	4		P1-N	22N		26		P2-N	22N		27	
A 5	4		P1-P	22N		26		P2-P	22N		27	
A 6	4		P1-R	22N		26		P2-R	22N		27	
A 7			DELETED									
A 7A			DELETED									
A 7L			DELETED									
A 7R			DELETED									
A 8			DELETED									
A 8A			DELETED									

1> THE STD CONDUCTOR TERMINATION FIGURES ARE PER
2> DIMENSIONS ARE IN INCHES AND TWO PLACE DECIMALS.

MANNED SPACECRAFT CENTER HOUSTON, TEXAS | SIZE A | 1900956
SCALE-NONE | REV LTR B | SHEET 8 OF 18

MIL 2088 4-63 WIN

CONDUCTOR INDIVIDUAL LENGTH NUMBER	ITEM NO.	2>	FROM CUT WIRE OR SHIELD STRIP WIRE OR JACKET CIRCUIT POINT	2>	TIN 2>	TERMINATION SPEC. 1> ITEM NO.	NO.	TO CUT WIRE OR SHIELD STRIP WIRE OR JACKET CIRCUIT POINT	2>	TIN 2>	TERMINATION SPEC. 1> ITEM NO.	NO.
A 8W			DELETED									
A 9			DELETED									
A 9A			DELETED									
A 9L			DELETED									
A 9R			DELETED									
A 10			DELETED									
A 10A			DELETED									
A 10L			DELETED									
A 10R			DELETED									
A 11			DELETED									
A 11A			DELETED									
A 11W			DELETED									
A 12	4		P1-B*	22N		26		P2-B*	22N		27	
A 13	2			280	250	11 12	5		280	250	A 18	7A
						A 17						
A 13A	5		SHLD A13	22N				E2	37N			
A 13L			P1-D*	22N		26		P2-D*	22N		27	
A 13R			P1-C*	22N		26		P2-C*	22N		27	

1> THE STD CONDUCTOR TERMINATION FIGURES ARE PER
2> DIMENSIONS ARE IN INCHES AND TWO PLACE DECIMALS.

MANNED SPACECRAFT CENTER HOUSTON, TEXAS | SIZE A | 1900956
SCALE-NONE | REV LTR B | SHEET 9 OF 18

MIL 2088 4-63 WIN

CONDUCTOR NUMBER	INDIVIDUAL LENGTH ITEM NO. (2)	FROM CUT WIRE OR SHIELD STRIP WIRE OR JACKET CIRCUIT POINT	(2)	TIN (2)	TERMINATION SPEC. (1)	ITEM NO.	NO.	TO CUT WIRE OR SHIELD STRIP WIRE OR JACKET CIRCUIT POINT	(2)	TIN (2)	TERMINATION SPEC. (1)	ITEM NO.	NO.
A 14	2		280	250	11 12		5		280	250	A 18		7A
					A 17								
A 14A	5	SHLD A14	22N					E2	37N				
A 14L		P1-F*	22N		26			P2-F*	22N		27		
A 14R		P1-E*	22N		26			P2-E*	22N		27		
A 15	2		280	250	11 12		5		280	250	A 18		7A
					A 17								
A 15A	5	SHLD A15	22N					E2	37N				
A 15L		P1-H*	22N		26			P2-H*	22N		27		
A 15R		P1-G*	22N		26			P2-G*	22N		27		
A 16	2		280	250	11 12		5		280	250	A 18		7A
					A 17								
A 16A	5	SHLD A16	22N					E2	37N				
A 16L		P1-J*	22N		26			P2-J*	22N		27		
A 16R		P1-I*	22N		26			P2-I*	22N		27		
A 17		DELETED											
A 17A		DELETED											
A 17L		DELETED											

(1) THE STD CONDUCTOR TERMINATION FIGURES ARE PER
(2) DIMENSIONS ARE IN INCHES AND TWO PLACE DECIMALS.

MANNED SPACECRAFT CENTER HOUSTON, TEXAS | SIZE A | 1900956
SCALE - NONE | REV LTR B | SHEET 10 OF 18

MIL 2069 - 4-63 WIR

CONDUCTOR NUMBER	INDIVIDUAL LENGTH ITEM NO. (2)	FROM CUT WIRE OR SHIELD STRIP WIRE OR JACKET CIRCUIT POINT	(2)	TIN (2)	TERMINATION SPEC. (1)	ITEM NO.	NO.	TO CUT WIRE OR SHIELD STRIP WIRE OR JACKET CIRCUIT POINT	(2)	TIN (2)	TERMINATION SPEC. (1)	ITEM NO.	NO.
A 17R		DELETED											
A 18	2		330	300	11 12		5		330	300	A 18		7A
					A 17								
A 18A	5	SHLD A18	22N					E2	37N				
A 18L		P1-P*	22N		26			P2-P*	22N		27		
A 18R		P1-N*	22N		26			P2-N*	22N		27		
A 19		DELETED											
A 19A		DELETED											
A 19L		DELETED											
A 19R		DELETED											
A 20	2		330	300	11 12		5		330	300	A 18		7A
					A 17								
A 20A	5	SHLD A20	22N					E3	37N				
A 20L		P1-T*	22N		26			P2-T*	22N		27		
A 20R		P1-S*	22N		26			P2-S*	22N		27		
A 21		DELETED											
A 22	4	[redacted] P2-V*	22N		26			P1-V*	22N		26		
A 23	4	[redacted] P2-W*	22N		26			P1-W*	22N		26		

(1) THE STD CONDUCTOR TERMINATION FIGURES ARE PER
(2) DIMENSIONS ARE IN INCHES AND TWO PLACE DECIMALS.

MANNED SPACECRAFT CENTER HOUSTON, TEXAS | SIZE A | 1900956
SCALE - NONE | REV LTR B | SHEET 11 OF 18

MIL 2069 - 4-63 WIR

CONDUCTOR NUMBER	INDIVIDUAL LENGTH ITEM NO. (2)	FROM CUT WIRE OR SHIELD STRIP WIRE OR JACKET CIRCUIT POINT	(2)	TIN (2)	TERMINATION SPEC. (1)	ITEM NO.	NO.	TO CUT WIRE OR SHIELD STRIP WIRE OR JACKET CIRCUIT POINT	(2)	TIN (2)	TERMINATION SPEC. (1)	ITEM NO.	NO.
A 24	3		380	350	9 10		5		380	350	A 16		7A
					A 15								
A 24A	5	SHLD A24	22					E3	37N				
A 24W		P1-X*	22		26			P2-X*	22N		27		
A 25	2		380	350	11 12		5		380	350	A 18		7A
					A 17								
A 25A	5	SHLD A25	22N					E3	37N				
A 25L		P1-Z*	22N		26			P2-Z*	22N		27		
A 25R		P1-Y*	22N		26			P2-Y*	22N		27		
A 26		DELETED											
A 26A		DELETED											
A 26L		DELETED											
A 26R		DELETED											
A 27		DELETED											
A 27A		DELETED											
A 27L		DELETED											
A 27R		DELETED											
A 28	2		430	400	11 12				430	400	A 18		7A

(1) THE STD CONDUCTOR TERMINATION FIGURES ARE PER
(2) DIMENSIONS ARE IN INCHES AND TWO PLACE DECIMALS.

MANNED SPACECRAFT CENTER HOUSTON, TEXAS | SIZE A | 1900956
SCALE - NONE | REV LTR B | SHEET 12 OF 18

MIL 2069 - 4-63 WIR

CONDUCTOR NUMBER	INDIVIDUAL LENGTH ITEM NO. (2)	FROM CUT WIRE OR SHIELD STRIP WIRE OR JACKET CIRCUIT POINT	(2)	TIN (2)	TERMINATION SPEC. (1)	ITEM NO.	NO.	TO CUT WIRE OR SHIELD STRIP WIRE OR JACKET CIRCUIT POINT	(2)	TIN (2)	TERMINATION SPEC. (1)	ITEM NO.	NO.
						A 17							
A 28A	5	SHLD A28						E3	37N				
A 28L		P1-GG			26			P2-GG	22N		27		
A 28R		P1-FF			26			P2-FF	22N		27		
A 29	3		430	400	9 10		5		430	400	A 16		7A
					A 15								
A 29A	5	SHLD A29	22N					E4	37N				
A 29W		P1-HH	22N		26			P2-HH	22N		27		
A 30	4	P1-A*	22N		26			P2-A*	22N		27		
A 31		DELETED											
A 32	2		430	400	11 12		5		430	400	A 18		7A
					A 17								
A 32A	5	SHLD A32	22N					E4	37N				
A 32L		P1-KK	22N		26			P2-KK	22N		27		
A 32R		P1-JJ	22N		26			P2-JJ	22N		27		
A 33	2		430	400	11 12		5		430	400	A 18		7A
					A 17								
A 33A	5	SHLD A33						E4	37N				

(1) THE STD CONDUCTOR TERMINATION FIGURES ARE PER
(2) DIMENSIONS ARE IN INCHES AND TWO PLACE DECIMALS.

MANNED SPACECRAFT CENTER HOUSTON, TEXAS | SIZE A | 1900956
SCALE - NONE | REV LTR B | SHEET 13 OF 18

MIL 2069 - 4-63 WIR

CONDUCTOR NUMBER	INDIVIDUAL LENGTH ITEM NO.	2	FROM CUT WIRE OR SHIELD STRIP WIRE OR JACKET CIRCUIT POINT	2	TYPE	2	TERMINATION SPEC. 1	ITEM NO.	NO.	TO CUT WIRE OR SHIELD STRIP WIRE OR JACKET CIRCUIT POINT	2	TYPE	2	TERMINATION SPEC. 1	ITEM NO.	NO.
A 33L			P1-MM					26		P2-MM		22N			27	
A 33R			P1-LL					26		P2-LL		22N			27	
A 34	2			480		450	11	12			480		450	A	18	7A
							A	17								
A 34A	5		SHLD A34		22N					E4		22N				
A 34L			P1-AA		22N			26		P2-AA		22N			27	
A 34R			P1-NN		22N			26		P2-NN		22N			27	
A 35			DELETED													
A 35A			DELETED													
A 35L			DELETED													
A 35R			DELETED													
A 35Y			DELETED													
A 36	4		P1-H		22N			26		E1		22N				
A 37	4		E1		22N					E2		22N				
A 38	4		E2		22N					E3		22N				
A 39	4		E3		22N					E4		22N				
A 40	29			230		200	30	31	5			56		A	16	
							A	15								

1 THE STD CONDUCTOR TERMINATION FIGURES ARE PER
2 DIMENSIONS ARE IN INCHES AND TWO PLACE DECIMALS.

MANNED SPACECRAFT CENTER HOUSTON, TEXAS | SIZE A | 1900956
SCALE - NONE | REV LTR B | SHEET 14 OF 18

MIL 2089 - 4-63 WIN

CONDUCTOR NUMBER	INDIVIDUAL LENGTH ITEM NO.	2	FROM CUT WIRE OR SHIELD STRIP WIRE OR JACKET CIRCUIT POINT	2	TYPE	2	TERMINATION SPEC. 1	ITEM NO.	NO.	TO CUT WIRE OR SHIELD STRIP WIRE OR JACKET CIRCUIT POINT	2	TYPE	2	TERMINATION SPEC. 1	ITEM NO.	NO.
A 40A	5		SHLD A40		37N					P2-M*		22N			27	
A 40B			SHLD A40							P3-B SHLD		N	25	33	34	
A 40W			P2-K*		22N			27		P3-B		18			32	
A 41	29			230		200	30	31	5			56		A	1 6	
							A	15								
A 41A	5		SHLD A41		37N					P2-T		22N			27	
A 41B			SHLD A41							P3-E SHLD		N	25	33	34	
A 41W			P2-U		22N			27		P3-E		18			32	
A 42	4		P2-S		22N			27		P3-F		22N			35	
A 43	29			230		200	30	31	5			56		A	16	
							A	15								
A 43A	5		SHLD A43		37N					P2-W		22N			27	
A 43B			SHLD A43							P3-J SHLD		N	25	33	34	
A 43W			P2-V		22N			27		P3-J		18			32	
A 44	29			230		200	30	31	5			56		A	16	
							A	15								
A 44A	5		SHLD A44		37N					P2-Y		22N			27	
A 44B			SHLD A44							P3-M SHLD		N	25	33	34	

1 THE STD CONDUCTOR TERMINATION FIGURES ARE PER
2 DIMENSIONS ARE IN INCHES AND TWO PLACE DECIMALS.

MANNED SPACECRAFT CENTER HOUSTON, TEXAS | SIZE A | 1900956
SCALE - NONE | REV LTR B | SHEET 15 OF 18

MIL 2089 - 4-63 WIN

CONDUCTOR NUMBER	INDIVIDUAL LENGTH ITEM NO.	2	FROM CUT WIRE OR SHIELD STRIP WIRE OR JACKET CIRCUIT POINT	2	TYPE	2	TERMINATION SPEC. 1	ITEM NO.	NO.	TO CUT WIRE OR SHIELD STRIP WIRE OR JACKET CIRCUIT POINT	2	TYPE	2	TERMINATION SPEC. 1	ITEM NO.	NO.
A 44W			P2-X		22N			27		P3-M		18			32	
A 45			P2-Z		22N			27		P3-D		22N			35	
A 46	29			330		300	30	31	5			56		A	16	
							A	15								
A 46A	5		SHLD A46		37N					P2-EE		22N			27	
A 46B			SHLD A46							P4-E SHLD		N	25	33	34	
A 46W			P2-DD		22N			27		P4-E		18			32	
A 47	29			330		300	30	31	5			56		A	16	
							A	15								
A 47A	5		SHLD A47		37N				5	P2-CC		22N			27	
A 47B			SHLD A47							P4-J SHLD		N	25	33	34	
A 47W			P2-BB		22N			27		P4-J		18			32	
A 48	29			330		300	30	31	5			56		A	16	
							A	15								
A 48A	5		SHLD A48		37N					P2-K		22N			27	
A 48B			SHLD A48							P5-J SHLD		N	25	33	34	
A 48W			P2-J		22N			27		P5-J		18			32	
A 49	29			330		300	30	31	5			56		A	16	

1 THE STD CONDUCTOR TERMINATION FIGURES ARE PER
2 DIMENSIONS ARE IN INCHES AND TWO PLACE DECIMALS.

MANNED SPACECRAFT CENTER HOUSTON, TEXAS | SIZE A | 1900956
SCALE - NONE | REV LTR B | SHEET 16 OF 18

MIL 2089 - 4-63 WIN

CONDUCTOR NUMBER	INDIVIDUAL LENGTH ITEM NO.	2	FROM CUT WIRE OR SHIELD STRIP WIRE OR JACKET CIRCUIT POINT	2	TYPE	2	TERMINATION SPEC. 1	ITEM NO.	NO.	TO CUT WIRE OR SHIELD STRIP WIRE OR JACKET CIRCUIT POINT	2	TYPE	2	TERMINATION SPEC. 1	ITEM NO.	NO.
							A	15								
A 49A	5		SHLD A49		37N					P2-M		22N			27	
A 49B			SHLD A49							P5-M SHLD		N	25	33	34	
A 49W			P2-L		22N			27		P5-M		18			32	
A 50	4		P2-U*		22N			27		P5-B		22N			35	
A 51	4		P2-H		22N			27		P5-E		22N			35	

1 THE STD CONDUCTOR TERMINATION FIGURES ARE PER
2 DIMENSIONS ARE IN INCHES AND TWO PLACE DECIMALS.

MANNED SPACECRAFT CENTER HOUSTON, TEXAS | SIZE A | 1900956
SCALE - NONE | REV LTR B | SHEET 17 OF 18

MIL 2089 - 4-63 WIN

1900956

REVISIONS					
SYM	ZONE	DESCRIPTION	CHG NO.	DATE	APPD.
C		ADDED PER TDRR 15406			

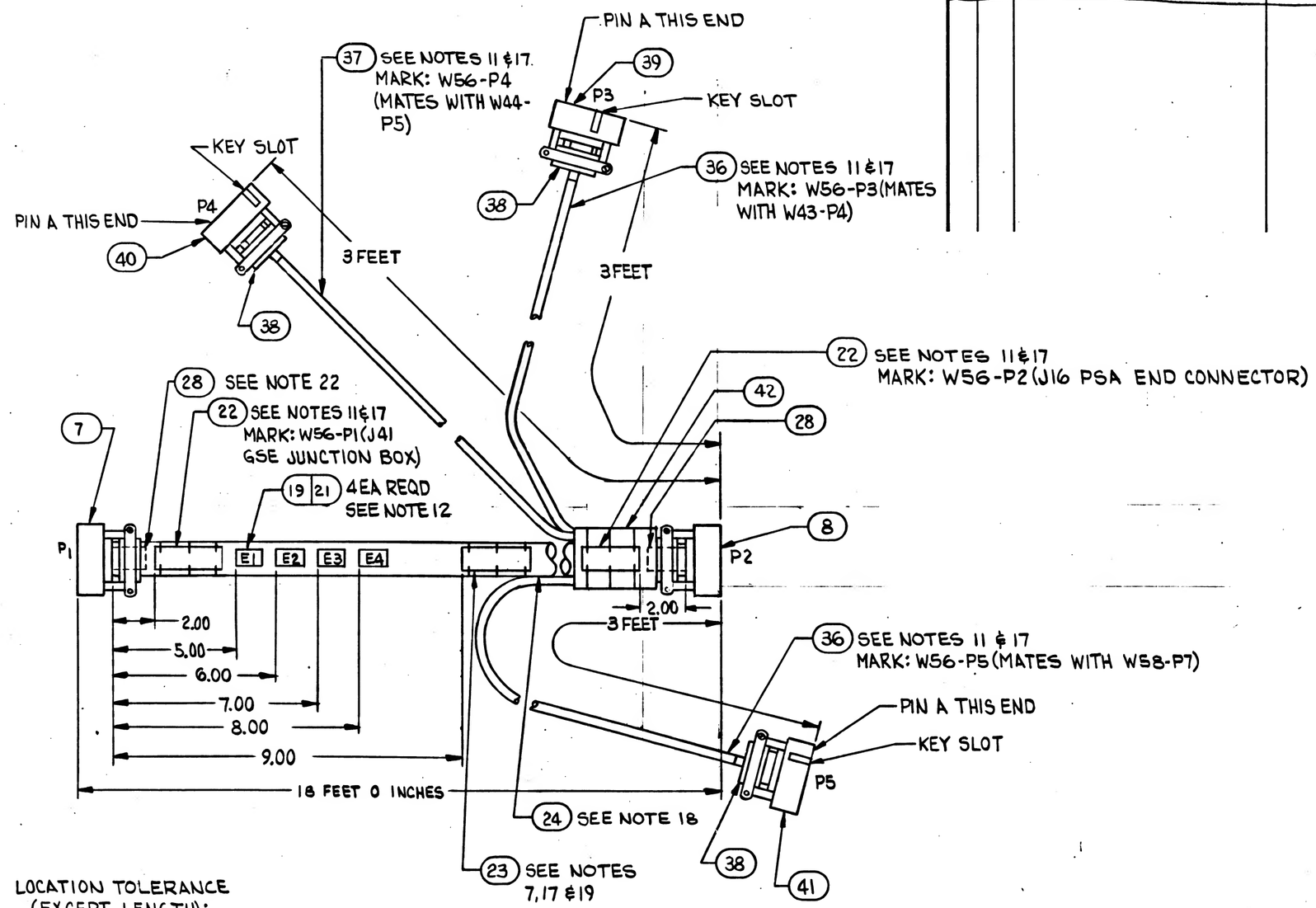

LOCATION TOLERANCE (EXCEPT LENGTH): ±.50

NEXT ASSY	USED ON
APPLICATION	

UNLESS OTHERWISE SPECIFIED DIMENSIONS ARE IN INCHES TOLERANCES ON

FRACTIONS	DECIMALS	ANGLES
+ −	+ −	+ −
− −	− −	− −

DO NOT SCALE THIS DRAWING

MATERIAL

CONTRACT NAS 9-497

AC SPARK PLUG DIVISION, GMC
MILWAUKEE, WISCONSIN

ACSP PN

DRAWN KOSMATKA DATE 25 OCT 63
CHECKED M. MANNING 4 NOV 63
APPROVAL N. ABRAHAM 5 NOV 63
APPROVAL J. M. Watson Jan 5, 65
NASA APPROVAL
MIT APPROVAL

MANNED SPACECRAFT CENTER
HOUSTON, TEXAS

CABLE INTERCONNECT W56
OSS TESTING

CODE IDENT NO. | SIZE C | 1900956

SCALE NONE | SHEET 18 OF 18

MIL 1077C-P

GENERAL NOTES

NOTES

1 SEE CONDUCTOR CHART

2 SEE CONDUCTOR CHART

3 INTERPRET DRAWING IN ACCORDANCE WITH STANDARDS PRESCRIBED BY MIL-D-70327.

4 MARK CONDUCTOR IDENTIFICATION ON SINGLE CONDUCTORS PER ND1002019 OMITTING ALL SUFFIX LETTERS EXCEPT A AND B.

5 SPACING OF CONDUCTOR IDENTIFICATION SHALL BE EVERY 15 INCHES MAX AND AT EACH TERMINATION.

6 SPIRALLING OF THE MARKING IS ALLOWED.

7 IDENTIFY USING DRAWING NO. AND REVISION LETTER PER MIL-STD-130 (ES-267). .12 INCH HIGH CHARACTERS BLACK.

8 Y OR N IN TINNED COLUMN INDICATES YES OR NO.

9 A LETTER WITH AN ASTERISK SUFFIX, INDICATES A LOWER CASE LETTER.

10 VENDOR ITEM - SEE SPECIFICATION CONTROL DRAWING.

11 MARK IDENTIFICATION BAND WITH REFERENCE DESIGNATION AS NOTED .12 INCH HIGH COLOR BLACK, HOT IMPRESSION STAMPING PER ND1002019. CENTRALIZE.

MANNED SPACECRAFT CENTER HOUSTON, TEXAS	SIZE A	1900956	
SCALE - NONE	REV LTR +		SHEET 2 of 15

MIL 2734 4-63

GENERAL NOTES

NOTES

12 MARK SLEEVING WITH REFERENCE DESIGNATIONS AS SHOWN .12 INCH HIGH, COLOR BLACK PER ND1002019.

13 MARK SLEEVING OF MULTI-CONDUCTORS WITH THE CONDUCTOR NUMBER .12 INCH HIGH, COLOR BLACK, PER ND1002019 WHEN SLEEVING ITEM NUMBERS FOLLOW AN A OR T IN THE ACCESSORIES ITEM NUMBER FIELD.

14 A OR T PREFIX IN THE ACCESSORIES ITEM NUMBER COLUMN INDICATES THE READING POSITION AWAY FROM TERMINATION OR TOWARD TERMINATION RESPECTIVELY, OF THE WIRE MARKER SLEEVE.

15 THE SUFFIX LETTER OF A CONDUCTOR IDENTIFICATION NUMBER INDICATES CONDUCTOR SHIELDING, COLOR, OR MARKING.

A - FROM END SHIELD
L - WHITE WITH BLUE TRACER OR LETTER L
R - WHITE WITH RED TRACER OR LETTER R
Y - WHITE WITH YELLOW TRACER OR LETTER Y
W - WHITE

16 ASSEMBLE CONTACTS IN ALL CONNECTOR GROMMET HOLES.

17 SECURE TO CABLE USING ITEM 25. MARKING TO READ AWAY FROM CONNECTOR.

18 SEAL ZIPPER TUBING PER ND 1002153.

19 SERIALIZE PER ND 1002023.

MANNED SPACECRAFT CENTER HOUSTON, TEXAS	SIZE A	1900956	
SCALE - NONE	REV LTR +		SHEET 3 of 15

MIL 2084 4-63

FOR INFORMATION ONLY

CLASS B RELEASE TDR No. 0481 DATE 6/1/63

APPLICATION		REVISIONS			
NEXT ASSY	USED ON	SYM	DESCRIPTION	DATE	APPROVAL
1900005-011	1900005-011				

REV															
SHEET															
REV STATUS	REV	+	+	+	+	+	+	+	+	+	+	+	+	+	+
OF SHEETS	SHEET	1	2	3	4	5	6	7	8	9	10	11	12	13	14	15

MANNED SPACECRAFT CENTER HOUSTON, TEXAS

AC SPARK PLUG DIVISION, GMC MILWAUKEE, WISCONSIN

ACSP PN

CABLE INTERCONNECT W56
OSS TESTING

DRAWN [signature] DATE 25 Oct 63
CHECKED [signature] 4 Nov 63
APPROVAL [signature] 5 Nov 63
APPROVAL [signature] 11/12/63
NASA APPROVAL [signature] 11/26-63
MIT APPROVAL [signature]

CODE IDENT NO. 1900956 SIZE A REV +

SCALE NONE SHEET 1 OF 15

CONTRACT NAS9-497

GENERAL NOTES

TOLERANCE CHART, UNLESS OTHERWISE SPECIFIED ---

APPLICABLE LENGTH FOR WIRE OR CABLE, STRIP WIRE, STRIP JACKET, CUT WIRE OR CUT SHIELD	TOLERANCE				
	WIRE OR CABLE	STRIP WIRE	STRIP JACKET	CUT WIRE	CUT SHIELD
UNDER 1 INCH	+ .06-.00	+.03-.00	+.06-.06	+.06-.06	+.06-.06
1 INCH TO 6 INCHES	+ .50-.00	+.06-.00	+.25-.25	+.25-.25	+.25-.25
6 INCHES TO 6 FEET	+1.00-.00		+.50-.50	+.50-.50	+.50-.50
OVER 6 FEET	+2.00-.00				

MANNED SPACECRAFT CENTER HOUSTON, TEXAS	SIZE A	1900956	
SCALE - NONE	REV LTR +		SHEET 4 of 15

MIL 2084 4-63

INCHES 0 1 2
PHOTOGRAPHIC SCALE ONLY

LIST OF MATERIAL

SEE NOTE	ITEM	REQ'D	PART NUMBER	DESCRIPTION
10	16	4	1010490-200	INSULATION-SLEEVING ELEC
10	17	19	1010490-194	INSULATION-SLEEVING ELEC
10	18	19	1010490-196	INSULATION-SLEEVING ELEC
10	19	4	1010490-256	INSULATION-SLEEVING ELEC
10	20	6	1010490-188	INSULATION-SLEEVING ELEC
10	21	4	1016006-003	SPLICE REDUCER
10	22	2	1016128-041	BAND-IDENTIFICATION
10	23	1	1016128-011	BAND-IDENTIFICATION
	24	1	1900956-007	ZIPPER TUBING ND 1002155 TYPE I, PLASTIC, FLEXIBLE 1.00 DIA 18 FT TOTAL LENGTH
	25	AR	MIL-T-713	LACING TAPE TYPE P, CLASS 2 BLACK (ES-2732 NO. 18)

MANNED SPACECRAFT CENTER HOUSTON, TEXAS	SIZE A	1900956
SCALE-NONE	REV LTR +	SHEET 6 of 15

MIL 2084 4-63

6

GHR CABLE W 56 + 1900956

CONDUCTOR NUMBER	ITEM NO.	INDIVIDUAL LENGTH [2]	FROM CUT WIRE OR SHIELD STRIP WIRE OR JACKET CIRCUIT POINT	[2]	TIN [2]	TERMINATION SPEC. [1] ITEM NO.	NO.	TO CUT WIRE OR SHIELD STRIP WIRE OR JACKET CIRCUIT POINT	[2]	TIN [2]	TERMINATION SPEC [1] ITEM NO.	NO.
A 1	6					A 20					A 20	
A 1L			P1-C	22N				P2-C	22N			
A 1R			P1-B	22N				P2-B	22N			
A 2	6					A 20					A 20	
A 2L			P1-E	22N				P2-E	22N			
A 2R			P1-D	22N				P2-D	22N			
A 3	6					A 20					A 20	
A 3L			P1-G	22N				P2-G	22N			
A 3R			P1-F	22N				P2-F	22N			
A 4	4		P1-N	22N				P2-N	22N			
A 5	4		P1-P	22N				P2-P	22N			
A 6	4		P1-R	22N				P2-R	22N			
A 7	2			230	200	11 12	5		230	200	A 18	7A
						A 17						
A 7A	5		SHLD A7	22N				E1	37N			
A 7L			P1-T	22N				P2-T	22N			
A 7R			P1-U	22N				P2-U	22N			
A 8	3			230	200	9 10	5		230	200	A 16	7A

[1] THE STD CONDUCTOR TERMINATION FIGURES ARE PER
[2] DIMENSIONS ARE IN INCHES AND TWO PLACE DECIMALS.

MANNED SPACECRAFT CENTER HOUSTON, TEXAS	SIZE A	1900956
SCALE-NONE	REV LTR +	SHEET 7 OF 15

MIL 2085 - 4-63 WIR

LIST OF MATERIAL

SEE NOTE	ITEM	REQ'D	PART NUMBER	DESCRIPTION
	1	1	1900956-001	WIRE ND 1002181 TYPE 3, CLASS 4, WHT JACKET, 20 AWG,WHT/BLU,WHT/RED,WHT/YEL 18 FT TOT. LENGTH
	2	1	1900956-002	WIRE ND 1002181 TYPE 2, CLASS 4, WHT JACKET, 20 AWG,WHT/BLU,WHT/RED, 324 FT TOTAL LENGTH
	3	1	1900956-003	WIRE ND 1002181 TYPE 1, CLASS 4 WHT JACKET, 20 AWG, WHT, 72 FT TOTAL LENGTH
	4	1	1900956-004	WIRE ND 1002181 TYPE 1, CLASS 1, 20 AWG, WHITE, 198 FT TOTAL LENGTH
	5	1	1900956-005	WIRE ND 1002181 TYPE 1, CLASS 1, 22 AWG, WHITE, 12 FT TOTAL LENGTH
	6	1	1900956-006	WIRE ND 1002181 TYPE 2, CLASS 1, T2, 20 AWG, WHITE (CONDUCTORS MARKED R & L RESPECTIVELY) 55 FT TOTAL LENGTH
16	7	1	MS3126F24-61P	(1897047-610) CONNECTOR-PLUG
16	8	1	MS3126F24-61S	(1897048-610) CONNECTOR-PLUG
10	9	4	1000243-004	FERRULE ELEC COND.
10	10	4	1000242-004	FERRULE ELEC COND.
10	11	18	1000243-014	FERRULE ELEC COND.
10	12	18	1000242-012	FERRULE ELEC COND.
10	13	1	1000243-015	FERRULE ELEC COND.
10	14	1	1000242-016	FERRULE ELEC COND.
10	15	4	1010490-198	INSULATION-SLEEVING, ELEC

MANNED SPACECRAFT CENTER HOUSTON, TEXAS	SIZE A	1900956
SCALE-NONE	REV LTR +	SHEET 5 of 15

MIL 2084 4-63

5

GHR CABLE W 56 + 1900956

CONDUCTOR NUMBER	ITEM NO.	INDIVIDUAL LENGTH [2]	FROM CUT WIRE OR SHIELD STRIP WIRE OR JACKET CIRCUIT POINT	[2]	TIN [2]	TERMINATION SPEC. [1] ITEM NO.	NO.	TO CUT WIRE OR SHIELD STRIP WIRE OR JACKET CIRCUIT POINT	[2]	TIN [2]	TERMINATION SPEC [1] ITEM NO.	NO.
						A 15						
A 8A	5		SHLD A8	22N				E1	37N			
A 8W			P1-S	22N				P2-S	22N			
A 9	2			230	200	11 12	5		230	200	A 18	7A
						A 17						
A 9A	5		SHLD A9	22N				E1	37N			
A 9L			P1-W	22N				P2-W	22N			
A 9R			P1-V	22N				P2-V	22N			
A 10	2			230	200	11 12	5		230	200	A 18	7A
						A 17						
A 10A	5		SHLD A10	22N				E1	37N			
A 10L			P1-Y	22N				P2-Y	37N			
A 10R			P1-X	22N				P2-X	37N			
A 11	3			230	200	9 10	5		230	200	A 16	7A
						A 15						
A 11A	5		SHLD A11	22N				E1	37N			
A 11W			P1-Z	22N				P2-Z	22N			
A 12	4		P1-B*	22N				P2-B*	22N			

[1] THE STD CONDUCTOR TERMINATION FIGURES ARE PER
[2] DIMENSIONS ARE IN INCHES AND TWO PLACE DECIMALS.

MANNED SPACECRAFT CENTER HOUSTON, TEXAS	SIZE A	1900956
SCALE-NONE	REV LTR +	SHEET 8 OF 15

MIL 2085 - 4-63 WIR

INCHES 0 1 2
PHOTOGRAPHIC SCALE ONLY

GHR CABLE W 56 + 1900956

CONDUCTOR INDIVIDUAL LENGTH NUMBER	ITEM NO. (2)	FROM CUT WIRE OR SHIELD STRIP WIRE OR JACKET CIRCUIT POINT (2)	TIN (2)	TERMINATION SPEC. (1) ITEM NO.	NO.	TO CUT WIRE OR SHIELD STRIP WIRE OR JACKET CIRCUIT POINT (2)	TIN (2)	TERMINATION SPEC (1) ITEM NO.	NO.
A 16L		P1-J*	22N			P2-J*	22N		
A 16R		P1-I*	22N			P2-I*	22N		
A 17	2		330	300 11 12	5		330	300 A 18	7A
				A 17					
A 17A	5	SHLD A17	22N			E2	37N		
A 17L		P1-M*	22N			P2-M*	22N		
A 17R		P1-K*	22N			P2-K*	22N		
A 18	2		330	300 11 12	5		330	300 A 18	7A
				A 17					
A 18A	5	SHLD A18	22N			E2	37N		
A 18L		P1-P*	22N			P2-P*	22N		
A 18R		P1-N*	22N			P2-N*	22N		
A 19	2		330	300 11 12	5		330	300 A 18	7A
				A 17					
A 19A	5	SHLD A19	22N			E2	37N		
A 19L		P1-R*	22N			P2-R*	22N		
A 19R		P1-Q*	22N			P2-Q*	22N		
A 20	2		330	300 11 12	5		330	300 A 18	7A

(1) THE STD CONDUCTOR TERMINATION FIGURES ARE PER
(2) DIMENSIONS ARE IN INCHES AND TWO PLACE DECIMALS.

MANNED SPACECRAFT CENTER HOUSTON, TEXAS | SIZE A | 1900956
SCALE - NONE | REV LTR + | SHEET 10 OF 15

MIL 2085 - 4-63 WIR

GHR CABLE W 56 + 1900956

CONDUCTOR INDIVIDUAL LENGTH NUMBER	ITEM NO. (2)	FROM CUT WIRE OR SHIELD STRIP WIRE OR JACKET CIRCUIT POINT (2)	TIN (2)	TERMINATION SPEC. (1) ITEM NO.	NO.	TO CUT WIRE OR SHIELD STRIP WIRE OR JACKET CIRCUIT POINT (2)	TIN (2)	TERMINATION SPEC (1) ITEM NO.	NO.
				A 17					
A 20A	5	SHLD A20	22N			E3	37N		
A 20L		P1-T*	22N			P2-T*	22N		
A 20R		P1-S*	22N			P2-S*	22N		
A 21	4	P1-U*	22N			P1-U*	22N		
A 22	4	P1-V*	22N			P1-V*	22N		
A 23	4	P1-W*	22N			P1-W*	22N		
A 24	3		380	350 9 10	5		380	350 A 16	7A
				A 15					
A 24A	5	SHLD A24	22			E3	37N		
A 24W		P1-X*	22			P2-X*	22N		
A 25	2		380	350 11 12	5		380	350 A 18	7A
				A 17					
A 25A	5	SHLD A25	22N			E3	37N		
A 25L		P1-Z*	22N			P2-Z*	22N		
A 25R		P1-Y*	22N			P2-Y*	22N		
A 26	2		380	350 11 12	5		380	350 A 18	7A
				A 17					

(1) THE STD CONDUCTOR TERMINATION FIGURES ARE PER
(2) DIMENSIONS ARE IN INCHES AND TWO PLACE DECIMALS.

MANNED SPACECRAFT CENTER HOUSTON, TEXAS | SIZE A | 1900956
SCALE - NONE | REV LTR + | SHEET 11 OF 15

MIL 2085 - 4-63 WIR

GHR CABLE W 56 + 1900956

CONDUCTOR INDIVIDUAL LENGTH NUMBER	ITEM NO. (2)	FROM CUT WIRE OR SHIELD STRIP WIRE OR JACKET CIRCUIT POINT (2)	TIN (2)	TERMINATION SPEC. (1) ITEM NO.	NO.	TO CUT WIRE OR SHIELD STRIP WIRE OR JACKET CIRCUIT POINT (2)	TIN (2)	TERMINATION SPEC (1) ITEM NO.	NO.
A 13	2		280	250 11 12	5		280	250 A 18	7A
				A 17					
A 13A	5	SHLD A13	22N			E2	37N		
A 13L		P1-D*	22N			P2-D*	22N		
A 13R		P1-C*	22N			P2-C*	22N		
A 14	2		280	250 11 12	5		280	250 A 18	7A
				A 17					
A 14A	5	SHLD A14	22N			E2	37N		
A 14L		P1-F*	22N			P2-F*	22N		
A 14R		P1-E*	22N			P2-E*	22N		
A 15	2		280	250 11 12	5		280	250 A 18	7A
				A 17					
A 15A	5	SHLD A15	22N			E2	37N		
A 15L		P1-H*	22N			P2-H*	22N		
A 15R		P1-G*	22N			P2-G*	22N		
A 16	2		280	250 11 12	5		280	250 A 18	7A
				A 17					
A 16A	5	SHLD A16	22N			E2	37N		

(1) THE STD CONDUCTOR TERMINATION FIGURES ARE PER
(2) DIMENSIONS ARE IN INCHES AND TWO PLACE DECIMALS.

MANNED SPACECRAFT CENTER HOUSTON, TEXAS | SIZE A | 1900956
SCALE - NONE | REV LTR + | SHEET 9 OF 15

MIL 2085 - 4-63 WIR

GHR CABLE W 56 + 1900956

CONDUCTOR INDIVIDUAL LENGTH NUMBER	ITEM NO. (2)	FROM CUT WIRE OR SHIELD STRIP WIRE OR JACKET CIRCUIT POINT (2)	TIN (2)	TERMINATION SPEC. (1) ITEM NO.	NO.	TO CUT WIRE OR SHIELD STRIP WIRE OR JACKET CIRCUIT POINT (2)	TIN (2)	TERMINATION SPEC (1) ITEM NO.	NO.
A 31	4	P1-J	22N			P2-J	22N		
A 32	2		430	400 11 12	5		430	400 A 18	7A
				A 17					
A 32A	5	SHLD A32	22N			E4	37N		
A 32L		P1-KK	22N			P2-KK	22N		
A 32R		P1-JJ	22N			P2-JJ	22N		
A 33	2		430	400 11 12	5		430	400 A 18	7A
				A 17					
A 33A	5	SHLD A33				E4	37N		
A 33L		P1-MM				P2-MM	22N		
A 33R		P1-LL				P2-LL	22N		
A 34	2		480	450 11 12			480	450 A 18	7A
				A 17					
A 34A	5	SHLD A34	22N			E4	22N		
A 34L		P1-MM	22N			P2-MM	22N		
A 34R		P1-NN	22N			P2-NN	22N		
A 35	1		480	450 13 14	5		480	450 A 18	7A
				A 17					

(1) THE STD CONDUCTOR TERMINATION FIGURES ARE PER
(2) DIMENSIONS ARE IN INCHES AND TWO PLACE DECIMALS.

MANNED SPACECRAFT CENTER HOUSTON, TEXAS | SIZE A | 1900956
SCALE - NONE | REV LTR + | SHEET 13 OF 15

MIL 2085 - 4-63 WIR

INCHES 0 1 2
PHOTOGRAPHIC SCALE ONLY

GHR CABLE W 56 + 1900956

CONDUCTOR INDIVIDUAL LENGTH NUMBER	ITEM NO. (2)		FROM CUT WIRE OR SHIELD STRIP WIRE OR JACKET CIRCUIT POINT (2)	TIN (2)	TERMINATION SPEC. (1) ITEM NO.	NO.	TO CUT WIRE OR SHIELD STRIP WIRE OR JACKET CIRCUIT POINT (2)	TIN (2)	TERMINATION SPEC (1) ITEM NO.	NO.
A 26A	5		SHLD A26	22N			E3	37N		
A 26L			P1-CC	22N			P2-CC	22N		
A 26R			P1-BB	22N			P2-BB	22N		
A 27	2			380 350	11 12	5		380 350	A 18	7A
					A 17					
A 27A	5		SHLD A27	22N			E3	37N		
A 27L			P1-EE	22N			P2-EE	22N		
A 27R			P1-DD	22N			P2-DD	22N		
A 28	2			430 400	11 12			430 400	A 18	7A
					A 17					
A 28A	5		SHLD A28				E3	37N		
A 28L			P1-GG				P2-GG	22N		
A 28R			P1-FF				P2-FF	22N		
A 29	3			430 400	9 10	5		430 400	A 16	7A
					A 15					
A 29A	5		SHLD A29	22N			E4	37N		
A 29W			P1-HH	22N			P2-HH	22N		
A 30	4		P1-A*	22N			P2-A*	22N		

(1) THE STD CONDUCTOR TERMINATION FIGURES ARE PER
(2) DIMENSIONS ARE IN INCHES AND TWO PLACE DECIMALS.

MANNED SPACECRAFT CENTER HOUSTON, TEXAS | SIZE A | 1900956
SCALE - NONE | REV LTR + | SHEET 12 OF 15

MIL 2085 - 4-63 WIR

GHR CABLE W 56 1900956

CONDUCTOR INDIVIDUAL LENGTH NUMBER	ITEM NO. (2)		FROM CUT WIRE OR SHIELD STRIP WIRE OR JACKET CIRCUIT POINT (2)	TIN (2)	TERMINATION SPEC. (1) ITEM NO.	NO.	TO CUT WIRE OR SHIELD STRIP WIRE OR JACKET CIRCUIT POINT (2)	TIN (2)	TERMINATION SPEC (1) ITEM NO.	NO.
A 35A	5		SHLD A35	22N			E4	37N		
A 35L			P1-L	22N			P2-L	22N		
A 35R			P1-K	22N			P2-K	22N		
A 35Y			P1-M	22N			P2-M	22N		
A 36	4		P1-H	22N			E1	22N		
A 37	4		E1	22N			E2	22N		
A 38	4		E2	22N			E3	22N		
A 39	4		E3	22N			E4	22N		

(1) THE STD CONDUCTOR TERMINATION FIGURES ARE PER
(2) DIMENSIONS ARE IN INCHES AND TWO PLACE DECIMALS.

MANNED SPACECRAFT CENTER HOUSTON, TEXAS | SIZE A | 1900956
SCALE - NONE | REV LTR + | SHEET 14 OF 15

MIL 2085 - 4-63 WIR

PHOTOGRAPHIC SCALE ONLY 0 1 2 INCHES

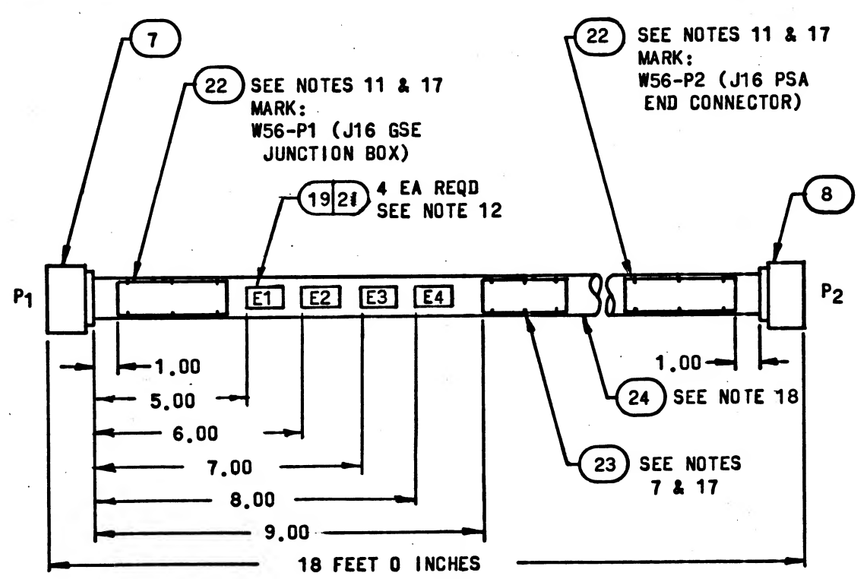

MANNED SPACECRAFT CENTER HOUSTON, TEXAS | SIZE A | 1900956
SCALE - NONE | REV LTR + | SHEET 15 OF 15

MIL 2084 4-63

PENNANT NOTE	GENERAL NOTES
1	SEE CONDUCTOR CHART
2	SEE CONDUCTOR CHART
3	INTERPRET DRAWING IN ACCORDANCE WITH STANDARDS PRESCRIBED BY MIL-D-70327.
4	MARK CONDUCTOR IDENTIFICATION ON SINGLE CONDUCTORS PER ND1002019 OMITTING ALL SUFFIX LETTERS EXCEPT A AND B.
5	SPACING OF CONDUCTOR IDENTIFICATION SHALL BE EVERY 15 INCHES MAX. AND AT EACH TERMINATION.
6	SPIRALLING OF THE MARKING IS ALLOWED.
7	IDENTIFY USING DRAWING NO. AND REVISION LETTER PER MIL-STD-130 (ES-267). .12 INCH HIGH CHARACTERS BLACK.
8	Y OR N IN TINNED COLUMN INDICATES YES OR NO.
9	A LETTER WITH AN ASTERISK SUFFIX INDICATES A LOWER CASE LETTER.
10	VENDOR ITEM - SEE SPECIFICATION CONTROL DRAWING.
11	MARK IDENTIFICATION BAND WITH REFERENCE DESIGNATION AS NOTED .12 INCH HIGH COLOR BLACK, HOT IMPRESSION STAMPING PER ND1002019. CENTRALIZE.
12	MARK SLEEVING WITH REFERENCE DESIGNATION AS SHOWN .12 INCH HIGH, COLOR BLACK PER ND1002019.
13	MARK SLEEVING OF MULTI-CONDUCTORS WITH THE CONDUCTOR NUMBER .12 INCH HIGH, COLOR BLACK, PER ND1002019 WHEN SLEEVING ITEM NUMBERS FOLLOW AN A OR T IN THE ACCESSORIES ITEM NUMBER FIELD.

MANNED SPACECRAFT CENTER HOUSTON, TEXAS | SIZE A | 1900958
SCALE - NONE | REV LTR A | SHEET 2 OF 14

MIL 2064 4-63

PENNANT NOTE	GENERAL NOTES
14	A OR T PREFIX IN THE ACCESSORIES ITEM NUMBER COLUMN INDICATES THE READING POSITION AWAY FROM TERMINATION OR TOWARD TERMINATION RESPECTIVELY, OF THE WIRE MARKER SLEEVE.
15	THE SUFFIX LETTER OF A CONDUCTOR IDENTIFICATION NUMBER INDICATES CONDUCTOR SHIELDING, COLOR, OR MARKING. A - FROM END SHIELD L - WHITE WITH BLUE TRACER R - WHITE WITH RED TRACER Y - WHITE WITH YELLOW TRACER W - WHITE
16	ASSEMBLE CONTACTS IN ALL CONNECTOR GROMMET HOLES.
17	SECURE TO CABLE USING ITEM 23. MARKING TO READ AWAY FROM CONNECTOR.
18	SEAL ZIPPER TUBING PER ND1002153.
19	SERIALIZE PER ND1002023.
20	ITEM 24 FURNISHED WITH ITEM 7
21	ITEM 25 FURNISHED WITH ITEM 6
22	ITEM 26 SHALL BE SHORTENED WHEN NECESSARY TO AVOID INTERFERENCE WITH FERRULES AND MAY BE CUT LENGTHWISE ON ONE SIDE. SELECT ONE OR MORE OF ITEM 26 AS REQUIRED TO FIT

MANNED SPACECRAFT CENTER HOUSTON, TEXAS | SIZE A | 1900958
SCALE - NONE | REV LTR A | SHEET 3 OF 14

MIL 2064 4-63

APPLICATION

NEXT ASSY	USED ON
1904308	1900005-01

REVISIONS

SYM	DESCRIPTION	DATE	APPROVAL
A	CHANGE IN ACCORDANCE WITH CM 193622- TDRR 07048	5 FEB 64	KPR 1/23

FOR INFORMATION ONLY

CLASS B RELEASE TDR No. 0481 DATE 2-6-64

REV SHEET	A	A	A	A	A	A	A	A	A	A	A	A	A	A
REV STATUS	A	A	A	A	A	A	A	A	A	A	A	A	A	A
OF SHEETS SHEET	1	2	3	4	5	6	7	8	9	10	11	12	13	14

AC SPARK PLUG DIVISION, GMC
MILWAUKEE, WISCONSIN

ACSP PN

DRAWN DATE 29 Oct 63
CHECKED DATE 1 Nov 63
APPROVAL DATE 11/22/63
APPROVAL DATE 11/22/63

MANNED SPACECRAFT CENTER HOUSTON, TEXAS

CABLE INTERCONNECT W57
OSS TESTING

NASA APPROVAL DATE 4-26-63
MIT APPROVAL DATE 26 Apr 63

CODE IDENT NO. | SIZE A | 1900958 | REV A
SCALE NONE | SHEET 1 OF 14
CONTRACT NAS9-497

PENNANT NOTE — GENERAL NOTES

TOLERANCE CHART, UNLESS OTHERWISE SPECIFIED ---

APPLICABLE LENGTH FOR WIRE OR CABLE, STRIP WIRE, STRIP JACKET, CUT WIRE OR CUT SHIELD.	TOLERANCE: WIRE OR CABLE	STRIP: WIRE	STRIP: JACKET	CUT: WIRE	CUT: SHIELD
UNDER 1 INCH	+ .06-.00	+.03-.00	+.06-.06	+.06-.06	+.06-.06
1 INCH TO 6 INCHES	+ .50-.00	+.06-.00	+.25-.25	+.25-.25	+.25-.25
6 INCHES TO 6 FEET	+1.00-.00		+.50-.50	+.50-.50	+.50-.50
OVER 6 FEET	+2.00-.00				

MANNED SPACECRAFT CENTER HOUSTON, TEXAS | SIZE A | 1900958
SCALE - NONE | REV LTR A | SHEET 4 OF 14

MIL 2064 4-63

PENNANT NOTE — LIST OF MATERIALS

PENNANT NOTE	ITEM	QTY	PART NO	DESCRIPTION
	1	1	1900958-001	WIRE ND1002181 TYPE 2 CLASS 4, WHT. JKT., 20AWG WHT/BLU, WHT/RED, 375 FT. TOTAL LENGTH
	2	1	1900958-002	WIRE ND1002181 TYPE 1 CLASS 1, WHT. JKT., 20AWG 85 FT. TOTAL LENGTH
	3	1	1900958-003	WIRE ND1002181 TYPE 1 CLASS 4, WHT. JKT., 20AWG 27 FT. TOTAL LENGTH
	4	1	1900958-004	WIRE ND1002181 TYPE 1 CLASS 1, WHT. JKT., 22AWG 30 FT. TOTAL LENGTH
	5	1	1900958-005	WIRE ND1002181 TYPE 3 CLASS 4, WHT. JKT., 20AWG WHT/BLU, WHT/RED, WHT/YEL, 17 FT. TOTAL LENGTH
16	6	1	MS3126F24-61SW (1897048-611)	CONNECTOR PLUG
16	7	1	MS3126F24-61PW (1897047-611)	CONNECTOR PLUG
10	8	21	1000243-011	FERRULE-ELEC. CONDUCTOR
10	9	21	1000242-009	FERRULE-ELEC. CONDUCTOR
10	10	1	1000243-015	FERRULE-ELEC. CONDUCTOR
10	11	1	1000242-016	FERRULE-ELEC. CONDUCTOR
10	12	1	1000243-004	FERRULE-ELEC. CONDUCTOR
10	13	1	1000242-004	FERRULE-ELEC. CONDUCTOR
10	14	3	1016006-003	SPLICE REDUCER
10	15	22	1010490-194	INSULATION-SLEEVING ELEC.
10	16	22	1010490-196	INSULATION-SLEEVING ELEC.

MANNED SPACECRAFT CENTER HOUSTON, TEXAS | SIZE A | 1900958
SCALE-NONE | REV LTR A | SHEET 5 OF 14

MIL-2049-4-65

PENNANT NOTE — LIST OF MATERIALS

PENNANT NOTE	ITEM	QTY	PART NO	DESCRIPTION
10	17	3	1010490-256	INSULATION-SLEEVING ELEC.
10	18	1	1010490-198	INSULATION-SLEEVING ELEC.
10	19	1	1010490-200	INSULATION-SLEEVING ELEC.
10	20	2	1016128-041	BAND-IDENTIFICATION
10	21	1	1016128-011	BAND-IDENTIFICATION
	22	1	1900958-006	ZIPPER TUBING ND1002155 TYPE 1, PLASTIC, FLEXIBLE 1.125 DIA. 17 FT. TOTAL LENGTH
	23	AR	MIL-T-713	LACING TAPE TYPE P, CLASS 2, BLACK (ES-2732 NO. 18)
20	24			CONTACT PINS
21	25			CONTACT SOCKETS
22	26	AR	1897147-112, -116, -118	CABLE CLAMP SLEEVE

MANNED SPACECRAFT CENTER HOUSTON, TEXAS | SIZE A | 1900958
SCALE-NONE | REV LTR A | SHEET 6 OF 14

MIL-2049-4-65

CONDUCTOR NUMBER	ITEM NO.	▷	FROM CUT WIRE OR SHIELD / STRIP WIRE OR JACKET CIRCUIT POINT	▷	TYPE	▷	TERMINATION SPEC. ▷ ITEM NO.	NO.	TO CUT WIRE OR SHIELD / STRIP WIRE OR JACKET CIRCUIT POINT	▷	TYPE	▷	TERMINATION SPEC. ▷ ITEM NO.	NO.
A	1	1		23C	20C	8	9	5		23C	20C	A	16	7A
						A	15							
A	1A	4	SHLD A1	25N					E1	25N				
A	1L		P1-B*	19N		25			P2-B*	19N		24		
A	1R		P1-A*	19N		25			P2-A*	19N		24		
A	2	1		23C	20C	8	9	5		23C	20C	A	16	7A
						A	15							
A	2A	4	SHLD A2	25N					E1	25N				
A	2L		P1-D*	19N		25			P2-D*	19N		24		
A	2R		P1-C*	19N		25			P2-C*	19N		24		
A	3	1		23C	20C	8	9	5		23C	20C	A	16	
						A	15							
A	3A	4	SHLD A3	25N					E1	25N				
A	3L		P1-N*	19N		25			P2-N*	19N		24		
A	3R		P1-M*	19N		25			P2-M*	19N		24		
A	4	1		23C	20C	8	9	5		23C	20C	A	16	7A
						A	15							
A	4A	4	SHLD A4	25N					E1	25N				

▷1 THE STD CONDUCTOR TERMINATION FIGURES ARE PER
▷2 DIMENSIONS ARE IN INCHES AND TWO PLACE DECIMALS.

MANNED SPACECRAFT CENTER HOUSTON, TEXAS | SIZE A | 1900958
SCALE-NONE | REV LTR A | SHEET 7 OF 14

MIL-2049-4-65 WIR

CONDUCTOR NUMBER	ITEM NO.	▷	FROM CUT WIRE OR SHIELD / STRIP WIRE OR JACKET CIRCUIT POINT	▷	TYPE	▷	TERMINATION SPEC. ▷ ITEM NO.	NO.	TO CUT WIRE OR SHIELD / STRIP WIRE OR JACKET CIRCUIT POINT	▷	TYPE	▷	TERMINATION SPEC. ▷ ITEM NO.	NO.
A	4L		P1-Q*	19N		25			P2-Q*	19N		24		
A	4R		P1-P*	19N		25			P2-P*	19N		24		
A	5	1		28C	25C	8	9	5		28C	25C	A	16	7A
						A	15							
A	5A	4	SHLD A5	25N					E1	25N		-		
A	5L		P1-S*	19N		25			P2-S*	19N		24		
A	5R		P1-R*	19N		25			P2-R*	19N		24		
A	6	1		28C	25C	8	9	5		28C	25C	A	16	7A
						A	15							
A	6A	4	SHLD A6	25N					E1	25N				
A	6L		P1-U*	19N		25			P2-U*	19N		24		
A	6R		P1-T*	19N		25			P2-T*	19N		24		
A	7	1		28C	25C	8	9	5		28C	25C	A	16	7A
						A	15							
A	7A	4	SHLD A7	25N					E1	25N				
A	7L		P1-X*	19N		25			P2-X*	19N		24		
A	7R		P1-W*	19N		25			P2-W*	19N		24		
A	8	1		28C	25C	8	9	5		28C	25C	A	16	7A

▷1 THE STD CONDUCTOR TERMINATION FIGURES ARE PER
▷2 DIMENSIONS ARE IN INCHES AND TWO PLACE DECIMALS.

MANNED SPACECRAFT CENTER HOUSTON, TEXAS | SIZE A | 1900958
SCALE-NONE | REV LTR A | SHEET 8 OF 14

MIL-2049-4-65 WIR

GHE CABLE W 57 A 1900958

CONDUCTOR INDIVIDUAL LENGTH NUMBER	ITEM NO.	2	FROM CUT WIRE OR SHIELD STRIP WIRE OR JACKET CIRCUIT POINT	2	T I N	2	TERMINATION SPEC. ITEM NO.	1	NO.	TO CUT WIRE OR SHIELD STRIP WIRE OR JACKET CIRCUIT POINT	2	T I N	2	TERMINATION SPEC ITEM NO.	1	NO.
							A 15									
A 8A	4		SHLD A8	25N						E2	25N					
A 8L			P1-Z*	19N			25			P2-Z*	19N			24		
A 8R			P1-Y*	19N			25			P2-Y*	19N			24		
A 9	1			33Q		30Q	B 9		5		33Q		30Q	A 16		7A
							A 15									
A 9A	4		SHLD A9	25N						E2	25N					
A 9L			P1-BB	19N			25			P2-BB	19N			24		
A 9R			P1-AA	19N			25			P2-AA	19N			24		
A 10	1			33Q		30Q	B 9		5		33Q		30Q	A 16		7A
							A 15									
A 10A	4		SHLD A10	25N						E2	25N					
A 10L			P1-DD	19N			25			P2-DD	19N			24		
A 10R			P1-CC	19N			25			P2-CC	19N			24		
A 11	1			33Q		30Q	B 9		5		33Q		30Q	A 16		7A
							A 15									
A 11A	4		SHLD A11	25N						E2	25N					
A 11L			P1-FF	19N			25			P2-FF	19N			24		

1 THE STD CONDUCTOR TERMINATION FIGURES ARE PER
2 DIMENSIONS ARE IN INCHES AND TWO PLACE DECIMALS.

MANNED SPACECRAFT CENTER HOUSTON, TEXAS | SIZE A | 1900958
SCALE - NONE | REV LTR A | SHEET 9 OF 14

MIL 2049 - 4-63 WIN

GHE CABLE W 57 A 1900958

CONDUCTOR INDIVIDUAL LENGTH NUMBER	ITEM NO.	2	FROM CUT WIRE OR SHIELD STRIP WIRE OR JACKET CIRCUIT POINT	2	T I N	2	TERMINATION SPEC. ITEM NO.	1	NO.	TO CUT WIRE OR SHIELD STRIP WIRE OR JACKET CIRCUIT POINT	2	T I N	2	TERMINATION SPEC ITEM NO.	1	NO.
A 11R			P1-EE	19N			25			P2-EE	19N			24		
A 12	1			38Q		35Q	B 9		5		38Q		35Q	A 16		7A
							A 15									
A 12A	4		SHLD A12	25N						E2	25N					
A 12L			P1-HH	19N			25			P2-HH	19N			24		
A 12R			P1-GG	19N			25			P2-GG	19N			24		
A 13	1			38Q		35Q	B 9		5		38Q		35Q	A 16		7A
							A 15									
A 13A	4		SHLD A13	25N						E2	25N					
A 13L			P1-G*	19N			25			P2-G*	19N			24		
A 13R			P1-F*	19N			25			P2-F*	19N			24		
A 14	1			38Q		35Q	B 9		5		38Q		35Q	A 16		7A
							A 15									
A 14A	4		SHLD A14	25N						E2	25N					
A 14L			P1-Z	19N			25			P2-Z	19N			24		
A 14R			P1-Y	19N			25			P2-Y	19N			24		
A 15	1			38Q		35Q	B 9		5		38Q		35Q	A 16		7A
							A 15									

1 THE STD CONDUCTOR TERMINATION FIGURES ARE PER
2 DIMENSIONS ARE IN INCHES AND TWO PLACE DECIMALS.

MANNED SPACECRAFT CENTER HOUSTON, TEXAS | SIZE A | 1900958
SCALE - NONE | REV LTR A | SHEET 10 OF 14

MIL 2049 - 4-63 WIN

GHE CABLE W 57 A 1900958

CONDUCTOR INDIVIDUAL LENGTH NUMBER	ITEM NO.	2	FROM CUT WIRE OR SHIELD STRIP WIRE OR JACKET CIRCUIT POINT	2	T I N	2	TERMINATION SPEC. ITEM NO.	1	NO.	TO CUT WIRE OR SHIELD STRIP WIRE OR JACKET CIRCUIT POINT	2	T I N	2	TERMINATION SPEC ITEM NO.	1	NO.
A 15A	4		SHLD A15	25N						E3	25N					
A 15L			P1-I*	19N			25			P2-I*	19N			24		
A 15R			P1-H*	19N			25			P2-H*	19N			24		
A 16	1			43Q		40Q	B 9		5		43Q		35Q	A 16		7A
							A 15									
A 16A	4		SHLD A16	25N						E3	25N					
A 16L			P1-X	19N			25			P2-X	19N			24		
A 16R			P1-W	19N			25			P2-W	19N			24		
A 17	1			43Q		40Q	B 9		5		43Q		35Q	A 16		7A
							A 15									
A 17A	4		SHLD A17	25N						E3	25N					
A 17L			P1-K*	19N			25			P2-K*	19N			24		
A 17R			P1-J*	19N			25			P2-J*	19N			24		
A 18	1			43Q		40Q	B 9		5		43Q		40Q	A 16		7A
							A 15									
A 18A	4		SHLD A18	25N						E3	25N					
A 18L			P1-V	19N			25			P2-V	19N			24		
A 18R			P1-U	19N			25			P2-U	19N			24		

1 THE STD CONDUCTOR TERMINATION FIGURES ARE PER
2 DIMENSIONS ARE IN INCHES AND TWO PLACE DECIMALS.

MANNED SPACECRAFT CENTER HOUSTON, TEXAS | SIZE A | 1900958
SCALE - NONE | REV LTR A | SHEET 11 OF 14

MIL 2049 - 4-63 WIN

GHE CABLE W 57 A 1900958

CONDUCTOR INDIVIDUAL LENGTH NUMBER	ITEM NO.	2	FROM CUT WIRE OR SHIELD STRIP WIRE OR JACKET CIRCUIT POINT	2	T I N	2	TERMINATION SPEC. ITEM NO.	1	NO.	TO CUT WIRE OR SHIELD STRIP WIRE OR JACKET CIRCUIT POINT	2	T I N	2	TERMINATION SPEC ITEM NO.	1	NO.
A 19	1			43Q		40Q	B 9		5		43Q		40Q	A 16		7A
							A 15									
A 19A	4		SHLD A19	25N						E3	25N					
A 19L			P1-KK	19N			25			P2-KK	19N			24		
A 19R			P1-JJ	19N			25			P2-JJ	19N			24		
A 20	1			48Q		45Q	B 9		5		48Q		45Q	A 16		7A
							A 15									
A 20A	4		SHLD A20	25N						E3	25N					
A 20L			P1-MM	19N			25			P2-MM	19N			24		
A 20R			P1-LL	19N			25			P2-LL	19N			24		
A 21	1		-	48Q		45Q	B 9		5		48Q		45Q	A 16		7A
							A 15									
A 21A	4		SHLD A21	25N						E3	25N					
A 21L			P1-PP	19N			25			P2-PP	19N			24		
A 21R			P1-NN	19N			25			P2-NN	19N			24		
A 22	2		P1-E*	19N			25			P2-E*	19N			24		
A 23	2		P1-A	19N			25			P2-A	19N			24		
A 24	2		P1-C	19N			25			P2-C	19N			24		

1 THE STD CONDUCTOR TERMINATION FIGURES ARE PER
2 DIMENSIONS ARE IN INCHES AND TWO PLACE DECIMALS.

MANNED SPACECRAFT CENTER HOUSTON, TEXAS | SIZE A | 1900958
SCALE - NONE | REV LTR A | SHEET 12 OF 14

MIL 2049 - 4-63 WIN

GHE CABLE W 57 A 1900958

CONDUCTOR INDIVIDUAL LENGTH NUMBER	ITEM NO.	3	FROM CUT WIRE OR SHIELD STRIP WIRE OR JACKET CIRCUIT POINT	3	T I N	3	TERMINATION SPEC	3	NO.	TO CUT WIRE OR SHIELD STRIP WIRE OR JACKET CIRCUIT POINT	3	T I N	3	TERMINATION SPEC	3	NO.
A 25	2		P1-D		19N		25			P2-D		19N		24		
A 26	2		P1-E		19N		25			P2-E		19N		24		
A 27	5				48Q	45Q	10 11		5			48Q	45Q	A 16		7A
							A 15									
A 27A	4		SHLD A27		25N					E3		25				
A 27L			P1-G		19N		25			P2-G		19N		24		
A 27R			P1-F		19N		25			P2-F		19N		24		
A 27Y			P1-H		19N		25			P2-H		19N		24		
A 28	2		P1-B		19N		25			E1		25N				
A 29	2		E1		25N					E2		25N				
A 30	2		E2		25N					E3		25N				
A 31	3				48Q	45Q	12 13		5			48Q	45Q	A 15		7A
							A 16									
A 31A	4		SHLD A31		25N					E3		25N				
A 31W			P1-J		19N		25			P2-J		19N		24		

1 THE STD CONDUCTOR TERMINATION FIGURES ARE PER
2 DIMENSIONS ARE IN INCHES AND TWO PLACE DECIMALS.

MANNED SPACECRAFT CENTER HOUSTON, TEXAS | SIZE A | 1900958
SCALE-NONE | REV LTR A | SHEET 13 OF 14

MIL 2069 - 7-63 WIR

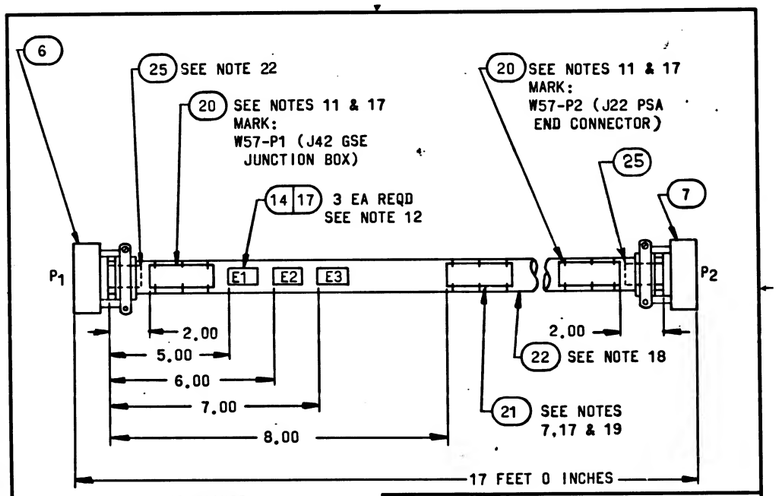

LOCATION TOLERANCE
(EXCEPT LENGTH):
+.50
-.50

MANNED SPACECRAFT CENTER HOUSTON, TEXAS | SIZE A | 1900958
SCALE-NONE | REV LTR A | SHEET 14 of 14

MIL 2069 4-63

GENERAL NOTES

NOTES

1 SEE CONDUCTOR CHART

2 SEE CONDUCTOR CHART

3 INTERPRET DRAWING IN ACCORDANCE WITH STANDARDS PRESCRIBED BY MIL-D-70327.

4 MARK CONDUCTOR IDENTIFICATION ON SINGLE CONDUCTORS PER ND1002019 OMITTING ALL SUFFIX LETTERS EXCEPT A AND B.

5 SPACING OF CONDUCTOR IDENTIFICATION SHALL BE EVERY 15 INCHES MAX AND AT EACH TERMINATION.

6 SPIRALLING OF THE MARKING IS ALLOWED.

7 IDENTIFY USING DRAWING NO. AND REVISION LETTER PER MIL-STD-130 (ES-267). .12 INCH HIGH CHARACTERS BLACK.

8 Y OR N IN TINNED COLUMN INDICATES YES OR NO.

9 A LETTER WITH AN ASTERISK SUFFIX, INDICATES A LOWER CASE LETTER.

10 VENDOR ITEM - SEE SPECIFICATION CONTROL DRAWING.

11 MARK IDENTIFICATION BAND WITH REFERENCE DESIGNATION AS NOTED .12 INCH HIGH COLOR BLACK, HOT IMPRESSION STAMPING PER ND1002019. CENTRALIZE.

MANNED SPACECRAFT CENTER HOUSTON, TEXAS	SIZE A	1900958
SCALE - NONE	REV LTR +	SHEET 2 of 14

MIL 2784 4-63

GENERAL NOTES

NOTES

12 MARK SLEEVING WITH REFERENCE DESIGNATIONS AS SHOWN .12 INCH HIGH, COLOR BLACK PER ND1002019.

13 MARK SLEEVING OF MULTI-CONDUCTORS WITH THE CONDUCTOR NUMBER .12 INCH HIGH, COLOR BLACK, PER ND1002019 WHEN SLEEVING ITEM NUMBERS FOLLOW AN A OR T IN THE ACCESSORIES ITEM NUMBER FIELD.

14 A OR T PREFIX IN THE ACCESSORIES ITEM NUMBER COLUMN INDICATES THE READING POSITION AWAY FROM TERMINATION OR TOWARD TERMINATION RESPECTIVELY, OF THE WIRE MARKER SLEEVE.

15 THE SUFFIX LETTER OF A CONDUCTOR IDENTIFICATION NUMBER INDICATES CONDUCTOR SHIELDING, COLOR, OR MARKING.

A - FROM END SHIELD
L - WHITE WITH BLUE TRACER
R - WHITE WITH RED TRACER
Y - WHITE WITH YELLOW TRACER
W - WHITE

16 ASSEMBLE CONTACTS IN ALL CONNECTOR GROMMET HOLES.

17 SECURE TO CABLE USING ITEM 23. MARKING TO READ AWAY FROM CONNECTOR.

18 SEAL ZIPPER TUBING PER ND 1002153.

19 SERIALIZE PER ND 1002023.

MANNED SPACECRAFT CENTER HOUSTON, TEXAS	SIZE A	1900958
SCALE - NONE	REV LTR +	SHEET 3 of 14

MIL 2784 4-63

APPLICATION		REVISIONS			
NEXT ASSY	USED ON	SYM	DESCRIPTION	DATE	APPROVAL
1900005-011	1900005-011				

FOR INFORMATION ONLY

CLASS B RELEASE TDR No. 0/8/2 DATE 26 Feb 63

REV													
SHEET													
REV STATUS	+	+	+	+	+	+	+	+	+	+	+	+	+
OF SHEETS	SHEET 1	2	3	4	5	6	7	8	9	10	11	12	13	14

AC SPARK PLUG DIVISION, GMC
MILWAUKEE, WISCONSIN

ACSP PN

DRAWN T. Fennell DATE 29 Oct 63
CHECKED R. Fleming 1 Nov 63
APPROVAL T. Abraham 5 Nov 63
APPROVAL L. Schiman 11/22/63
NASA APPROVAL [illegible] 11-26-63
MIT APPROVAL [illegible] 26 Nov 63

MANNED SPACECRAFT CENTER
HOUSTON, TEXAS

CABLE INTERCONNECT W57
OSS TESTING

CODE IDENT NO. 1900958 | SIZE A | REV —

SCALE NONE | SHEET 1 OF 14

CONTRACT NAS9-497

GENERAL NOTES

TOLERANCE CHART, UNLESS OTHERWISE SPECIFIED ---

APPLICABLE LENGTH FOR WIRE OR CABLE, STRIP WIRE, STRIP JACKET, CUT WIRE OR CUT SHIELD	TOLERANCE				
	WIRE OR CABLE	STRIP WIRE	STRIP JACKET	CUT WIRE	CUT SHIELD
UNDER 1 INCH	+ .06-.00	+.03-.00	+.06-.06	+.06-.06	+.06-.06
1 INCH TO 6 INCHES	+ .50-.00	+.06-.00	+.25-.25	+.25-.25	+.25-.25
6 INCHES TO 6 FEET	+1.00-.00		+.50-.50	+.50-.50	+.50-.50
OVER 6 FEET	+2.00-.00				

MANNED SPACECRAFT CENTER HOUSTON, TEXAS	SIZE A	1900958
SCALE - NONE	REV LTR +	SHEET 4 of 14

MIL 2784 4-63

INCHES 0 1 2
PHOTOGRAPHIC SCALE ONLY

LIST OF MATERIAL

SEE NOTE	ITEM	REQ'D	PART NUMBER	DESCRIPTION
10	17	3	1010490-256	INSULATION-SLEEVING ELEC
10	18	1	1010490-198	INSULATION-SLEEVING ELEC
10	19	1	1010490-200	INSULATION-SLEEVING ELEC
10	20	2	1016128-041	BAND-IDENTIFICATION
10	21	1	1016128-011	BAND-IDENTIFICATION
	22	1	1900958-006	ZIPPER TUBING ND 1002155 TYPE I, PLASTIC, FLEXIBLE 1.00 DIA 17 FEET TOTAL LENGTH
	23	AR	MIL-T-713	LACING TAPE TYPE P, CLASS 2, BLACK (ES-2732 NO. 18)

MANNED SPACECRAFT CENTER HOUSTON, TEXAS	SIZE A	1900958
SCALE-NONE	REV LTR +	SHEET 6 of 14

MIL 2084 4-63

CONDUCTOR NUMBER	INDIVIDUAL LENGTH ITEM NO.	3		FROM CUT WIRE OR SHIELD STRIP WIRE OR JACKET CIRCUIT POINT	2	TIN	2	TERMINATION SPEC. 1 ITEM NO.	NO.	TO CUT WIRE OR SHIELD STRIP WIRE OR JACKET CIRCUIT POINT	2	TIN	2	TERMINATION SPEC 1 ITEM NO.	NO.
A 1	1				230		200	8 9 5			230		200	A 16 7A	
								A 15							
A 1A	4			SHLD A1	22N					E1	37N				
A 1L				P1-B*	22N					P2-B*	22N				
A 1R				P1-A*	22N					P2-A*	22N				
A 2	1				230		200	8 9 5			230		200	A 16 7A	
								A 15							
A 2A	4			SHLD A2	22N					E1	37N				
A 2L				P1-D*	22N					P2-D*	22N				
A 2R				P1-C*	22N					P2-C*	22N				
A 3	1				2		200	8 9 5			230		200	A 16	
								A 15							
A 3A	4			SHLD A3	22N					E1	37N				
A 3L				P1-N*	22N					P2-N*	22N				
A 3R				P1-M*	22N					P2-M*	22N				
A 4	1				230		200	8 9 5			230		200	A 16 7A	
								A 15							
A 4A	4			SHLD A4	22N					E1	37N				

1 THE STD CONDUCTOR TERMINATION FIGURES ARE PER
2 DIMENSIONS ARE IN INCHES AND TWO PLACE DECIMALS.

MANNED SPACECRAFT CENTER HOUSTON, TEXAS	SIZE A	1900958
SCALE-NONE	REV LTR +	SHEET 7 OF 14

MIL 2085 - 4-63 WIR

LIST OF MATERIAL

SEE NOTE	ITEM	REQ'D	PART NUMBER	DESCRIPTION
	1	1	1900958-001	WIRE ND 1002181, TYPE 2, CLASS 4, WHT JACKET, 20 AWG WHT/BLU,WHT/RED, 375 FT TOTAL LENGTH
	2	1	1900958-002	WIRE ND 1002181, TYPE 1, CLASS 1, WHT JACKET, 20 AWG, 85 FT TOTAL LENGTH
	3	1	1900958-003	WIRE ND 1002181, TYPE 1, CLASS 4, WHT JACKET, 20 AWG, 27 FT TOTAL LENGTH
	4	1	1900958-004	WIRE ND 1002181, TYPE 1, CLASS 1, WHT JACKET, 22 AWG, 30 FT TOTAL LENGTH
	5	1	1900958-005	WIRE ND 1002181, TYPE 3, CLASS 4, WHT JACKET, 20 AWG,WHT/BLU,WHT/RED,WHT/YEL 17 FT TOTAL LENGTH
16	6	1	MS3126F24-61SW	(1897048-611) CONNECTOR PLUG
16	7	1	MS3126F24-61PW	(1897047-611) CONNECTOR PLUG
10	8	21	1000243-014	FERRULE-ELEC, CONDUCTOR
10	9	21	1000242-012	FERRULE-ELEC, CONDUCTOR
10	10	1	1000243-015	FERRULE-ELEC, CONDUCTOR
10	11	1	1000242-016	FERRULE-ELEC, CONDUCTOR
10	12	1	1000243-004	FERRULE-ELEC, CONDUCTOR
10	13	1	1000242-004	FERRULE-ELEC, CONDUCTOR
10	14	3	1016006-003	SPLICE REDUCER
10	15	22	1010490-194	INSULATION-SLEEVING ELEC
10	16	22	1010490-196	INSULATION-SLEEVING ELEC

MANNED SPACECRAFT CENTER HOUSTON, TEXAS	SIZE A	1900958
SCALE-NONE	REV LTR +	SHEET 5 of 14

MIL 2084 4-63

CONDUCTOR NUMBER	INDIVIDUAL LENGTH ITEM NO.	3		FROM CUT WIRE OR SHIELD STRIP WIRE OR JACKET CIRCUIT POINT	2	TIN	2	TERMINATION SPEC. 1 ITEM NO.	NO.	TO CUT WIRE OR SHIELD STRIP WIRE OR JACKET CIRCUIT POINT	2	TIN	2	TERMINATION SPEC 1 ITEM NO.	NO.
A 4L				P1-Q*	22N					P2-Q*	22N				
A 4R				P1-P*	22N					P2-P*	22N				
A 5	1				280		250	8 9 5			280		250	A 16 7A	
								A 15							
A 5A	4			SHLD A5	22N					E1	37N				
A 5L				P1-S*	22N					P2-S*	22N				
A 5R				P1-R*	22N					P2-R*	22N				
A 6	1				280		250	8 9 5			280		250	A 16 7A	
								A 15							
A 6A	4			SHLD A6	22N					E1	37N				
A 6L				P1-U*	22N					P2-U*	22N				
A 6R				P1-T*	22N					P2-T*	22N				
A 7	1				280		250	8 9 5			280		250	A 16 7A	
								A 15							
A 7A	4			SHLD A7	22N					E1	37N				
A 7L				P1-X*	22N					P2-X*	22N				
A 7R				P1-W*	22N					P2-W*	22N				
A 8	1				280		250	8 9 5			280		250	A 16 7A	

1 THE STD CONDUCTOR TERMINATION FIGURES ARE PER
2 DIMENSIONS ARE IN INCHES AND TWO PLACE DECIMALS.

MANNED SPACECRAFT CENTER HOUSTON, TEXAS	SIZE A	1900958
SCALE-NONE	REV LTR +	SHEET 8 OF 14

MIL 2085 - 4-63 WIR

INCHES 0 1 2
PHOTOGRAPHIC SCALE ONLY

GHE CABLE W 57 + 1900958

CONDUCTOR NUMBER	INDIVIDUAL LENGTH ITEM NO.	[2]	FROM CUT WIRE OR SHIELD / STRIP WIRE OR JACKET / CIRCUIT POINT	[2]	TIN	[2]	TERMINATION SPEC. [1] ITEM NO.	NO.	TO CUT WIRE OR SHIELD / STRIP WIRE OR JACKET / CIRCUIT POINT	[2]	TIN	[2]	TERMINATION SPEC [1] ITEM NO.	NO.
A 11R			P1-EE	22N					P2-EE	22N				
A 12	1			380	350	8	9 / A 15	5		380	350	A 16	7A	
A 12A	4		SHLD A12	22N					E2	37N				
A 12L			P1-HH	22N					P2-HH	22N				
A 12R			P1-GG	22N					P2-GG	22N				
A 13	1			380	350	8	9 / A 15	5		380	350	A 16	7A	
A 13A	4		SHLD A13	22N					E2	37N				
A 13L			P1-G*	22N					P2-G*	22N				
A 13R			P1-F*	22N					P2-F*	22N				
A 14	1			380	350	8	9 / A 15	5		380	350	A 16	7A	
A 14A	4		SHLD A14	22N					E2	37N				
A 14L			P1-Z	22N					P2-Z	22N				
A 14R			P1-Y	22N					P2-Y	22N				
A 15	1			380	350	8	9 / A 15	5		380	350	A 16	7A	

[1] THE STD CONDUCTOR TERMINATION FIGURES ARE PER
[2] DIMENSIONS ARE IN INCHES AND TWO PLACE DECIMALS.

MANNED SPACECRAFT CENTER HOUSTON, TEXAS | SIZE A | 1900958
SCALE - NONE | REV LTR + | SHEET 10 OF 14

MIL 2085 - 4-63 WIR

GHE CABLE W 57 + 1900958

CONDUCTOR NUMBER	INDIVIDUAL LENGTH ITEM NO.	[2]	FROM CUT WIRE OR SHIELD / STRIP WIRE OR JACKET / CIRCUIT POINT	[2]	TIN	[2]	TERMINATION SPEC. [1] ITEM NO.	NO.	TO CUT WIRE OR SHIELD / STRIP WIRE OR JACKET / CIRCUIT POINT	[2]	TIN	[2]	TERMINATION SPEC [1] ITEM NO.	NO.
							A 15							
A 8A	4		SHLD A8	22N					E2	37N				
A 8L			P1-Z*	22N					P2-Z*	22N				
A 8R			P1-Y*	22N					P2-Y*	22N				
A 9	1			330	300	8	9 / A 15	5		330	300	A 16	7A	
A 9A	4		SHLD A9	22N					E2	37N				
A 9L			P1-BB	22N					P2-BB	22N				
A 9R			P1-AA	22N					P2-AA	22N				
A 10	1			330	300	8	9 / A 15	5		330	300	A 16	7A	
A 10A	4		SHLD A10	22N					E2	37N				
A 10L			P1-DD	22N					P2-DD	22N				
A 10R			P1-CC	22N					P2-CC	22N				
A 11	1			330	300	8	9 / A 15	5		330	300	A 16	7A	
A 11A	4		SHLD A11	22N					E2	37N				
A 11L			P1-FF	22N					P2-FF	22N				

[1] THE STD CONDUCTOR TERMINATION FIGURES ARE PER
[2] DIMENSIONS ARE IN INCHES AND TWO PLACE DECIMALS.

MANNED SPACECRAFT CENTER HOUSTON, TEXAS | SIZE A | 1900958
SCALE - NONE | REV LTR + | SHEET 9 OF 14

MIL 2085 - 4-63 WIR

GHE CABLE W 57 + 1900958

CONDUCTOR NUMBER	INDIVIDUAL LENGTH ITEM NO.	[2]	FROM CUT WIRE OR SHIELD / STRIP WIRE OR JACKET / CIRCUIT POINT	[2]	TIN	[2]	TERMINATION SPEC. [1] ITEM NO.	NO.	TO CUT WIRE OR SHIELD / STRIP WIRE OR JACKET / CIRCUIT POINT	[2]	TIN	[2]	TERMINATION SPEC [1] ITEM NO.	NO.
A 15A	4		SHLD A15	22N					E3	37N				
A 15L			P1-I*	22N					P2-I*	22N				
A 15R			P1-H*	22N					P2-H*	22N				
A 16	1			430	400	8	9 / A 15	5		430	350	A 16	7A	
A 16A	4		SHLD A16	22N					E3	37N				
A 16L			P1-X	22N					P2-X	22N				
A 16R			P1-W	22N					P2-W	22N				
A 17	1			430	400	8	9 / A 15	5		430	350	A 16	7A	
A 17A	4		SHLD A17	22N					E3	37N				
A 17L			P1-K*	22N					P2-K*	22N				
A 17R			P1-J*	22N					P2-J*	22N				
A 18	1			430	400	8	9 / A 15	5		430	400	A 16	7A	
A 18A	4		SHLD A18	22N					E3	37N				
A 18L			P1-V	22N					P2-V	22N				
A 18R			P1-U	22N					P2-U	22N				

[1] THE STD CONDUCTOR TERMINATION FIGURES ARE PER
[2] DIMENSIONS ARE IN INCHES AND TWO PLACE DECIMALS.

MANNED SPACECRAFT CENTER HOUSTON, TEXAS | SIZE A | 1900958
SCALE - NONE | REV LTR + | SHEET 11 OF 14

MIL 2085 - 4-63 WIR

GHE CABLE W 57 + 1900958

CONDUCTOR NUMBER	INDIVIDUAL LENGTH ITEM NO.	[2]	FROM CUT WIRE OR SHIELD / STRIP WIRE OR JACKET / CIRCUIT POINT	[2]	TIN	[2]	TERMINATION SPEC. [1] ITEM NO.	NO.	TO CUT WIRE OR SHIELD / STRIP WIRE OR JACKET / CIRCUIT POINT	[2]	TIN	[2]	TERMINATION SPEC [1] ITEM NO.	NO.
A 19	1			430	400	8	9 / A 15	5		430	400	A 16	7A	
A 19A	4		SHLD A19	22N					E3	37N				
A 19L			P1-KK	22N					P2-KK	22N				
A 19R			P1-JJ	22N					P2-JJ	22N				
A 20	1			480	450	8	9 / A 15	5		480	450	A 16	7A	
A 20A	4		SHLD A20	22N					E3	37N				
A 20L			P1-MM	22N					P2-MM	22N				
A 20R			P1-LL	22N					P2-LL	22N				
A 21	1			480	450	8	9 / A 15	5		480	450	A 16	7A	
A 21A	4		SHLD A21	22N					E3	37N				
A 21L			P1-PP	22N					P2-PP	22N				
A 21R			P1-NN	22N					P2-NN	22N				
A 22	2		P1-E*	22N					P2-E*	22N				
A 23	2		P1-A	22N					P2-A	22N				
A 24	2		P1-C	22N					P2-C	22N				

[1] THE STD CONDUCTOR TERMINATION FIGURES ARE PER
[2] DIMENSIONS ARE IN INCHES AND TWO PLACE DECIMALS.

MANNED SPACECRAFT CENTER HOUSTON, TEXAS | SIZE A | 1900958
SCALE - NONE | REV LTR + | SHEET 12 OF 14

MIL 2085 - 4-63 WIR

INCHES 0 1 2
PHOTOGRAPHIC SCALE ONLY

GHE CABLE W 57 + 1900958

CONDUCTOR INDIVIDUAL LENGTH NUMBER	ITEM NO.	2		FROM CUT WIRE OR SHIELD STRIP WIRE OR JACKET CIRCUIT POINT	2	TIN	2	TERMINATION SPEC. ITEM NO.	1	NO.		TO CUT WIRE OR SHIELD STRIP WIRE OR JACKET CIRCUIT POINT	2	TIN	2	TERMINATION SPEC ITEM NO.	1	NO.	
A 25	2			P1-D	22	N						P2-D	22	N					
A 26	2			P1-E	22	N						P2-E	22	N					
A 27	5				480		450	10 11		5			480		450	A 16		7A	
								A 15											
A 27A	4			SHLD A27	22	N						E3	37						
A 27L				P1-G	22	N						P2-F	22	N					
A 27R				P1-F	22	N						P2-F	22	N					
A 27Y				P1-H	22	N						P2-F	22	N					
A 28	2			P1-B	22	N						E1	37	N					
A 29	2			E1	22	N						E2	37	N					
A 30	2			E2	22	N						E3	37	N					
A 31	3				480		450	12 13		5			480		450	A 19		7A	
								A 18											
A 31A	4			SHLD A31	22	N						E3	37	N					
A 31W				P1-J	22	N						P2-J	22	N					

1 THE STD CONDUCTOR TERMINATION FIGURES ARE PER

2 DIMENSIONS ARE IN INCHES AND TWO PLACE DECIMALS.

MANNED SPACECRAFT CENTER HOUSTON, TEXAS | SIZE A | 1900958

SCALE - NONE | REV LTR + | SHEET 13 OF 14

MIL 2085 - 4-63 WIR

PHOTOGRAPHIC SCALE ONLY 0 1 2 INCHES

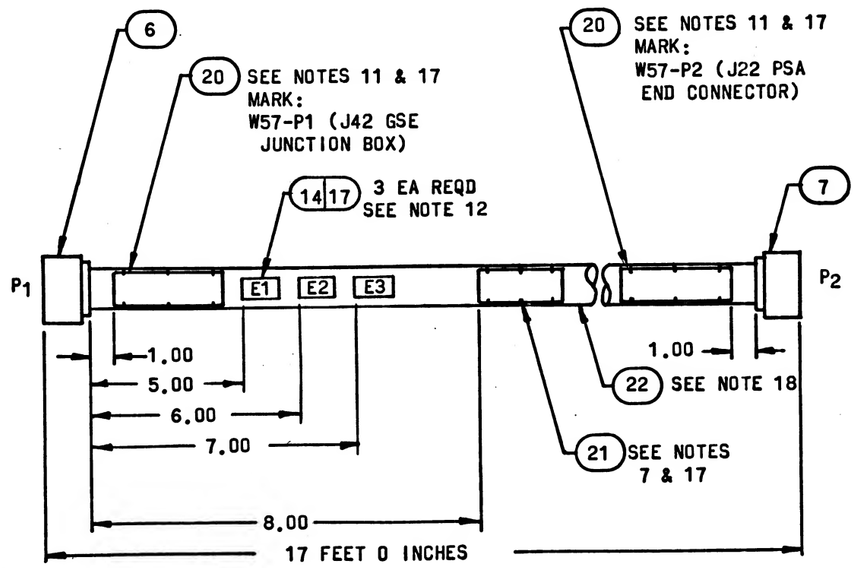

MANNED SPACECRAFT CENTER HOUSTON, TEXAS | SIZE A | 1900958

SCALE - NONE | REV LTR + | SHEET 14 OF 14

MIL 2084 4-63

APPLICATION		REVISIONS			
NEXT ASSY	USED ON	SYM	DESCRIPTION	DATE	APPROVAL
1901308	1900005-011 09682 09683	A	CHANGE IN ACCORDANCE WITH CM-193384	6 FEB -64	J.E.G.
		B	CHANGED IN ACCORDANCE WITH CM 195378	15 MAR -64	R.L.

FOR INFORMATION ONLY

CLASS B RELEASE TDR No. 6681 DATE 21 Jan 63

REV										
SHEET										
REV STATUS	REL	B	A	A	A	A	A	A	A	B
OF SHEETS	SHEET	1	2	3	4	5	6	7	8	9	10

AC SPARK PLUG DIVISION, GMC
MILWAUKEE, WISCONSIN

MANNED SPACECRAFT CENTER
HOUSTON, TEXAS

ACSP PN

DRAWN [illegible] DATE 29 OCT 63
CHECKED [illegible] 5 NOV 63
APPROVAL [illegible] 5 NOV 63
APPROVAL L. Lederman 11-7-63

CABLE INTERCONNECT W22
G&N TESTING

NASA APPROVAL [illegible] 11-26-63
MIT APPROVAL [illegible] 26 Nov 63

CODE IDENT NO.	SIZE		REV
	A	1900959	B

CONTRACT NAS9-497 SCALE NONE SHEET 1 OF 10

GHY CABLE W-22 A 1900959

PENNANT NOTE — GENERAL NOTES

1 SEE CONDUCTOR CHART, PENNANT NOTE 1
2 SEE CONDUCTOR CHART, PENNANT NOTE 2
3 INTERPRET DRAWING IN ACCORDANCE WITH STANDARDS PRESCRIBED BY MIL-D-70327.
4 WHEN CONDUCTOR IDENTIFICATION ON SINGLE CONDUCTORS PER ND102019 OMITTING ALL SUFFIX LETTERS EXCEPT A AND B.
5 SPACING OF CONDUCTOR IDENTIFICATION SHALL BE EVERY 15 INCHES MAX AND AT EACH TERMINATION.
6 SPIRALLING OF THE MARKING IS ALLOWED.
7 IDENTIFY USING DRAWING NO. AND REVISION LETTER PER MIL-STD-130 ES-2671, .12 INCH HIGH CHARACTERS WHITE.
8 Y OR N IN TINNED COLUMN INDICATES YES OR NO.
9 A LETTER WITH AN ASTERISK SUFFIX INDICATES A LOWER CASE LETTER.
10 VENDOR ITEM - SEE SPECIFICATION CONTROL DRAWING.
11 MARK IDENTIFICATION MAY WITH REFERENCE DESIGNATION AS NOTED .12 INCH HIGH COLOR WHITE, HOT IMPRESSION STAMPING PER ND 102019. CENTRALIZE.
12 MARK SLEEVING WITH REFERENCE DESIGNATIONS AS SHOWN .12 INCH HIGH, COLOR BLACK PER ND 102019.
13 MARK SLEEVING OF MULTI-CONDUCTORS WITH THE CONDUCTOR NUMBER .12 INCH HIGH, COLOR BLACK, PER ND 102019 WHEN SLEEVING ITEM NUMBERS FOLLOW AN A OR T IN THE ACCESSORIES ITEM NUMBER FIELD.

MANNED SPACECRAFT CENTER HOUSTON TEXAS | SIZE A | SCALE NONE | REV LTR | 1900959 | SHEET 2 OF 10

GHY CABLE W-22 A 1900959

PENNANT NOTE — GENERAL NOTES

14 TOLERANCE CHART, UNLESS OTHERWISE SPECIFIED ---

APPLICABLE LENGTH FOR WIRE OR CABLE, STRIP WIRE, STRIP JACKET, CUT WIRE OR CUT SHIELD.	WIRE OR CABLE	WIRE STRIP	JACKET	WIRE CUT	SHIELD
	TOLERANCE				
UNDER 1 INCH	+.06-.00	+.03-.004	+.06-.06	+.06-.06	+.06-.06
1 INCH TO 6 INCHES	+.50-.00	+.06-.00	+.25-.25	+.25-.25	+.25-.25
6 INCHES TO 6 FEET	+1.00-.00		+.50-.50	+.50-.50	+.50-.50
OVER 6 FEET	+2.00-.00				

MANNED SPACECRAFT CENTER HOUSTON TEXAS | SIZE A | 1900959 | SCALE NONE | REV LTR A | SHEET 3 OF 10

GHY CABLE W-22 A 1900959

PENNANT NOTE — GENERAL NOTES

15 A OR T PREFIX IN THE ACCESSORIES ITEM NUMBER COLUMN INDICATES THE READING POSITION AWAY FROM TERMINATION OR TOWARD TERMINATION RESPECTIVELY, OF THE WIRE MARKER SLEEVE.
16 THE SUFFIX LETTER OF A CONDUCTOR IDENTIFICATION NUMBER INDICATES CONDUCTOR SHIELDING COLOR OR MARKING.
A - FROM END SHIELD
L - WHITE WITH BLUE TRACER
R - WHITE WITH RED TRACER
17 ASSEMBLE CONTACTS IN ALL CONNECTOR GROMMET HOLES.
18 SECURE TO CABLE USING ITEM 9. MARKING TO READ AWAY FROM CONNECTOR.
19 SEAL ZIPPER TUBING PER ND 102193.
20 SERIALIZE PER ND. 102023.
21 ITEM 10 FURNISHED WITH ITEM 2.
22 ITEM 11 FURNISHED WITH ITEM 1.
ITEM 12 SHALL BE SHORTENED WHEN NECESSARY TO AVOID INTERFERENCE WITH FERRULES AND MAY BE CUT LENGTHWISE ON ONE SIDE. SELECT ONE OR MORE OF ITEM 12 AS REQUIRED TO FIT.

MANNED SPACECRAFT CENTER HOUSTON TEXAS | SIZE A | 1900959 | SCALE NONE | REV LTR A | SHEET 4 OF 10

LIST OF MATERIALS

PENNANT NOTE	ITEM	QTY	PART NO	DESCRIPTION
17	1	1	MS3126F-22-55SZ	(1897046-554) CONNECTOR
17	2	1	MS3126F-24-61P	(1897047-610) CONNECTOR
	3	1	1900959-001	WIRE ND1002181 TYPE 1 CLASS 1, 20AWG WHT. 432 FT. TOTAL LENGTH
	4	1	1900959-002	WIRE ND1002181 TYPE 2 CLASS 1, T2, 20AWG WHT. (CONDUCTORS MARKED R AND L RESPECTIVELY) 160 FT. TOTAL LENGTH
10	5	20	1010498-200	INSULATION-SLEEVING ELEC.
10	6	2	1016128-041	BAND-IDENTIFICATION
10	7	1	1016128-011	BAND-IDENTIFICATION
	8	1	1900959-003	ZIPPER TUBING ND1002155 TYPE 1 PLASTIC, FLEXIBLE, .88 DIA 16 FT TOTAL LENGTH
	9	AR	MIL-I-713	LACING TAPE TYPE P, CLASS 2, BLACK (ES-2752 NO. 18)
20	10			CONTACT, PINS
21	11			CONTACT, SOCKETS
22	12	AR	1897147-112, 4116	CABLE CLAMP SLEEVE

MANNED SPACECRAFT CENTER HOUSTON, TEXAS | SIZE A | 1900959
SCALE-NONE | REV LTR A | SHEET 5 OF 10

CONDUCTOR INDIVIDUAL LENGTH NUMBER	ITEM NO.	2>	FROM CUT WIRE OR SHIELD STRIP WIRE OR JACKET CIRCUIT POINT	3>	T1 T2	TERMINATION SPEC. 1> ITEM NO.	NO.	TO CUT WIRE OR SHIELD STRIP WIRE OR JACKET CIRCUIT POINT	3>	T1 T2	TERMINATION SPEC. 1> ITEM NO.	NO.
A 1	3		P1-H*	19N		11		P2-R*	19N		10	
A 2	3		P1-C*	19N		11		P2-C*	19N		10	
A 3	3		P1-D*	19N		11		P2-D*	19N		10	
A 4	3		P1-Y	19N		11		P2-H*	19N		10	
A 5	3		P1-Z	19N		11		P2-F*	19N		10	
A 6	3		P1-A*	19N		11		P2-A*	19N		10	
A 7	3		P1-V	19N		11		P2-V	19N		10	
A 8	3		P1-W	19N		11		P2-G*	19N		10	
A 9	3		P1-X	19N		11		P2-X	19N		10	
A 10	3		P1-G	19N		11		P2-G	19N		10	
A 11	3		P1-H	19N		11		P2-H	19N		10	
A 12	3		P1-J	19N		11		P2-J	19N		10	
A 13	3		P1-D	19N		11		P2-D	19N		10	
A 14	3		P1-E	19N		11		P2-E	19N		10	
A 15	3		P1-F	19N		11		P2-F	19N		10	
A 16	3		P1-A	19N		11		P2-A	19N		10	
A 17	3		P1-B	19N		11		P2-B	19N		10	
A 18	3		P1-C	19N		11		P2-C	19N		10	

1> THE STD CONDUCTOR TERMINATION FIGURES ARE PER
2> DIMENSIONS ARE IN INCHES AND TWO PLACE DECIMALS.

MANNED SPACECRAFT CENTER HOUSTON, TEXAS | SIZE A | 1900959
SCALE-NONE | REV LTR A | SHEET 6 OF 10

CONDUCTOR INDIVIDUAL LENGTH NUMBER	ITEM NO.	2>	FROM CUT WIRE OR SHIELD STRIP WIRE OR JACKET CIRCUIT POINT	3>	T1 T2	TERMINATION SPEC. 1> ITEM NO.	NO.	TO CUT WIRE OR SHIELD STRIP WIRE OR JACKET CIRCUIT POINT	3>	T1 T2	TERMINATION SPEC. 1> ITEM NO.	NO.
A 19	3		P1-R*	19N		11		P2-R*	19N		10	
A 20	3		P1-S*	19N		11		P2-S*	19N		10	
A 21	3		P1-N*	19N		11		P2-AA	19N		10	
A 22	3		P1-P*	19N		11		P2-JJ	19N		10	
A 23	4					A 5					A 5	
A 23L			P1-FF	19N		11		P2-Y	19N		10	
A 23R			P1-EE	19N		11		P2-PP	19N		10	
A 24	4					A 5					A 5	
A 24L			P1-MM	19N		11		P2-CC	19N		10	
A 24R			P1-GG	19N		11		P2-LL	19N		10	
A 25	4					A 5					A 5	
A 25L			P1-V*	19N		11		P2-DD	19N		10	
A 25R			P1-U*	19N		11		P2-MM	19N		10	
A 26	4					A 5					A 5	
A 26L			P1-X*	19N		11		P2-Z	19N		10	
A 26R			P1-W*	19N		11		P2-KK	19N		10	
A 27	4					A 5					A 5	
A 27L			P1-BB	19N		11		P2-W	19N		10	

1> THE STD CONDUCTOR TERMINATION FIGURES ARE PER
2> DIMENSIONS ARE IN INCHES AND TWO PLACE DECIMALS.

MANNED SPACECRAFT CENTER HOUSTON, TEXAS | SIZE A | 1900959
SCALE-NONE | REV LTR A | SHEET 7 OF 10

CONDUCTOR INDIVIDUAL LENGTH NUMBER	ITEM NO.	2>	FROM CUT WIRE OR SHIELD STRIP WIRE OR JACKET CIRCUIT POINT	3>	T1 T2	TERMINATION SPEC. 1> ITEM NO.	NO.	TO CUT WIRE OR SHIELD STRIP WIRE OR JACKET CIRCUIT POINT	3>	T1 T2	TERMINATION SPEC. 1> ITEM NO.	NO.
A 27R			P1-AA	19N		11		P2-MM	19N		10	
A 28	4					A 5					A 5	
A 28L			P1-DD	19N		11		P2-EE	19N		10	
A 28R			P1-CC	19N		11		P2-NN	19N		10	
A 29	4					A 5					A 5	
A 29L			P1-L	19N		11		P2-L	19N		10	
A 29R			P1-K	19N		11		P2-K	19N		10	
A 30	4					A 5					A 5	
A 30L			P1-N	19N		11		P2-N	19N		10	
A 30R			P1-M	19N		11		P2-M	19N		10	
A 31	4					A 5					A 5	
A 31L			P1-R	19N		11		P2-R	19N		10	
A 31R			P1-P	19N		11		P2-P	19N		10	
A 32	4					A 5					A 5	
A 32L			P1-T	19N		11		P2-T	19N		10	
A 32R			P1-S	19N		11		P2-S	19N		10	
A 33	3		P1-I*	19N		11		P2-I*	19N		10	
A 34	3		P1-J*	19N		11		P2-J*	19N		10	

1> THE STD CONDUCTOR TERMINATION FIGURES ARE PER
2> DIMENSIONS ARE IN INCHES AND TWO PLACE DECIMALS.

MANNED SPACECRAFT CENTER HOUSTON, TEXAS | SIZE A | 1900959
SCALE-NONE | REV LTR A | SHEET 8 OF 10

GHY CABLE W-22 A 1900959

CONDUCTOR NUMBERS	INDIVIDUAL LENGTHS ITEM NO.	FROM CUT WIRE OR SHIELD STRIP WIRE OR JACKET CIRCUIT POINT	T 2	SIZE	TERMINATION SPEC 1	NO.	TO CUT WIRE OR SHIELD STRIP WIRE OR JACKET CIRCUIT POINT	T 2	SIZE	TERMINATION SPEC 1	NO.
A 35	3	P1-K*		19N	11		P2-K*		19N	10	
A 36	3	P1-H*		19N	11		P2-H*		19N	10	
A 37	3	P1-M*		19N	11		P2-M*		19N	10	

1. THE STD CONDUCTOR TERMINATION FIGURES ARE PER
2. DIMENSIONS ARE IN INCHES AND TWO PLACE DECIMALS.

MANNED SPACECRAFT CENTER HOUSTON, TEXAS | SIZE A | 1900959

SCALE - NONE | REV LTR A | SHEET 9 OF 10

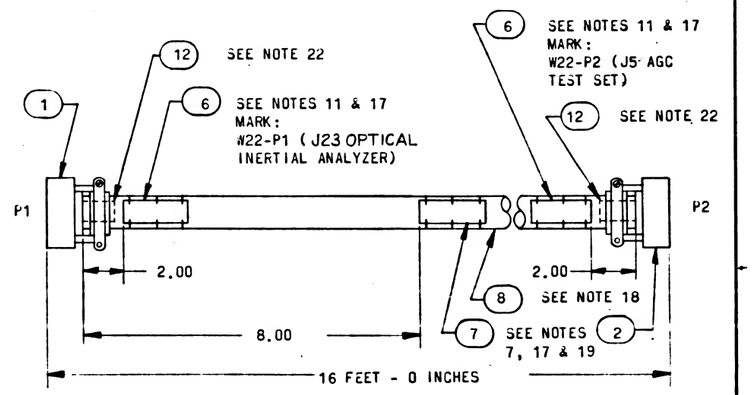

LOCATION TOLERANCE
(EXCEPT LENGTH):
+.50
-.50

MANNED SPACECRAFT CENTER HOUSTON, TEXAS | SIZE A | 1900959

SCALE - NONE | REV LTR B | SHEET 10 of 10

GENERAL NOTES

NOTES

1 SEE CONDUCTOR CHART

2 SEE CONDUCTOR CHART

3 INTERPRET DRAWING IN ACCORDANCE WITH STANDARDS PRESCRIBED BY MIL-D-70327.

4 MARK CONDUCTOR IDENTIFICATION ON SINGLE CONDUCTORS PER ND1002019 OMITTING ALL SUFFIX LETTERS EXCEPT A AND B.

5 SPACING OF CONDUCTOR IDENTIFICATION SHALL BE EVERY 15 INCHES MAX AND AT EACH TERMINATION.

6 SPIRALLING OF THE MARKING IS ALLOWED.

7 IDENTIFY USING DRAWING NO. AND REVISION LETTER PER MIL-STD-130 (ES-267). .12 INCH HIGH CHARACTERS BLACK.

8 Y OR N IN TINNED COLUMN INDICATES YES OR NO.

9 A LETTER WITH AN ASTERISK SUFFIX, INDICATES A LOWER CASE LETTER.

10 VENDOR ITEM - SEE SPECIFICATION CONTROL DRAWING.

11 MARK IDENTIFICATION BAND WITH REFERENCE DESIGNATION AS NOTED .12 INCH HIGH COLOR BLACK, HOT IMPRESSION STAMPING PER ND1002019. CENTRALIZE.

MANNED SPACECRAFT CENTER HOUSTON, TEXAS	SIZE A	1900959	
SCALE - NONE	REV LTR +		SHEET 2 of 10

MIL 2084 4-63

GENERAL NOTES

NOTES

12 MARK SLEEVING WITH REFERENCE DESIGNATIONS AS SHOWN .12 INCH HIGH, COLOR BLACK PER ND1002019.

13 MARK SLEEVING OF MULTI-CONDUCTORS WITH THE CONDUCTOR NUMBER .12 INCH HIGH, COLOR BLACK, PER ND1002019 WHEN SLEEVING ITEM NUMBERS FOLLOW AN A OR T IN THE ACCESSORIES ITEM NUMBER FIELD.

14 A OR T PREFIX IN THE ACCESSORIES ITEM NUMBER COLUMN INDICATES THE READING POSITION AWAY FROM TERMINATION OR TOWARD TERMINATION RESPECTIVELY, OF THE WIRE MARKER SLEEVE.

15 THE SUFFIX LETTER OF A CONDUCTOR IDENTIFICATION NUMBER INDICATES CONDUCTOR SHIELDING, COLOR, OR MARKING.
- A - FROM END SHIELD
- L - WHITE WITH BLUE TRACER
- R - WHITE WITH RED TRACER

16 ASSEMBLE CONTACTS IN ALL CONNECTOR GROMMET HOLES.

17 SECURE TO CABLE USING ITEM 9. MARKING TO READ AWAY FROM CONNECTOR.

18 SEAL ZIPPER TUBING PER ND 1002153.

19 SERIALIZE PER ND 1002023.

MANNED SPACECRAFT CENTER HOUSTON, TEXAS	SIZE A	1900959	
SCALE - NONE	REV LTR +		SHEET 3 of 10

MIL 2084 4-63

REVISIONS			
DESCRIPTION	DATE	APPROVAL	

APPLICATION		
NEXT ASSY	USED ON	SYM
1900005-011	1900005-011	

FOR INFORMATION ONLY

CLASS B RELEASE TDR No. 04812 DATE 26 Jan 63

REV										
SHEET										
REV STATUS	+	+	+	+	+	+	+	+	+	+
OF SHEETS	SHEET 1	2	3	4	5	6	7	8	9	10

MANNED SPACECRAFT CENTER HOUSTON, TEXAS

AC SPARK PLUG DIVISION, GMC MILWAUKEE, WISCONSIN

ACSP PN

CABLE INTERCONNECT W22 G&N TESTING

DRAWN T. Kenney DATE 22 OCT 62

CHECKED T. Kenney DATE 23 5 NOV 63

APPROVAL N. Graham 5 NOV 63

APPROVAL L. Schuman 11/27/63

NASA APPROVAL A. J. Ohs 11-26-63

MIT APPROVAL W. Lyle 26 NOV 63

CODE IDENT NO. | SIZE A | 1900959 | REV +

CONTRACT NAS9-497 | SCALE NONE | SHEET 1 OF 10

GENERAL NOTES

TOLERANCE CHART, UNLESS OTHERWISE SPECIFIED ---

APPLICABLE LENGTH FOR WIRE OR CABLE, STRIP WIRE, STRIP JACKET, CUT WIRE OR CUT SHIELD	TOLERANCE				
	WIRE OR CABLE	STRIP WIRE	STRIP JACKET	CUT WIRE	CUT SHIELD
UNDER 1 INCH	+ .06-.00	+.03-.00	+.06-.06	+.06-.06	+.06-.06
1 INCH TO 6 INCHES	+ .50-.00	+.06-.00	+.25-.25	+.25-.25	+.25-.25
6 INCHES TO 6 FEET	+1.00-.00		+.50-.50	+.50-.50	+.50-.50
OVER 6 FEET	+2.00-.00				

MANNED SPACECRAFT CENTER HOUSTON, TEXAS	SIZE A	1900959	
SCALE - NONE	REV LTR +		SHEET 4 of 10

MIL 2084 4-63

INCHES 0 1 2

PHOTOGRAPHIC SCALE ONLY

GHY CABLE + 1900959

CONDUCTOR INDIVIDUAL LENGTH NUMBER	ITEM NO. (2)	FROM CUT WIRE OR SHIELD STRIP WIRE OR JACKET CIRCUIT POINT (2)	T I N (2)	TERMINATION SPEC. (1) ITEM NO.	NO.	TO CUT WIRE OR SHIELD STRIP WIRE OR JACKET CIRCUIT POINT (2)	T I N (2)	TERMINATION SPEC (1) ITEM NO.	NO.
A 1	3	P1-B*	22N			P2-B*	22N		
A 2	3	P1-C*	22N			P2-C*	22N		
A 3	3	P1-D*	22N			P2-D*	22N		
A 4	3	P1-Y	22N			P2-H*	22N		
A 5	3	P1-Z	22N			P2-F*	22N		
A 6	3	P1-A*	22N			P2-A*	22N		
A 7	3	P1-V	22N			P2-V	22N		
A 8	3	P1-W	22N			P2-G*	22N		
A 9	3	P1-X	22N			P2-X	22N		
A 10	3	P1-G	22N			P2-G	22N		
A 11	3	P1-H	22N			P2-H	22N		
A 12	3	P1-J	22N			P2-J	22N		
A 13	3	P1-D	22N			P2-D	22N		
A 14	3	P1-E	22N			P2-E	22N		
A 15	3	P1-F	22N			P2-F	22N		
A 16	3	P1-A	22N			P2-A	22N		
A 17	3	P1-B	22N			P2-B	22N		
A 18	3	P1-C	22N			P2-C	22N		

(1) THE STD CONDUCTOR TERMINATION FIGURES ARE PER
(2) DIMENSIONS ARE IN INCHES AND TWO PLACE DECIMALS.

MANNED SPACECRAFT CENTER HOUSTON, TEXAS | SIZE A | 1900959
SCALE - NONE | REV LTR + | SHEET 6 OF 10

MIL 2085 - 4-63 WIR

GHY CABLE + 1900959

CONDUCTOR INDIVIDUAL LENGTH NUMBER	ITEM NO. (2)	FROM CUT WIRE OR SHIELD STRIP WIRE OR JACKET CIRCUIT POINT (2)	T I N (2)	TERMINATION SPEC. (1) ITEM NO.	NO.	TO CUT WIRE OR SHIELD STRIP WIRE OR JACKET CIRCUIT POINT (2)	T I N (2)	TERMINATION SPEC (1) ITEM NO.	NO.
A 19	3	P1-R*	22N			P2-R*	22N		
A 20	3	P1-S*	22N			P2-S*	22N		
A 21	3	P1-N*	22N			P2-AA	22N		
A 22	3	P1-P*	22N			P2-JJ	22N		
A 23	4			A 5				A 5	
A 23L		P1-FF	22N			P2-Y	22N		
A 23R		P1-EE	22N			P2-PP	22N		
A 24	4			A 5				A 5	
A 24L		P1-HH	22N			P2-CC	22N		
A 24R		P1-GG	22N			P2-LL	22N		
A 25	4			A 5				A 5	
A 25L		P1-V*	22N			P2-DD	22N		
A 25R		P1-U*	22N			P2-MM	22N		
A 26	4			A 5				A 5	
A 26L		P1-X*	22N			P2-Z	22N		
A 26R		P1-W*	22N			P2-KK	22N		
A 27	4			A 5				A 5	
A 27L		P1-BB	22N			P2-W	22N		

(1) THE STD CONDUCTOR TERMINATION FIGURES ARE PER
(2) DIMENSIONS ARE IN INCHES AND TWO PLACE DECIMALS.

MANNED SPACECRAFT CENTER HOUSTON, TEXAS | SIZE A | 1900959
SCALE - NONE | REV LTR + | SHEET 7 OF 10

MIL 2085 - 4-63 WIR

GHY CABLE + 1900959

CONDUCTOR INDIVIDUAL LENGTH NUMBER	ITEM NO. (2)	FROM CUT WIRE OR SHIELD STRIP WIRE OR JACKET CIRCUIT POINT (2)	T I N (2)	TERMINATION SPEC. (1) ITEM NO.	NO.	TO CUT WIRE OR SHIELD STRIP WIRE OR JACKET CIRCUIT POINT (2)	T I N (2)	TERMINATION SPEC (1) ITEM NO.	NO.
A 27R		P1-AA	22N			P2-HH	22N		
A 28	4			A 5				A 5	
A 28L		P1-DD	22N			P2-EE	22N		
A 28R		P1-CC	22N			P2-NN	22N		
A 29	4			A 5				A 5	
A 29L		P1-L	22N			P2-L	22N		
A 29R		P1-K	22N			P2-K	22N		
A 30	4			A 5				A 5	
A 30L		P1-N	22N			P2-N	22N		
A 30R		P1-M	22N			P2-M	22N		
A 31	4			A 5				A 5	
A 31L		P1-R	22N			P2-R	22N		
A 31R		P1-P	22N			P2-P	22N		
A 32	4			A 5				A 5	
A 32L		P1-T	22N			P2-T	22N		
A 32R		P1-S	22N			P2-S	22N		
A 33	3	P1-I*	22N			P2-I*	22N		
A 34	3	P1-J*	22N			P2-J*	22N		

(1) THE STD CONDUCTOR TERMINATION FIGURES ARE PER
(2) DIMENSIONS ARE IN INCHES AND TWO PLACE DECIMALS.

MANNED SPACECRAFT CENTER HOUSTON, TEXAS | SIZE A | 1900959
SCALE - NONE | REV LTR + | SHEET 8 OF 10

MIL 2085 - 4-63 WIR

LIST OF MATERIAL

SEE NOTE	ITEM	REQ'D	PART NUMBER	DESCRIPTION
17	1	1	MS3126F-22-55SZ	(1897046-554) CONNECTOR
17	2	1	MS3126F-24-61P	(1897047-610) CONNECTOR
	3	1	1900959-001	WIRE ND 1002181 TYPE 1, CLASS 1, 20 AWG, WHT, 432 FT TOTAL LENGTH
	4	1	1900959-002	WIRE ND 1002181 TYPE 2, CLASS 1, T2, 20 AWG, WHT (CONDUCTORS MARKED R & L RESPECTIVELY) 160 FT TOTAL LENGTH
10	5	20	1010490-200	INSULATION-SLEEVING ELEC
10	6	2	1016128-041	BAND-IDENTIFICATION
10	7	1	1016128-011	BAND-IDENTIFICATION
	8	1	1900959-003	ZIPPER TUBING ND 1002155 TYPE 1 PLASTIC, FLEXIBLE, .62 DIA 16 FT TOTAL LENGTH
	9	AR	MIL-T-713	LACING TAPE TYPE P, CLASS 2 BLACK (ES-2732 (NO. 18)

MANNED SPACECRAFT CENTER HOUSTON, TEXAS | SIZE A | 1900959
SCALE - NONE | REV LTR + | SHEET 5 of 10

MIL 2084 4-63

INCHES 0 1 2
PHOTOGRAPHIC SCALE ONLY

GHY CABLE + 1900959

CONDUCTOR INDIVIDUAL LENGTH NUMBER	ITEM NO.	2	FROM CUT WIRE OR SHIELD STRIP WIRE OR JACKET CIRCUIT POINT	2	TIN	2	TERMINATION SPEC. ITEM NO.	1	NO.	TO CUT WIRE OR SHIELD STRIP WIRE OR JACKET CIRCUIT POINT	2	TIN	2	TERMINATION SPEC ITEM NO.	1	NO.
A 35	3		P1-K*		22N					P2-K*		22N				
A 36	3		P1-L*		22N					P2-L*		22N				
A 37	3		P1-M*		22N					P2-M*		22N				

1 THE STD CONDUCTOR TERMINATION FIGURES ARE PER

2 DIMENSIONS ARE IN INCHES AND TWO PLACE DECIMALS.

MANNED SPACECRAFT CENTER HOUSTON, TEXAS	SIZE A	1900959
SCALE - NONE	REV LTR +	SHEET 9 OF 10

MIL 2088 - 4-63 WIR

PHOTOGRAPHIC SCALE ONLY INCHES 0 1 2

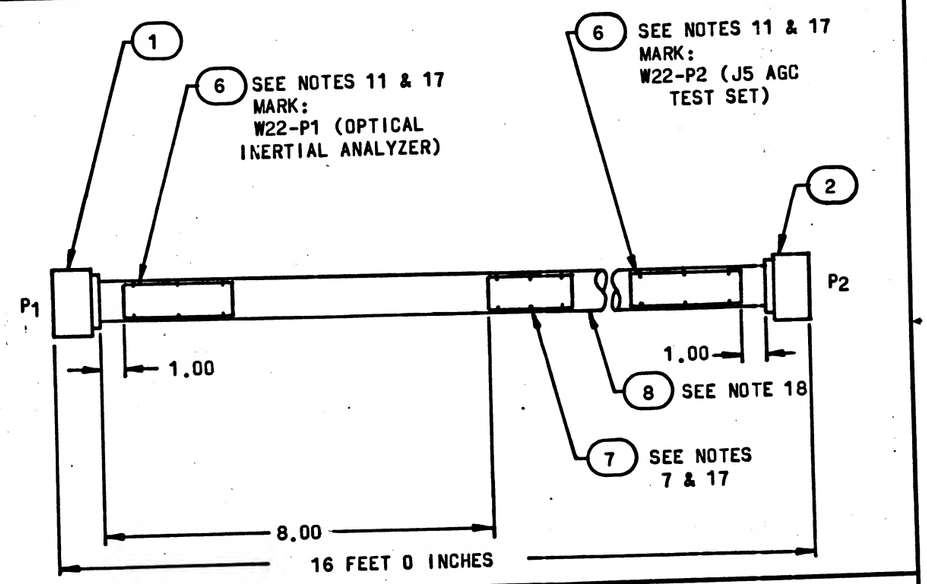

MANNED SPACECRAFT CENTER HOUSTON, TEXAS	SIZE A	1900959
SCALE - NONE	REV LTR +	SHEET 10

MIL 2084 4-63

PENNANT NOTE — GENERAL NOTES

1. SEE CONDUCTOR CHART, PENNANT NOTE 1.
2. SEE CONDUCTOR CHART, PENNANT NOTE 2.
3. INTERPRET DRAWING IN ACCORDANCE WITH STANDARDS PRESCRIBED BY MIL-D-70327.
4. MARK CONDUCTOR IDENTIFICATION ON SINGLE CONDUCTORS PER ND1002019 OMITTING ALL SUFFIX LETTERS EXCEPT A AND B.
5. SPACING OF CONDUCTOR IDENTIFICATION SHALL BE EVERY 15 INCHES MAX. AND AT EACH TERMINATION.
6. SPIRALLING OF THE MARKING IS ALLOWED.
7. IDENTIFY USING DRAWING NO. AND REVISION LETTER PER MIL-STD-130 (ES-267). .12 INCH HIGH CHARACTERS BLACK.
8. Y OR N IN TINNED COLUMN INDICATES YES OR NO.
9. A LETTER WITH AN ASTERISK SUFFIX INDICATES A LOWER CASE LETTER.
10. VENDOR ITEM - SEE SPECIFICATION CONTROL DRAWING.
11. MARK IDENTIFICATION BAND WITH REFERENCE DESIGNATION AS NOTED .12 INCH HIGH COLOR BLACK, HOT IMPRESSION STAMPING PER ND1002019. CENTRALIZE.
12. SOLDER PER MIL-STD-440 USING ITEMS 9 AND 10.
13. SECURE TO CABLE USING ITEM 11. MARKING TO READ AWAY FROM CONNECTOR.
14. SEAL ZIPPER TUBING PER ND1002153.
15. SERIALIZE PER ND1002023.

PENNANT NOTE — GENERAL NOTES

TOLERANCE CHART, UNLESS OTHERWISE SPECIFIED ---

APPLICABLE LENGTH FOR WIRE OR CABLE, STRIP WIRE, STRIP JACKET, CUT WIRE OR CUT SHIELD.	TOLERANCE				
	WIRE OR CABLE	STRIP WIRE	STRIP JACKET	CUT WIRE	CUT SHIELD
UNDER 1 INCH	+ .06-.00	+.03-.00	+.06-.06	+.06-.06	+.06-.06
1 INCH TO 6 INCHES	+ .50-.00	+.06-.00	+.25-.25	+.25-.25	+.25-.25
6 INCHES TO 6 FEET	+1.00-.00		+.50-.50	+.50-.50	+.50-.50
OVER 6 FEET	+2.00-.00				

PENNANT NOTE — LIST OF MATERIALS

NOTE	ITEM	QTY	PART NO	DESCRIPTION
	1	1	1900960-001	WIRE ND1002181 TYPE 1, CLASS 1, 12AWG, WHT. 68 FT. TOTAL LENGTH
	2	1	1900960-002	WIRE ND1002181 TYPE 1, CLASS 1, 14AWG, WHT. 85 FT. TOTAL LENGTH
	3	1	1900960-003	WIRE ND1002181 TYPE 1, CLASS 1, 16AWG, WHT. 51 FT. TOTAL LENGTH
	4	1	MS3106R28-20PW (1897104-201)	CONNECTOR, PLUG
	5	1	MS3106R28-20SW (1897105-201)	CONNECTOR, PLUG
10	6	2	1016128-041	BAND-IDENTIFICATION
10	7	1	1016128-011	BAND-IDENTIFICATION
	8	1	1900960-004	ZIPPER TUBING ND1002155 TYPE 1, PLASTIC, FLEXIBLE, .75 DIA. 17 FT. TOTAL LENGTH
	9	AR	QQ-S-571	SOLDER SN60 (ES-2175 ALLOY 1)
	10	AR	QQ-S-571	FLUX TYPE AR (ES-2175 TYPE 1 OR 2) OR MIL-F-14256 FLUX (ES-2798)
	11	AR	MIL-T-713	LACING TAPE TYPED, CLASS 2, BLACK (ES-2732 NO. 18)
10	12	2	1016237-280	CLAMP-STRAIN RELIEF
10	13	8	1015864-165	INSULATION SLEEVING ELECTRICAL
10	14	10	1015864-166	INSULATION SLEEVING ELECTRICAL
10	15	6	1015864-167	INSULATION SLEEVING ELECTRICAL

REVISIONS

SYM	DESCRIPTION	DATE	APPROVAL
A	CHANGE IN ACCORDANCE WITH CM 123623 09124	6 FEB 64	GG / J.E.G.

APPLICATION

NEXT ASSY	USED ON
1901308	1900005-011

FOR INFORMATION ONLY

CLASS B RELEASE TDR No. 04812 DATE 26 Jan 63

REV	A	A	A	A	A	A
SHEET	1	2	3	4	5	6

REV STATUS REV A
OF SHEETS SHEET 1 2

AC SPARK PLUG DIVISION, GMC
MILWAUKEE, WISCONSIN

ACSP PN

DRAWN — DATE 26 OCT 62
CHECKED — 5 Nov 62
APPROVAL — 26 Jan 63
APPROVAL — 26 Jan 63

MANNED SPACECRAFT CENTER HOUSTON, TEXAS

CABLE INTERCONNECT W45
OSS TESTING

CODE IDENT NO. | SIZE A | 1900960 | REV A

NASA APPROVAL — 11-26-63
MIT APPROVAL — 11-26-63

CONTRACT NAS9-497 | SCALE NONE | SHEET 1 OF 6

GHX CABLE W-45 A 1900960

CONDUCTOR NUMBER	INDIVIDUAL LENGTH	ITEM NO.	3	FROM CUT WIRE OR SHIELD / STRIP WIRE OR JACKET / CIRCUIT POINT	3	T I N	2	TERMINATION SPEC 1	ITEM NO.	NO.	TO CUT WIRE OR SHIELD / STRIP WIRE OR JACKET / CIRCUIT POINT	3	T I N	2	TERMINATION SPEC 1	ITEM NO.	NO.
A	1	2		P1-A	31	Y		14			P2-A	31	Y		14		
A	2	2		P1-B	31	Y		14			P2-B	31	Y		14		
A	3	1		P1-E	31	Y		13			P2-E	31	Y		13		
A	4	2		P1-C	31	Y		14			P2-C	31	Y		14		
A	5	2		P1-D	31	Y		14			P2-D	31	Y		14		
A	6	2		P1-F	31	Y		14			P2-F	31	Y		14		
A	7	1		P1-G	31	Y		13			P2-G	31	Y		13		
A	8	1		P1-H	31	Y		13			P2-H	31	Y		13		
A	9	1		P1-J	31	Y		13			P2-J	31	Y		13		
A	10	3		P1-K	19	Y		15			P2-K	19	Y		15		
A	11	3		P1-L	19	Y		15			P2-L	19	Y		15		
A	12	3		P1-M	19	Y		15			P2-M	19	Y		15		

1 THE STD CONDUCTOR TERMINATION FIGURES ARE PER

2 DIMENSIONS ARE IN INCHES AND TWO PLACE DECIMALS.

MANNED SPACECRAFT CENTER HOUSTON, TEXAS | SIZE A | 1900960

SCALE - NONE | REV LTR A | SHEET 5 OF 6

MIL 2048 - 4-63 WIR

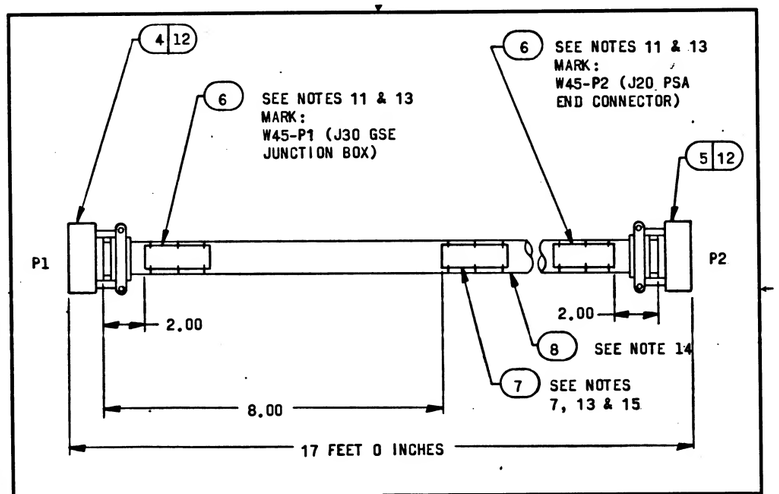

LOCATION TOLDERANCE (EXCEPT LENGTH): $^{+.50}_{-.50}$

MANNED SPACECRAFT CENTER HOUSTON, TEXAS | SIZE A | 1900960

SCALE - NONE | REV LTR A | SHEET 6 of 6

MIL 2048 4-63

APPLICATION		REVISIONS			
NEXT ASSY	USED ON	SYM	DESCRIPTION	DATE	APPROVAL
1901308	1900005-011 (N)	A	CHANGE IN ACCORDANCE WITH CM 193623 09124	6 FEB 64	GG / J.E.G.
		B	REPLACED WITH CHANGE BY REV C PER TDRR 21052	27 JUL 65	G.D.R. / EF

FOR INFORMATION ONLY

CLASS B RELEASE TDR No. 04812 DATE 26 Nov 63

(B) REPLACED WITH CHANGE BY REV C

REV																							
SHEET																							
REV STATUS	REV	B	B	B	B	B	B																
OF SHEETS	SHEET	1	2	3	4	5	6																

AC SPARK PLUG DIVISION, GMC MILWAUKEE, WISCONSIN	MANNED SPACECRAFT CENTER HOUSTON, TEXAS
ACSP PN	
DRAWN T. Kornetka DATE 22 OCT 63	CABLE INTERCONNECT W45 OSS TESTING
CHECKED R. Hermann 5 NOV 63	
APPROVAL R. Allnquist 5 NOV 63	
APPROVAL L. Gelman 11/22/63	
NASA APPROVAL W. J. Allen 11-26-63	CODE IDENT NO. / SIZE A / 1900960 / REV B
MIT APPROVAL W. Hopfer 26 Nov 1963	
CONTRACT NAS9-497	SCALE NONE / SHEET 1 OF 6

GENERAL NOTES

NOTES

1 SEE CONDUCTOR CHART
2 SEE CONDUCTOR CHART
3 INTERPRET DRAWING IN ACCORDANCE WITH STANDARDS PRESCRIBED BY MIL-D-70327.
4 MARK CONDUCTOR IDENTIFICATION ON SINGLE CONDUCTORS PER ND1002019 OMITTING ALL SUFFIX LETTERS EXCEPT A AND B.
5 SPACING OF CONDUCTOR IDENTIFICATION SHALL BE EVERY 15 INCHES MAX AND AT EACH TERMINATION.
6 SPIRALLING OF THE MARKING IS ALLOWED.
7 IDENTIFY USING DRAWING NO. AND REVISION LETTER PER MIL-STD-130 (ES-267). .12 INCH HIGH CHARACTERS BLACK.
8 Y OR N IN TINNED COLUMN INDICATES YES OR NO.
9 A LETTER WITH AN ASTERISK SUFFIX, INDICATES A LOWER CASE LETTER.
10 VENDOR ITEM - SEE SPECIFICATION CONTROL DRAWING.
11 MARK IDENTIFICATION BAND WITH REFERENCE DESIGNATION AS NOTED .12 INCH HIGH COLOR BLACK, HOT IMPRESSION STAMPING PER ND1002019. CENTRALIZE.
12 SOLDER PER MIL-STD-440 USING ITEMS 9 AND 10.
13 SECURE TO CABLE USING ITEM 11. MARKING TO READ AWAY FROM CONNECTOR.
14 SEAL ZIPPER TUBING PER ND 1002153.
15 SERIALIZE PER ND 1002023.

MANNED SPACECRAFT CENTER HOUSTON, TEXAS	SIZE A	1900960
SCALE - NONE	REV LTR +	SHEET 2 of 6

MIL 2084 4-63

GENERAL NOTES

TOLERANCE CHART, UNLESS OTHERWISE SPECIFIED ---

APPLICABLE LENGTH FOR WIRE OR CABLE, STRIP WIRE, STRIP JACKET, CUT WIRE OR CUT SHIELD	TOLERANCE				
	WIRE OR CABLE	STRIP WIRE	STRIP JACKET	CUT WIRE	CUT SHIELD
UNDER 1 INCH	+ .06-.00	+.03-.00	+.06-.06	+.06-.06	+.06-.06
1 INCH TO 6 INCHES	+ .50-.00	+.06-.00	+.25-.25	+.25-.25	+.25-.25
6 INCHES TO 6 FEET	+1.00-.00		+.50-.50	+.50-.50	+.50-.50
OVER 6 FEET	+2.00-.00				

MANNED SPACECRAFT CENTER HOUSTON, TEXAS	SIZE A	1900960
SCALE - NONE	REV LTR +	SHEET 3 of 6

MIL 2084 4-63

LIST OF MATERIAL

SEE NOTES	ITEM	REQ'D	PART NUMBER	DESCRIPTION
	1	1	1900960-001	WIRE ND 1002181 TYPE 1, CLASS 1, 12 AWG, WHT, 68 FT TOTAL LENGTH
	2	1	1900960-002	WIRE ND 1002181 TYPE 1, CLASS 1, 14 AWG, WHT, 85 FT TOTAL LENGTH
	3	1	1900960-003	WIRE ND 1002181 TYPE 1, CLASS 1, 16 AWG, WHT, 51 FT TOTAL LENGTH
	4	1	MS3106R28-20PW	(1897104-201) CONNECTOR, PLUG
	5	1	MS3106R28-20SW	(1897105-201) CONNECTOR, PLUG
10	6	2	1016128-041	BAND-IDENTIFICATION
10	7	1	1016128-011	BAND-IDENTIFICATION
	8	1	1900960-004	ZIPPER TUBING ND 1002155 TYPE 1, PLASTIC, FLEXIBLE, 62 DIA 17 FT TOTAL LENGTH
	9	AR	QQ-S-571	SOLDER SN60 (ES-2175 ALLOY 1)
	10	AR	QQ-S-571 / MIL-F-14256	FLUX TYPE AR (ES-2175 TYPE 1 OR 2) OR FLUX (ES-2798)
	11	AR	MIL-T-713	LACING TAPE TYPED, CLASS 2, BLACK (ES-2732 NO. 18)
10	12	2	1016237-280	CLAMP-STRAIN RELIEF

MANNED SPACECRAFT CENTER HOUSTON, TEXAS	SIZE A	1900960
SCALE - NONE	REV LTR +	SHEET 4 of 6

MIL 2084 4-63

REVISIONS

SYM	DESCRIPTION	DATE	APPROVAL

APPLICATION

NEXT ASSY	USED ON
1900005-011	1900005-011

FOR INFORMATION ONLY

CLASS B RELEASE TDR No. 0481 2 DATE 26 Jan 63

REV	SHEET	REV STATUS	OF SHEETS
		+	1
		+	2
		+	3
		+	4
		+	5
		+	6

MANNED SPACECRAFT CENTER HOUSTON, TEXAS

CABLE INTERCONNECT W45
OSS TESTING

AC SPARK PLUG DIVISION, GMC
MILWAUKEE, WISCONSIN

ACSP PN

DRAWN / CHECKED / APPROVAL / APPROVAL — DATE 26 Jan 63 / 5 Feb 63 / 5 Feb 63 / 1-26-63

NASA APPROVAL / MIT APPROVAL — 1-26-63 / 26 Jan 63

CONTRACT NAS9-497

CODE IDENT NO. 1900960 | SIZE A | REV +

SCALE NONE | SHEET 1 OF 6

INCHES 0 1 2
PHOTOGRAPHIC SCALE ONLY

GHX CABLE W45 + 1900960

CONDUCTOR INDIVIDUAL LENGTH NUMBER	ITEM NO.	3	FROM CUT WIRE OR SHIELD STRIP WIRE OR JACKET CIRCUIT POINT	2	TIN	2	TERMINATION SPEC. 1 ITEM NO.	NO.	TO CUT WIRE OR SHIELD STRIP WIRE OR JACKET CIRCUIT POINT	2	TIN	2	TERMINATION SPEC 1 ITEM NO.	NO.
A 1	2		P1-A	22	Y				P2-A	22	Y			
A 2	2		P1-B	22	Y				P2-B	22	Y			
A 3	1		P1-E	22	Y				P2-E	22	Y			
A 4	2		P1-C	22	Y				P2-C	22	Y			
A 5	2		P1-D	22	Y				P2-D	22	Y			
A 6	2		P1-F	22	Y				P2-F	22	Y			
A 7	1		P1-G	22	Y				P2-G	22	Y			
A 8	1		P1-H	22	Y				P2-H	22	Y			
A 9	1		P1-J	22	Y				P2-J	22	Y			
A 10	3		P1-K	22	Y				P2-K	22	Y			
A 11	3		P1-L	22	Y				P2-L	22	Y			
A 12	3		P1-M	22	Y				P2-M	22	Y			

1 THE STD CONDUCTOR TERMINATION FIGURES ARE PER
2 DIMENSIONS ARE IN INCHES AND TWO PLACE DECIMALS.

MANNED SPACECRAFT CENTER HOUSTON, TEXAS | SIZE A | 1900960

SCALE - NONE | REV LTR + | SHEET 5 OF 6

MIL 2085 - 4-63 WIR

PHOTOGRAPHIC SCALE ONLY 0 1 2 INCHES

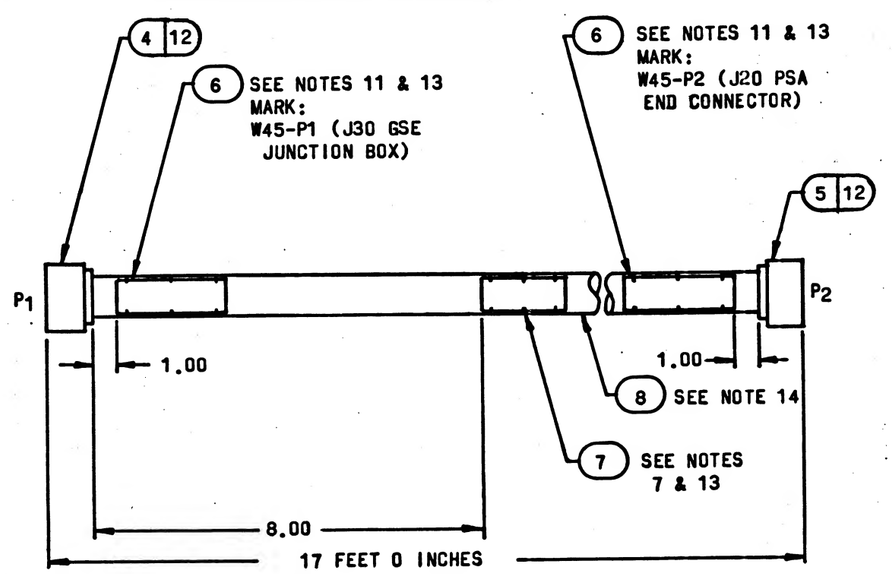

MANNED SPACECRAFT CENTER HOUSTON, TEXAS | SIZE A | 1900960

SCALE - NONE | REV LTR + | SHEET 6 of 6

MIL 2084 4-63

APPLICATION		REVISIONS			
NEXT ASSY	USED ON	SYM	DESCRIPTION	DATE	APPROVAL
1901308	1900005-011	A	CHANGE IN ACCORDANCE WITH CM 193447	5 FEB 64	GG / EF
		B	CHANGE IN ACCORDANCE WITH CM 193448 136656	5 FEB 64	GG / EF
		C	CHANGE IN ACCORDANCE WITH CM 200711 138659	18 MAR 64	Tomas / JRB 3/16

FOR INFORMATION ONLY

CLASS B RELEASE TDR No. 04812 **DATE** 26 Feb 63

REV							
SHEET							
REV STATUS OF SHEETS	REV	C	C	B	C	C	C
	SHEET	1	2	3	4	5	6	7

AC SPARK PLUG DIVISION, GMC
MILWAUKEE, WISCONSIN

MANNED SPACECRAFT CENTER
HOUSTON, TEXAS

ACSP PN

DRAWN — DATE 26 Oct 63
CHECKED — 5 Nov 63
APPROVAL — 5 Nov 63
APPROVAL — 1/24/63

CABLE INTERCONNECT W41
TESTING

NASA APPROVAL — 11-26-63
MIT APPROVAL — 26 Nov 63

CONTRACT NAS 9-497

CODE IDENT NO.

SIZE A

1900961

REV C

SCALE NONE

SHEET 1 OF 7

GMH CABLE W-41 C 1900961

PENNANT NOTE — GENERAL NOTES

16 MARK SLEEVING WITH REFERENCE DESIGNATIONS AS SHOWN .12 INCH HIGH, COLOR BLACK PER ND102019.

17 MARK SLEEVING OF MULTI-CONDUCTORS WITH THE CONDUCTOR NUMBER .12 INCH HIGH, COLOR BLACK, PER ND102019 WHEN SLEEVING ITEM NUMBERS FOLLOW AN A OR T IN THE ACCESSORIES ITEM NUMBER FIELD.

18 A OR T PREFIX IN THE ACCESSORIES ITEM NUMBER COLUMN INDICATES THE HEADING POSITION AWAY FROM TERMINATION OR TOWARD TERMINATION RESPECTIVELY, OF THE WIRE MARKER SLEEVE.

19 THE SUFFIX LETTER OF A CONDUCTOR IDENTIFICATION NUMBER INDICATES CONDUCTOR SHIELDING, COLOR, OR MARKING.
A — FROM END SHIELD
B — WHITE TRACER
L — WHITE WITH BLUE TRACER

TOLERANCE CHART, UNLESS OTHERWISE SPECIFIED —

APPLICABLE LENGTH FOR WIRE OR CABLE, STRIP WIRE, STRIP JACKET, CUT WIRE OR CUT SHIELD.	TOLERANCE: WIRE OR CABLE	STRIP WIRE	JACKET	CUT WIRE	SHIELD
UNDER 1 INCH	+.04-.00	+.03-.00	+.06-.06	+.06-.06	+.06-.06
1 INCH TO 6 INCHES	+.50-.00	+.06-.00	+.25-.25	+.25-.25	+.25-.25
6 INCHES TO 6 FEET	+1.00-.00		+.50-.50	+.50-.50	+.50-.50
OVER 6 FEET	+2.00-.00				

MANNED SPACECRAFT CENTER HOUSTON, TEXAS — SIZE A — 1900961 — SCALE-NONE — REV LTR B — SHEET 3 OF 7

GMH CABLE W-41 C 1900961

PENNANT NOTE — GENERAL NOTES

1 SEE CONDUCTOR CHART, PENNANT NOTE 1.

2 SEE CONDUCTOR CHART, PENNANT NOTE 2.

3 INTERFACE DRAWING IN ACCORDANCE WITH STANDARDS PRESCRIBED BY MIL-D-70327.

4 MARK CONDUCTOR IDENTIFICATION ON SINGLE CONDUCTORS PER ND102019 OMITTING ALL SUFFIX LETTERS EXCEPT A AND B.

5 SPACING OF CONDUCTOR IDENTIFICATION SHALL BE EVERY 15 INCHES MAX. AND AT EACH TERMINATION.

6 SPIRALLING OF THE MARKING IS ALLOWED.

7 IDENTIFY WIRING DRAWING NO. AND REVISION LETTER PER MIL-STD-130 (ES-267). .12 INCH HIGH CHARACTERS WHITE.

8 Y OR N IN TINNED COLUMN INDICATES YES OR NO.

9 A LETTER WITH AN ASTERISK SUFFIX INDICATES A LOWER CASE LETTER.

10 VENDOR ITEM - SEE SPECIFICATION CONTROL DRAWING.

11 MARK IDENTIFICATION BAND WITH REFERENCE DESIGNATION AS NOTED .12 INCH HIGH COLOR WHITE, HOT IMPRESSION STAMPING PER ND102019. CENTRALIZE.

12 SOLDER PER MIL-STD-440 USING ITEMS 7 AND 8.

13 SECURE TO CABLE USING ITEM 10. MARKING TO READ AWAY FROM CONNECTOR.

14 SEAL ZIPPER TUBING PER ND102153.

15 SERIALIZE PER ND102023.

MANNED SPACECRAFT CENTER HOUSTON, TEXAS — SIZE A — 1900961 — SCALE-NONE — REV LTR C — SHEET 2 OF 7

GMH CABLE W-41 C 1900961

PENNANT NOTE — LIST OF MATERIALS

ITEM	QTY	PART NO	DESCRIPTION
1	1	1900961-001	WIRE, ND102181 TYPE 1, CLASS 1, 16AWG, WHT, 32 FT. TOTAL LENGTH
2	1	1900961-002	WIRE, ND102181 TYPE 1, CLASS 1, 12AWG, WHT, 144 FT. TOTAL LENGTH
3	1	MS3106R28-20P	(189710A-2001) CONNECTOR-PLUG
4	1	MS3106R28-20S	(189710S-2001) CONNECTOR-PLUG
5	2	1016128-041	BAND-IDENTIFICATION
6	1	1016128-011	BAND-IDENTIFICATION
7	AR	QQ-S-571	SOLDER SN60 (ES-2169 ALLOY 1)
8	AR	QQ-S-571	FLUX TYPE AR (ES-2175 TYPE 1 OR 2) OR MIL-F-14256 FLUX (ES-2798)
9	1	1900961-003	ZIPPER TUBING ND102155 TYPE 1, PLASTIC, FLEXIBLE .75 DIA. 16 FT. TOTAL LENGTH
10	AR	MIL-T-713	LACING TAPE TYPE P, CLASS 2, BLACK (ES-2732 NO. 18)
11	2	1016237-280	CLAMP-STRAIN RELIEF
12	1	1900961-004	WIRE ND102181 TYPE 2 CLASS 4 16AWG WHT JACKET WHT/BLU, WHT/RED 16 FT TOTAL LENGTH
13	1	1000243-023	FERRULE ELECT. CONDUCTOR
14	1	1000242-018	FERRULE ELECT. CONDUCTOR
15	1	1900961-005	WIRE ND102181 TYPE 1 CLASS 1 22AWG WHT JACKET

MANNED SPACECRAFT CENTER HOUSTON, TEXAS — SIZE A — 1900961 — SCALE-NONE — REV LTR C — SHEET 4 OF 7

LIST OF MATERIALS

PENNANT NOTE	ITEM	QTY	PART NO	DESCRIPTION
16	36	2	1010490-194	INSULATION SLEEVING, ELECTRICAL
18	47	8	1015864-167	INSULATION SLEEVING, ELECTRICAL
10	16	19	1015864-165	INSULATION SLEEVING, ELECTRICAL

MANNED SPACECRAFT CENTER HOUSTON, TEXAS | SIZE A | 1900961
SCALE-NONE | REV LTR C | SHEET 5 OF 7

CONDUCTOR INDIVIDUAL LENGTH NUMBER	ITEM NO	2>	FROM CUT WIRE OR SHIELD STRIP WIRE OR JACKET CIRCUIT POINT 3>	T I B	TERMINATION SPEC 1>	ITEM NO.	NO.	TO CUT WIRE OR SHIELD STRIP WIRE OR JACKET CIRCUIT POINT 3>	T I B	TERMINATION SPEC 1>	ITEM NO.	NO.
A 1	1		P1-K	31Y		17		P2-K	31Y		17	
A 2	2		P1-A	31Y		18		P2-A	31Y		18	
A 3	2		P1-B	31Y		18		P2-B	31Y		18	
A 4	2		P1-E	31Y		18		P2-E	31Y		18	
A 5	1		P1-L	31Y		17		P2-L	31Y		17	
A 6	2		P1-C	31Y		18		P2-C	31Y		18	
A 7	2		P1-D	31Y		18		P2-D	31Y		18	
A 8	2		P1-F	31Y		18		P2-F	31Y		18	
A 9	2		P1-G	31Y		18		P2-G	31Y		18	
A 10	2		P1-H	31Y		18		P2-H	31Y		18	
A 11	2		P1-J	31Y				P2-J	31Y		18	
A 12			DELETED									
A 13			DELETED									
A 14	12			930	500	13 14 A 16			930	500	A 16	
A 14A	15		SHLD A14	25				P1-P	31Y		18	
A 14L			P1-N	31Y		17		P2-N	31Y		17	
A 14R			P1-M	31Y		17		P2-M	31Y		17	

1> THE STD CONDUCTOR TERMINATION FIGURES ARE PER
2> DIMENSIONS ARE IN INCHES AND TWO PLACE DECIMALS.

MANNED SPACECRAFT CENTER HOUSTON, TEXAS | SIZE A | 1900961
SCALE-NONE | REV LTR C | SHEET 6 OF 7

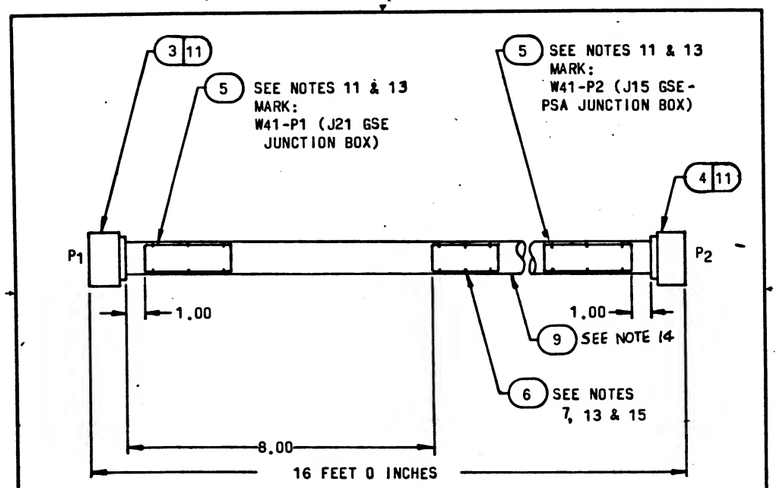

LOCATION TOLERANCE
(EXCEPT LENGTH)
+.50
-.50

MANNED SPACECRAFT CENTER HOUSTON, TEXAS | SIZE A | 1900961
SCALE-NONE | REV LTR B | SHEET 7 of 7

PENNANT NOTE	GENERAL NOTES
1	SEE CONDUCTOR CHART, PENNANT NOTE 1.
2	SEE CONDUCTOR CHART, PENNANT NOTE 2.
3	INTERPRET DRAWING IN ACCORDANCE WITH STANDARDS PRESCRIBED BY MIL-D-70327.
4	MARK CONDUCTOR IDENTIFICATION ON SINGLE CONDUCTORS PER ND1002019 OMITTING ALL SUFFIX LETTERS EXCEPT A AND B.
5	SPACING OF CONDUCTOR IDENTIFICATION SHALL BE EVERY 15 INCHES MAX. AND AT EACH TERMINATION.
6	SPIRALLING OF THE MARKING IS ALLOWED.
7	IDENTIFY USING DRAWING NO. AND REVISION LETTER PER MIL-STD-130 (ES-267). .12 INCH HIGH CHARACTERS WHITE.
8	Y OR N IN TINNED COLUMN INDICATES YES OR NO.
9	A LETTER WITH AN ASTERISK SUFFIX INDICATES A LOWER CASE LETTER.
10	VENDOR ITEM - SEE SPECIFICATION CONTROL DRAWING.
11	MARK IDENTIFICATION BAND WITH REFERENCE DESIGNATION AS NOTED .12 INCH HIGH COLOR WHITE, HOT IMPRESSION STAMPING PER ND1002019. CENTRALIZE.
12	SOLDER PER MIL-STD-440 USING ITEMS 7 AND 8.
13	SECURE TO CABLE USING ITEM 10. MARKING TO READ AWAY FROM CONNECTOR.
14	SEAL ZIPPER TUBING PER ND1002153.
15	SERIALIZE PER ND1002023.

MANNED SPACECRAFT CENTER HOUSTON, TEXAS	SIZE A	1900961
SCALE - NONE	REV LTR D	SHEET 2 OF 8

PENNANT NOTE	GENERAL NOTES
16	MARK SLEEVING WITH REFERENCE DESIGNATIONS AS SHOWN .12 INCH HIGH, COLOR BLACK PER ND1002019.
17	MARK SLEEVING OF MULTI-CONDUCTORS WITH THE CONDUCTOR NUMBER .12 INCH HIGH, COLOR BLACK, PER ND1002019 WHEN SLEEVING ITEM NUMBERS FOLLOW AN A OR T IN THE ACCESSORIES ITEM NUMBER FIELD.
18	A OR T PREFIX IN THE ACCESSORIES ITEM NUMBER COLUMN INDICATES THE READING POSITION AWAY FROM TERMINATION OR TOWARD TERMINATION RESPECTIVELY, OF THE WIRE MARKER SLEEVE.
19	THE SUFFIX LETTER OF A CONDUCTOR IDENTIFICATION NUMBER INDICATES CONDUCTOR SHIELDING, COLOR, OR MARKING. A - FROM END SHIELD R - WHITE WITH RED TRACER L - WHITE WITH BLUE TRACER

TOLERANCE CHART. UNLESS OTHERWISE SPECIFIED ——

APPLICABLE LENGTH FOR WIRE OR CABLE, STRIP WIRE, STRIP JACKET, CUT WIRE OR CUT SHIELD.	TOLERANCE: WIRE OR CABLE	STRIP WIRE	STRIP JACKET	CUT WIRE	CUT SHIELD
UNDER 1 INCH	+ .06-.00	+.03-.00	+.06-.06	+.06-.06	+.06-.06
1 INCH TO 6 INCHES	+ .50-.00	+.06-.00	+.25-.25	+.25-.25	+.25-.25
6 INCHES TO 6 FEET	+1.00-.00		+.50-.50	+.50-.50	+.50-.50
OVER 6 FEET	+2.00-.00				

MANNED SPACECRAFT CENTER HOUSTON, TEXAS	SIZE A	1900961
SCALE - NONE	REV LTR D	SHEET 3 OF 8

LIST OF MATERIALS

PENNANT NOTE	ITEM	QTY	PART NO	DESCRIPTION
	1	1	1900961-001	WIRE, ND1002181 TYPE 1, CLASS 1, 16AWG, WHT, 32 FT. TOTAL LENGTH
	2	1	1900961-002	WIRE, ND1002181 TYPE 1, CLASS 1, 12AWG, WHT, 144 FT. TOTAL LENGTH
	3	1	MS3106R28-20P	(1897104-200) CONNECTOR-PLUG
	4	1	MS3106R28-20S	(1897105-200) CONNECTOR-PLUG
10	5	2	1016128-041	BAND-IDENTIFICATION
10	6	1	1016128-011	BAND-IDENTIFICATION
	7	AR	QQ-S-571	SOLDER SN60 (ES-2105 ALLOY 1)
	8	AR	QQ-S-571	FLUX TYPE AR (ES-2175 TYPE 1 OR 2) OR MIL-F-14256 FLUX (ES-2798)
	9	1	1900961-003	ZIPPER TUBING ND1002155 TYPE 1, PLASTIC, FLEXIBLE .75 DIA. 16 FT. TOTAL LENGTH
	10	AR	MIL-T-713	LACING TAPE TYPE P, CLASS 2, BLACK (ES-2732 NO. 18)
10	11	2	1016237-280	CLAMP-STRAIN RELIEF
	12	1	1900961-004	WIRE ND1002181 TYPE 2 CLASS 4 16AWG WHT JACKET WHT/BLU, WHT/RED 16 FT TOTAL LENGTH
10	13	1	1000243-023	FERRULE ELECT. CONDUCTOR
10	14	1	1000242-018	FERRULE ELECT. CONDUCTOR
	15	1	1900961-005	WIRE ND1002181 TYPE 1 CLASS 1 22AWG WHT JACKET

MANNED SPACECRAFT CENTER HOUSTON, TEXAS	SIZE A	1900961
SCALE - NONE	REV LTR D	SHEET 4 OF 8

REVISIONS

SYM	DESCRIPTION	DATE	APPROVAL
A	CHANGE IN ACCORDANCE WITH CM193447	5 FEB 64	GG EF
B	CHANGE IN ACCORDANCE WITH CM193448 NOTE 5 08656	5 FEB 64	GG EF
C	CHANGE IN ACCORDANCE WITH CN 200711 TDR2 08659	18 MAR 64	Thomas
D	CHANGE IN ACCORDANCE WITH CN 196980 REVISED CUSTOMER DATA (Y2-64) REVISED PER TDRR 10753	26 MAY 64	JJJ

APPLICATION

NEXT ASSY	USED ON
1901308	1900005-011

FOR INFORMATION ONLY

CLASS B RELEASE TDR No. 0481 DATE 6 Jun 63

REV D D D D D D D
SHEET 1 2 3 4 5 6 7 8
REV STATUS
OF SHEETS SHEET 1 2

AC SPARK PLUG DIVISION, GMC
MILWAUKEE, WISCONSIN

ACSP PN

DRAWN — DATE 29 Oct 63
CHECKED — DATE 5 Jun 63
APPROVAL — DATE 5 Jun 63
APPROVAL — DATE 11-21-63

NASA APPROVAL — DATE 11-22-63
MIT APPROVAL — DATE 11-26-63
CONTRACT NAS 9-497

MANNED SPACECRAFT CENTER HOUSTON, TEXAS

CABLE INTERCONNECT W41 TESTING

CODE IDENT NO. — SIZE A — 1900961 — REV D

SCALE None — SHEET 1 OF 8

PENNANT LIST OF MATERIALS

NOTE	ITEM	QTY	PART NO	DESCRIPTION
10	16	2	1010490-194	INSULATION SLEEVING, ELECTRICAL
	17			DELETED (1015864-167)
	18			DELETED (1015864-165)
10	19	1	1010490-258	INSULATION SLEEVING, ELECTRICAL
10	20	1	1016006-002	SPLICE REDUCER

CONDUCTOR INDIVIDUAL LENGTH NUMBER	ITEM NO.	2		FROM CUT WIRE OR SHIELD STRIP WIRE OR JACKET CIRCUIT POINT	2	T I N	2	TERMINATION SPEC. 1 ITEM NO.	NO.	TO CUT WIRE OR SHIELD STRIP WIRE OR JACKET CIRCUIT POINT	2	T I N	2	TERMINATION SPEC 1 ITEM NO.	NO.
A 1	1			P1-K	31	Y				P2-K	31	Y			
A 2	2			P1-A	31	Y				P2-A	31	Y			
A 3	2			P1-B	31	Y				P2-B	31	Y			
A 4	2			P1-E	31	Y				P2-E	31	Y			
A 5	1			P1-L	31	Y				P2-L	31	Y			
A 6	2			P1-C	31	Y				P2-C	31	Y			
A 7	2			P1-D	31	Y				P2-D	31	Y			
A 8	2			P1-F	31	Y				P2-F	31	Y			
A 9	2			P1-G	31	Y				P2-G	31	Y			
A 10	2			P1-H	31	Y				P2-H	31	Y			
A 11	2			P1-P	31	Y				P2-P	31	Y			
A 12				DELETED											
A 13				DELETED											
A 14	12				530		500	13 14	5		530		500	A 16	
								A 16							
A 14A	15			SHLD A14	25	N				E1	25	N			
A 14L				E1	25	N				P2-N	31	Y			
A 14R				P1-M	31	Y				P2-M	31	Y			

1 THE STD CONDUCTOR TERMINATION FIGURES ARE PER
2 DIMENSIONS ARE IN INCHES AND TWO PLACE DECIMALS.

CONDUCTOR INDIVIDUAL LENGTH NUMBER	ITEM NO.	2		FROM CUT WIRE OR SHIELD STRIP WIRE OR JACKET CIRCUIT POINT	2	T I N	2	TERMINATION SPEC. 1 ITEM NO.	NO.	TO CUT WIRE OR SHIELD STRIP WIRE OR JACKET CIRCUIT POINT	2	T I N	2	TERMINATION SPEC 1 ITEM NO.	NO.
A 15	1			E1	25	N				P1-N	31	Y			

1 THE STD CONDUCTOR TERMINATION FIGURES ARE PER
2 DIMENSIONS ARE IN INCHES AND TWO PLACE DECIMALS.

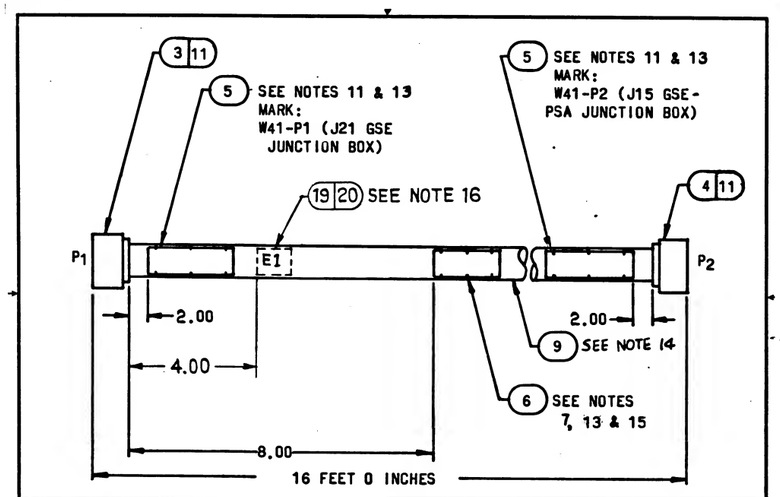

LOCATION TOLERANCE (EXCEPT LENGTH)
+.50
-.50

APPLICATION		REVISIONS			
NEXT ASSY	USED ON	SYM	DESCRIPTION	DATE	APPROVAL
1901308	1900005-011	E	REVISE & UPGRADED TO CLASS A PER TDRR 17826	30-MAR 65	M.G. / GL

REV																							
SHEET																							
REV STATUS OF SHEETS	REV	E	E	E	E	E	E	E	E														
	SHEET	1	2	3	4	5	6	7	8														

AC SPARK PLUG DIVISION, GMC MILWAUKEE, WISCONSIN	MANNED SPACECRAFT CENTER HOUSTON, TEXAS
ACSP PN	
DRAWN [signature] DATE 29 OCT 63 CHECKED [signature] 5 NOV 63 APPROVAL [signature] 5 NOV 63 APPROVAL [signature] 11/22/63	CABLE INTERCONNECT W41 TESTING
NASA APPROVAL [signature] 11-26-63 MIT APPROVAL [signature]	CODE IDENT NO. / SIZE A / 1900961 / REV E
CONTRACT NAS 9-497	SCALE NONE / SHEET 1 OF 8

PENNANT NOTE — GENERAL NOTES

1 SEE CONDUCTOR CHART. PENNANT NOTE 1.

2 SEE CONDUCTOR CHART. PENNANT NOTE 2.

3 INTERPRET DRAWING IN ACCORDANCE WITH STANDARDS PRESCRIBED BY MIL-D-70327.

4 MARK CONDUCTOR IDENTIFICATION ON SINGLE CONDUCTORS PER ND1002019 OMITTING ALL SUFFIX LETTERS EXCEPT A AND B.

5 SPACING OF CONDUCTOR IDENTIFICATION SHALL BE EVERY 15 INCHES MAX. AND AT EACH TERMINATION.

6 SPIRALLING OF THE MARKING IS ALLOWED.

7 IDENTIFY USING DRAWING NO. AND REVISION LETTER PER MIL-STD-130 (ES-267). .12 INCH HIGH CHARACTERS WHITE.

8 Y OR N IN TINNED COLUMN INDICATES YES OR NO.

9 A LETTER WITH AN ASTERISK SUFFIX INDICATES A LOWER CASE LETTER.

10 VENDOR ITEM - SEE SPECIFICATION CONTROL DRAWING.

11 MARK IDENTIFICATION BAND WITH REFERENCE DESIGNATION AS NOTED .12 INCH HIGH COLOR WHITE. HOT IMPRESSION STAMPING PER ND1002019. CENTRALIZE.

12 SOLDER PER MIL-STD-440 USING ITEMS 7 AND 8.

13 SECURE TO CABLE USING ITEM 10. MARKING TO READ AWAY FROM CONNECTOR.

14 SEAL ZIPPER TUBING PER ND1002153.

15 SERIALIZE PER ND1002023.

PENNANT NOTE — GENERAL NOTES

16 MARK SLEEVING WITH REFERENCE DESIGNATIONS AS SHOWN .12 INCH HIGH. COLOR BLACK PER ND1002019.

17 MARK SLEEVING OF MULTI-CONDUCTORS WITH THE CONDUCTOR NUMBER .12 INCH HIGH. COLOR BLACK. PER ND1002019 WHEN SLEEVING ITEM NUMBERS FOLLOW AN A OR T IN THE ACCESSORIES ITEM NUMBER FIELD.

18 A OR T PREFIX IN THE ACCESSORIES ITEM NUMBER COLUMN INDICATES THE READING POSITION AWAY FROM TERMINATION OR TOWARD TERMINATION RESPECTIVELY. OF THE WIRE MARKER SLEEVE.

19 THE SUFFIX LETTER OF A CONDUCTOR IDENTIFICATION NUMBER INDICATES CONDUCTOR SHIELDING. COLOR. OR MARKING.
A - FROM END SHIELD
R - WHITE WITH RED TRACER
L - WHITE WITH BLUE TRACER

TOLERANCE CHART. UNLESS OTHERWISE SPECIFIED ——

APPLICABLE LENGTH FOR WIRE OR CABLE. STRIP WIRE. STRIP JACKET. CUT WIRE OR CUT SHIELD.	TOLERANCE				
	WIRE OR CABLE	STRIP WIRE	STRIP JACKET	CUT WIRE	CUT SHIELD
UNDER 1 INCH	+ .06-.00	+.03-.00	+.06-.06	+.06-.06	+.06-.06
1 INCH TO 6 INCHES	+ .50-.00	+.06-.00	+.25-.25	+.25-.25	+.25-.25
6 INCHES TO 6 FEET	+1.00-.00		+.50-.50	+.50-.50	+.50-.50
OVER 6 FEET	+2.00-.00				

PENNANT NOTE — LIST OF MATERIALS

NOTE	ITEM	QTY	PART NO	DESCRIPTION
	1	1	1900961-001	WIRE. ND1002181 TYPE 1. CLASS 1. 16AWG. WHT. 32 FT. TOTAL LENGTH
	2	1	1900961-002	WIRE. ND1002181 TYPE 1. CLASS 1. 12AWG. WHT. 144 FT. TOTAL LENGTH
	3	1	MS3106R28-20P	(1897104-200) CONNECTOR-PLUG
	4	1	MS3106R28-20S	(1897105-200) CONNECTOR-PLUG
10	5	2	1016128-041	BAND-IDENTIFICATION
10	6	1	1016128-011	BAND-IDENTIFICATION
	7	AR	QQ-S-571	SOLDER SN60 (ES-2105 ALLOY 1)
	8	AR	QQ-S-571	FLUX TYPE AR (ES-2175 TYPE 1 OR 2) OR MIL-F-14256 FLUX (ES-2798)
	9	1	1900961-003	ZIPPER TUBING ND1002155 TYPE 1. PLASTIC. FLEXIBLE .75 DIA. 16 FT. TOTAL LENGTH
	10	AR	MIL-T-713	LACING TAPE TYPE P. CLASS 2. BLACK (ES-2732 NO. 18)
10	11	2	1016237-280	CLAMP-STRAIN RELIEF
	12	1	1900961-004	WIRE ND1002181 TYPE 2 CLASS 4 16AWG WHT JACKET WHT/BLU. WHT/RED 16 FT TOTAL LENGTH
10	13	1	1000243-023	FERRULE ELECT. CONDUCTOR
10	14	1	1000242-018	FERRULE ELECT. CONDUCTOR
	15	1	1900961-005	WIRE ND1002181 TYPE 1 CLASS 1 22AWG WHT ~~JACKET~~

PENNANT NOTE — LIST OF MATERIALS

NOTE	ITEM	QTY	PART NO	DESCRIPTION
10	16	2	1010490-194	INSULATION SLEEVING. ELECTRICAL
	17			DELETED (1015864-167)
	18			DELETED (1015864-165)
10	19	1	1010490-258	INSULATION SLEEVING. ELECTRICAL
10	20	1	1016006-002	SPLICE REDUCER

GHH CABLE W-41 E 1900961

CONDUCTOR INDIVIDUAL LENGTH NUMBER	ITEM NO.	2		FROM CUT WIRE OR SHIELD STRIP WIRE OR JACKET CIRCUIT POINT 2	TIN 2	TERMINATION SPEC. 1 ITEM NO.	NO.	TO CUT WIRE OR SHIELD STRIP WIRE OR JACKET CIRCUIT POINT 2	TIN 2	TERMINATION SPEC. 1 ITEM NO.	NO.
A 1	1			P1-K	31Y			P2-K	31Y		
A 2	2			P1-A	31Y			P2-A	31Y		
A 3	2			P1-B	31Y			P2-B	31Y		
A 4	2			P1-E	31Y			P2-E	31Y		
A 5	1			P1-L	31Y			P2-L	31Y		
A 6	2			P1-C	31Y			P2-C	31Y		
A 7	2			P1-D	31Y			P2-D	31Y		
A 8	2			P1-F	31Y			P2-F	31Y		
A 9	2			P1-G	31Y			P2-G	31Y		
A 10	2			P1-H	31Y			P2-H	31Y		
A 11	2			P1-P	31Y			P2-P	31Y		
A 12				DELETED							
A 13				DELETED							
A 14	12				530	500 13 14	5		530	500 A 16	
						A 16					
A 14A	15			SHLD A14	25N			E1	25N		
A 14L				E1	25N			P2-N	31Y		
A 14R				P1-M	31Y			P2-M	31Y		

1 THE STD CONDUCTOR TERMINATION FIGURES ARE PER
2 DIMENSIONS ARE IN INCHES AND TWO PLACE DECIMALS.

MANNED SPACECRAFT CENTER HOUSTON, TEXAS | SIZE A | 1900961
SCALE - NONE | REV LTR E | SHEET 6 OF 8

MIL 2049 - 4-63 WIR

GHH CABLE W-41 E 1900961

CONDUCTOR INDIVIDUAL LENGTH NUMBER	ITEM NO.	2		FROM CUT WIRE OR SHIELD STRIP WIRE OR JACKET CIRCUIT POINT 2	TIN 2	TERMINATION SPEC. 1 ITEM NO.	NO.	TO CUT WIRE OR SHIELD STRIP WIRE OR JACKET CIRCUIT POINT 2	TIN 2	TERMINATION SPEC 1 ITEM NO.	NO.
A 15	1			E1	25N			P1-N	31Y		

1 THE STD CONDUCTOR TERMINATION FIGURES ARE PER
2 DIMENSIONS ARE IN INCHES AND TWO PLACE DECIMALS.

MANNED SPACECRAFT CENTER HOUSTON, TEXAS | SIZE A | 1900961
SCALE - NONE | REV LTR E | SHEET 7 OF 8

MIL 2049 - 4-63 WIR

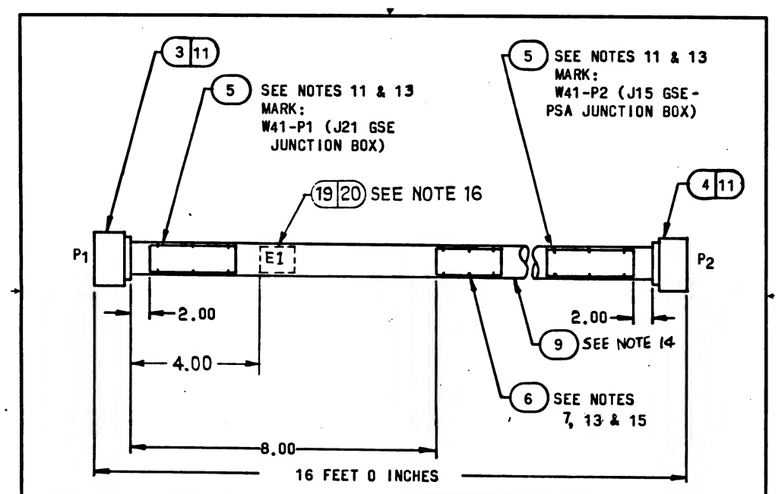

LOCATION TOLERANCE
(EXCEPT LENGTH)
+.50
-.50

MANNED SPACECRAFT CENTER HOUSTON, TEXAS | SIZE A | 1900961
SCALE - NONE | REV LTR E | SHEET 8 of 8

MIL 2049 4-63

APPLICATION		REVISIONS			
NEXT ASSY	USED ON	SYM	DESCRIPTION	DATE	APPROVAL
1901308	1900005-011	E	REVISE & UPGRADED TO CLASS A PER TDER 17826	30-MAR-65	M.G.
		F	REPLACED WITH CHANGE BY REV G PER TDRR 21048	29JUL 65	JWP

(F) REPLACED WITH CHANGE BY REV G

REV SHEET								
REV STATUS	REV	F	F	F	F	F	F	F
OF SHEETS	SHEET	1	2	3	4	5	6	7	8

AC SPARK PLUG DIVISION, GMC
MILWAUKEE, WISCONSIN

ACSP PN

DRAWN 30 OCT 63
CHECKED 5 AUG 63
APPROVAL 5 NOV 63
APPROVAL 12/6/63
NASA APPROVAL
MIT APPROVAL
CONTRACT NAS 9-497

MANNED
SPACECRAFT CENTER
HOUSTON, TEXAS

CABLE INTERCONNECT M41
TESTING

CODE IDENT NO. | SIZE A | 1900961 | REV F

SCALE None | SHEET 1 OF 8

GENERAL NOTES

NOTES

1 SEE CONDUCTOR CHART
2 SEE CONDUCTOR CHART
3 INTERPRET DRAWING IN ACCORDANCE WITH STANDARDS PRESCRIBED BY MIL-D-70327.
4 MARK CONDUCTOR IDENTIFICATION ON SINGLE CONDUCTORS PER ND1002019 OMITTING ALL SUFFIX LETTERS EXCEPT A AND B.
5 SPACING OF CONDUCTOR IDENTIFICATION SHALL BE EVERY 15 INCHES MAX AND AT EACH TERMINATION.
6 SPIRALLING OF THE MARKING IS ALLOWED.
7 IDENTIFY USING DRAWING NO. AND REVISION LETTER PER MIL-STD-130 (ES-267). .12 INCH HIGH CHARACTERS BLACK.
8 Y OR N IN TINNED COLUMN INDICATES YES OR NO.
9 A LETTER WITH AN ASTERISK SUFFIX, INDICATES A LOWER CASE LETTER.
10 VENDOR ITEM - SEE SPECIFICATION CONTROL DRAWING.
11 MARK IDENTIFICATION BAND WITH REFERENCE DESIGNATION AS NOTED .12 INCH HIGH COLOR BLACK, HOT IMPRESSION STAMPING PER ND1002019. CENTRALIZE.

MANNED SPACECRAFT CENTER HOUSTON, TEXAS	SIZE A	1900961	
SCALE - NONE	REV LTR +		SHEET 2 of 6

MIL 2084 4-63

GENERAL NOTES

NOTES

12 SOLDER PER MIL-STD-440 USING ITEMS 7 AND 8.
13 SECURE TO CABLE USING ITEM 10. MARKING TO READ AWAY FROM CONNECTOR.
14 SEAL ZIPPER TUBING PER ND 1002153.
15 SERIALIZE PER ND 1002023.

TOLERANCE CHART, UNLESS OTHERWISE SPECIFIED ---

APPLICABLE LENGTH FOR WIRE OR CABLE, STRIP WIRE, STRIP JACKET, CUT WIRE OR CUT SHIELD	TOLERANCE				
	WIRE OR CABLE	STRIP WIRE	STRIP JACKET	CUT WIRE	CUT SHIELD
UNDER 1 INCH	+ .06-.00	+.03-.00	+.06-.06	+.06-.06	+.06-.06
1 INCH TO 6 INCHES	+ .50-.00	+.06-.00	+.25-.25	+.25-.25	+.25-.25
6 INCHES TO 6 FEET	+1.00-.00		+.50-.50	+.50-.50	+.50-.50
OVER 6 FEET	+2.00-.00				

MANNED SPACECRAFT CENTER HOUSTON, TEXAS	SIZE A	1900961	
SCALE - NONE	REV LTR +		SHEET 3 of 6

MIL 2084 4-63

LIST OF MATERIAL

SEE NOTE	ITEM	REQ'D	PART NUMBER	DESCRIPTION
	1	1	1900961-001	WIRE, ND 1002181 TYPE 1, CLASS 1, 16 AWG, WHT, 64 FT TOTAL LENGTH
	2	1	1900961-002	WIRE, ND 1002181 TYPE 1, CLASS 1, 12 AWG, WHT, 144 FT TOTAL LENGTH
	3	1	MS3106R28-20P	(1897104-200) CONNECTOR-PLUG
	4	1	MS3106R28-20S	(1897105-200) CONNECTOR-PLUG
10	5	2	1016128-041	BAND-IDENTIFICATION
10	6	1	1016128-011	BAND-IDENTIFICATION
	7	AR	QQ-S-571	SOLDER SN60 (ES-2105 ALLOY 1)
	8	AR	MIL-F-14256	FLUX (ES-2798) OR
			QQ-S-571	FLUX TYPE AR (ES-2175 TYPE 1 OR 2)
	9	1	1900961-003	ZIPPER TUBING ND 1002155 TYPE 1, PLASTIC FLEXIBLE .62 DIA 16 FT TOTAL LENGTH
	10	AR	MIL-T-713	LACING TAPE TYPE P, CLASS 2, BLACK (ES-2732 NO. 18)
10	11	2	1016237-280	CLAMP-STRAIN RELIEF

MANNED SPACECRAFT CENTER HOUSTON, TEXAS	SIZE A	1900961	
SCALE - NONE	REV LTR +		SHEET 4 of 6

MIL 2084 4-63

REVISIONS

APPLICATION NEXT ASSY	USED ON	SYM	DESCRIPTION	DATE	APPROVAL
1900005-011	1900005-011				

FOR INFORMATION ONLY
CLASS B RELEASE TDR No. 0581 DATE 6 Jan 63

REV	SHEET	REV STATUS	REV	+	+	+	+	+
		OF SHEETS	SHEET	1	2	3	4	5	6	7

AC SPARK PLUG DIVISION, GMC
MILWAUKEE, WISCONSIN

ACSP PN

DRAWN DATE 29 Oct 62
CHECKED DATE 5 Nov 62
APPROVAL D. Abraham 5 Nov 62
APPROVAL L. Goldman 14 Nov 62
NASA APPROVAL
MIT APPROVAL
CONTRACT NAS 9-497

MANNED SPACECRAFT CENTER HOUSTON, TEXAS

CABLE INTERCONNECT W41 TESTING

CODE IDENT NO. 1900961 | SIZE A | REV | SHEET 1 OF 6 | SCALE NONE

INCHES 0 1 2
PHOTOGRAPHIC SCALE ONLY

GHH CABLE W41 + 1900961

CONDUCTOR INDIVIDUAL LENGTH NUMBER	ITEM NO.	2	FROM CUT WIRE OR SHIELD STRIP WIRE OR JACKET CIRCUIT POINT	2	TIN	2	TERMINATION SPEC. 1 ITEM NO.	NO.	TO CUT WIRE OR SHIELD STRIP WIRE OR JACKET CIRCUIT POINT	2	TIN	2	TERMINATION SPEC 1 ITEM NO.	NO.
A 1	1		P1-K	22	Y				P2-K	22	Y			
A 2	2		P1-A	22	Y				P2-A	22	Y			
A 3	2		P1-B	22	Y				P2-B	22	Y			
A 4	2		P1-E	22	Y				P2-E	22	Y			
A 5	1		P1-L	22	Y				P2-L	22	Y			
A 6	2		P1-C	22	Y				P2-C	22	Y			
A 7	2		P1-D	22	Y				P2-D	22	Y			
A 8	2		P1-F	22	Y				P2-F	22	Y			
A 9	2		P1-G	22	Y				P2-G	22	Y			
A 10	2		P1-H	22	Y				P2-H	22	Y			
A 11	2		P1-J	22	Y				P2-J	22	Y			
A 12	1		P1-N	22	Y				P2-N	22	Y			
A 13	1		P1-M	22	Y				P2-M	22	Y			

1 THE STD CONDUCTOR TERMINATION FIGURES ARE PER
2 DIMENSIONS ARE IN INCHES AND TWO PLACE DECIMALS.

MANNED SPACECRAFT CENTER HOUSTON, TEXAS	SIZE A	1900961
SCALE-NONE	REV LTR +	SHEET 5 OF 6

MIL 2088 - 4-63 WIR

PHOTOGRAPHIC SCALE ONLY 0 1 2 INCHES

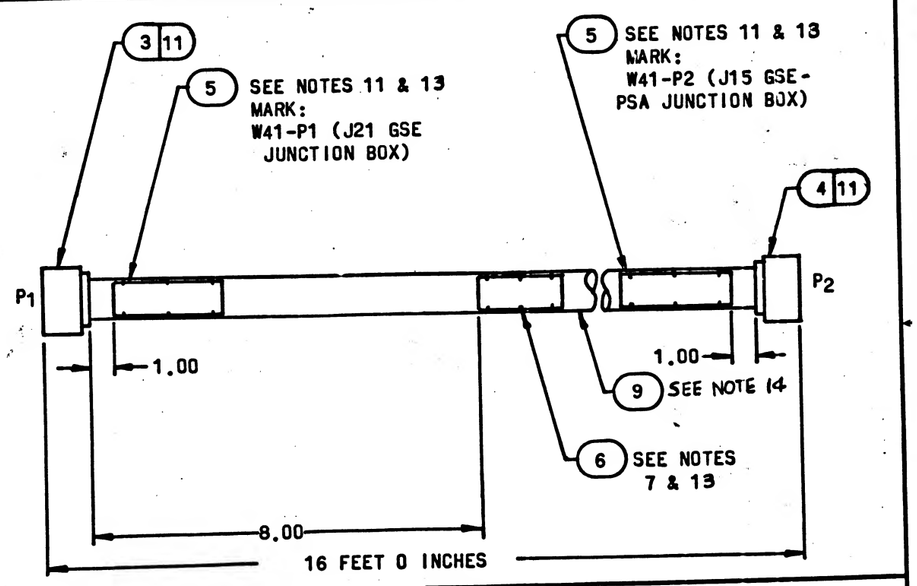

MANNED SPACECRAFT CENTER HOUSTON, TEXAS	SIZE A	1900961
SCALE-NONE	REV LTR +	SHEET 6 of 6

MIL 2088 4-63

REVISIONS					
SYM	ZONE	DESCRIPTION	CHG NO.	DATE	APPD.

NOTES:

1. INTERPRET DRAWING IN ACCORDANCE WITH STANDARDS PRESCRIBED BY MIL-D-70327.
2. IDENTIFY USING DRAWING NUMBER AND REVISION LETTER PER MIL-STD-130 (ES-267).
3. LAP INTERFACE OF ITEMS (1) AND (2) TO OBTAIN AREA CONTACT OF NOT LESS THAN 75%.
4. GRIND OR LAP SURFACE "B" TO OBTAIN DIMENSION INDICATED.
5. DRY FILM LUBRICATE PER MIL-L-25504.

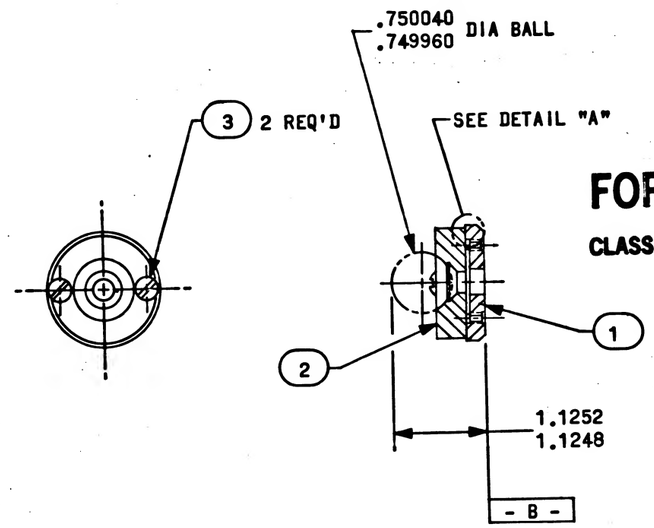

FOR INFORMATION ONLY

CLASS B RELEASE TDR No. 06595 DATE 25 Feb 69

DETAIL "A"
SCALE 4:1

QUANTITY REQUIRED				EFFECTIVITY	ITEM NO.	PART OR IDENTIFYING NUMBER	NOMENCLATURE OR DESCRIPTION
			2		3	1900965	SCREW, SHOULDER
			1		2	1900964	INSERT, BALL MOUNT, PLANE
			1		1	1900971	INSERT, BALL MOUNT, PLANE BASE
			011				

LIST OF PARTS AND MATERIALS

NEXT ASSY	USED ON
1900014-011	1900014-011
1900013-011	1900013-011

APPLICATION

UNLESS OTHERWISE SPECIFIED
DIMENSIONS ARE IN INCHES
TOLERANCES ON

FRACTIONS	DECIMALS	ANGLES
+ —	+ —	+ —
- —	- —	- —

DO NOT SCALE THIS DRAWING

MATERIAL

CONTRACT NAS 9-497

AC SPARK PLUG DIVISION, GMC
MILWAUKEE, WISCONSIN

ACSP PN

DRAWN 24-OCT-63 DATE
CHECKED 24 OCT 63
APPROVAL 24 Oct 63
APPROVAL 2/20/64
NASA APPROVAL 2-3-64
MIT APPROVAL 2/21/64

MANNED
SPACECRAFT CENTER
HOUSTON, TEXAS

INSERT, BALL MOUNT, PLANE, ASSY OF

CODE IDENT NO. | SIZE C | 1900969

SCALE 1/1 | SHEET 1 OF 1

1900969

MASTER

MIL 1077C-P

INCHES
0 1 2
PHOTOGRAPHIC SCALE ONLY

REVISIONS					
SYM	ZONE	DESCRIPTION	CHG NO.	DATE	APPD.

NOTES:

1. INTERPRET DRAWING IN ACCORDANCE WITH STANDARDS PRESCRIBED BY MIL-D-70327.
2. IDENTIFY USING DRAWING NUMBER AND REVISION LETTER PER MIL-STD-130 (ES-267).
3. LAP INTERFACE OF ITEMS (1) AND (2) TO OBTAIN AREA CONTACT OF NOT LESS THAN 75%.
4. GRIND OR LAP SURFACE "B" TO OBTAIN DIMENSION INDICATED.
5. DRY FILM LUBRICATE PER MIL-L-25504.

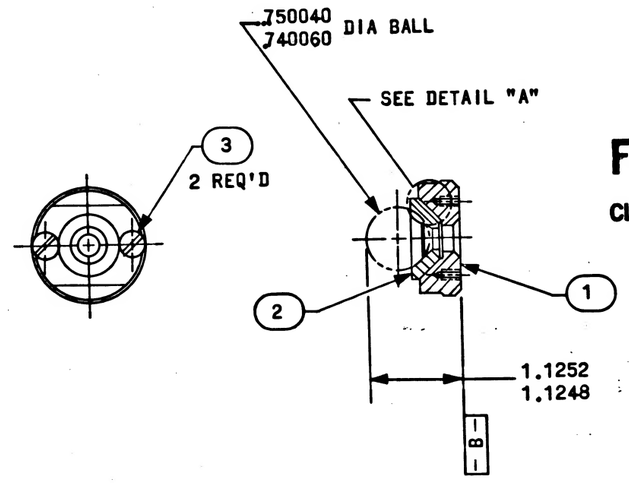

FOR INFORMATION ONLY

CLASS B RELEASE TDR No. 06595 DATE 25 Feb 64

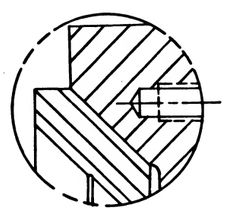

DETAIL "A"
SCALE 4:1

QUANTITY REQUIRED				EFFECTIVITY	ITEM NO.	PART OR IDENTIFYING NUMBER	NOMENCLATURE OR DESCRIPTION
			2		3	1900965	SCREW, SHOULDER
			1		2	1900966	INSERT, BALL MOUNT, LINE
			1		1	1900967	INSERT, BALL MOUNT, LINE BASE
			011				

LIST OF PARTS AND MATERIALS

NEXT ASSY	USED ON
1900014-011	1900014-011
1900013-011	1900013-011

APPLICATION

MASTER

UNLESS OTHERWISE SPECIFIED
DIMENSIONS ARE IN INCHES
TOLERANCES ON

FRACTIONS	DECIMALS	ANGLES
+ —	+ —	+ —
— —	— —	— —

DO NOT SCALE THIS DRAWING

MATERIAL

CONTRACT NAS 9-497

AC SPARK PLUG DIVISION, GMC
MILWAUKEE, WISCONSIN

ACSP PN

DRAWN 24-OCT-63
CHECKED 30 Oct 63
APPROVAL 30 Oct 63
APPROVAL 2/20/64
NASA APPROVAL 2-25-64
MIT APPROVAL 2/26/64

MANNED
SPACECRAFT CENTER
HOUSTON, TEXAS

INSERT, BALL MOUNT,
LINE, ASSY OF

CODE IDENT NO. | SIZE C | 1900970

SCALE 1/1 | SHEET 1 of 1

MIL 1077C—P

INCHES
0 1 2
PHOTOGRAPHIC SCALE ONLY

PENNANT NOTE — GENERAL NOTES

1. SEE CONDUCTOR CHART, PENNANT NOTE 1.
2. SEE CONDUCTOR CHART, PENNANT NOTE 2.
3. INTERPRET DRAWING IN ACCORDANCE WITH STANDARDS PRESCRIBED BY MIL-D-70327.
4. MARK CONDUCTOR IDENTIFICATION ON SINGLE CONDUCTORS PER ND1002019 OMITTING ALL SUFFIX LETTERS EXCEPT A AND B.
5. SPACING OF CONDUCTOR IDENTIFICATION SHALL BE EVERY 15 INCHES MAX. AND AT EACH TERMINATION.
6. SPIRALLING OF THE MARKING IS ALLOWED.
7. IDENTIFY USING DRAWING NO. AND REVISION LETTER PER MIL-STD-130 (ES-267). .12 INCH HIGH CHARACTERS WHITE.
8. Y OR N IN TINNED COLUMN INDICATES YES OR NO.
9. A LETTER WITH AN ASTERISK SUFFIX, INDICATES A LOWER CASE LETTER.
10. VENDOR ITEM - SEE SPECIFICATION CONTROL DRAWING.
11. MARK IDENTIFICATION BAND WITH REFERENCE DESIGNATION AS NOTED .12 INCH HIGH COLOR WHITE, HOT IMPRESSION STAMPING PER ND1002019. CENTRALIZE.
12. MARK SLEEVING WITH REFERENCE DESIGNATIONS AS SHOWN .12 INCH HIGH, COLOR BLACK PER ND1002019.
13. MARK SLEEVING OF MULTI-CONDUCTORS WITH THE CONDUCTOR NUMBER .12 INCH HIGH, COLOR BLACK, PER ND1002019 WHEN SLEEVING ITEM NUMBERS FOLLOW AN A OR T IN THE ACCESSORIES ITEM NUMBER FIELD.

MANNED SPACECRAFT CENTER HOUSTON, TEXAS	SIZE A	1900974	
SCALE-NONE	REV LTR C		SHEET 2 OF 14

MIL 2084 4-63

PENNANT NOTE — GENERAL NOTES

TOLERANCE CHART, UNLESS OTHERWISE SPECIFIED ——

APPLICABLE LENGTH FOR WIRE OR CABLE, STRIP WIRE, STRIP JACKET, CUT WIRE OR CUT SHIELD.	TOLERANCE: WIRE OR CABLE	STRIP: WIRE	STRIP: JACKET	CUT: WIRE	CUT: SHIELD
UNDER 1 INCH	+ .06-.00	+.03-.00	+.06-.06	+.06-.06	+.06-.06
1 INCH TO 6 INCHES	+ .50-.00	+.06-.00	+.25-.25	+.25-.25	+.25-.25
6 INCHES TO 6 FEET	+1.00-.00		+.50-.50	+.50-.50	+.50-.50
OVER 6 FEET	+2.00-.00				

MANNED SPACECRAFT CENTER HOUSTON, TEXAS	SIZE A	1900974	
SCALE-NONE	REV LTR C		SHEET 4 OF 14

MIL 2084 4-63

PENNANT NOTE — GENERAL NOTES

14. A OR T PREFIX IN THE ACCESSORIES ITEM NUMBER COLUMN INDICATES THE READING POSITION AWAY FROM TERMINATION OR TOWARD TERMINATION RESPECTIVELY, OF THE WIRE MARKER SLEEVE.
15. THE SUFFIX LETTER OF A CONDUCTOR IDENTIFICATION NUMBER INDICATES CONDUCTOR SHIELDING, COLOR, OR MARKING.
    A - FROM END SHIELD
    L - WHITE WITH BLUE TRACER OR LETTER L
    R - WHITE WITH RED TRACER OR LETTER R
16. ASSEMBLE CONTACTS IN ALL CONNECTOR GROMMET HOLES.
17. SECURE TO CABLE USING ITEM 14, MARKING TO READ AWAY FROM CONNECTOR.
18. SEAL ZIPPER TUBING PER ND1002153
19. SERIALIZE PER ND1002023
20. ITEM 16 FURNISHED WITH ITEM 1.
21. ITEM 17 SHALL BE SHORTENED WHEN NECESSARY TO AVOID INTERFERENCE WITH FERRULES AND MAY BE CUT LENGTHWISE ON ONE SIDE. SELECT ONE OR MORE OF ITEM 17 AS REQUIRED TO FIT.
22. THE FOLLOWING MULTICONDUCTORS ARE TO BE TWISTED TOGETHER WITH THE BEST COMMERCIAL PRACTICE. THEY SHALL BE TWISTED WITH A LAY NOT GREATER THAN 14 TIMES NOR LESS THAN 8 TIMES THE PITCH DIAMETER. AS TWISTED PAIRS, CONDUCTORS (A36 AND A39), (A42 AND A45), (A51 AND A54) AND (A48 AND A57)
23. SEE NOTES 10 AND 16

MANNED SPACECRAFT CENTER HOUSTON, TEXAS	SIZE A	1900974	
SCALE-NONE	REV LTR C		SHEET 3 OF 14

MIL 2084 4-63

V2-64

FOR INFORMATION ONLY

CLASS B RELEASE TDR No. 05663 DATE 1/16/64

APPLICATION	
NEXT ASSY	USED ON
1901308	1900005-011

REVISIONS

SYM	DESCRIPTION	DATE	APPROVAL
A	CHANGE IN ACCORDANCE WITH CM 193385 TDR R 09702	6 FEB 64	J J J
B	CHANGE IN ACCORDANCE WITH CM 193507 TDR R 09708	12 MAR 64	RJF
C	CHANGE IN ACCORDANCE WITH CM 195589 0 TDR R 09708	2 APR 64	
D	CHANGE IN ACCORDANCE WITH CM 196009 09708	21 APR 64	
E	CHANGE IN ACCORDANCE WITH CM 196920 REVISED PER TDR R 09709	21 MAY 64	J J J

REV	E	C	C	E	C	C	C	D	C	D	C
SHEET	1	2	3	4	5	6	7	8	9	10	11	12	13	14

REV STATUS OF SHEETS

AC SPARK PLUG DIVISION, GMC MILWAUKEE, WISCONSIN

ACSP PN

MANNED SPACECRAFT CENTER HOUSTON, TEXAS

CABLE INTERCONNECT W18

1SS, OSS & G & N TESTING

DRAWN DATE 1-16-64

CHECKED DATE 2-26-63

APPROVAL 3-6-63

APPROVAL L. Gutman 1/13/64

NASA APPROVAL

MIT APPROVAL

CONTRACT NAS 9-497

CODE IDENT NO. 1900974

SIZE A

REV E

SCALE NONE

SHEET 1 OF 14

LIST OF MATERIALS

PENNANT NOTE	ITEM	QTY	PART NO	DESCRIPTION
16	1	1	MS3126F-20-41SW (1897044-411)	CONNECTOR PLUG
23	2	1	1010621- 2	CONNECTOR PLUG
	3	1	1900974-001	WIRE ND1002181 TYPE 2, CLASS 4, T2, 22AWG WHITE (CONDUCTORS MARKED R AND L RESPECTIVELY, 152 FT. TOTAL LENGTH.
	4	1	1900974-002	WIRE ND1002181 TYPE 1, CLASS 1, 22AWG 12 FT., TOTAL LENGTH.
	5	1	1900974-003	WIRE ND1002181 TYPE 1, CLASS 1, 20AWG, 50 FT. TOTAL LENGTH.
10	6	34	1010490-200	INSULATION-SLEEVING, ELEC
10	7	4	1000243-011	FERRULE-ELEC COND
10	8	4	1000242-009	FERRULE-ELEC COND
10	9	34	1016006-001	SPLICE REDUCER
10	10	1	1016128-011	BAND-IDENTIFICATION
10	11	22	1010490-198	INSULATION-SLEEVING ELEC
	12	1	1900974-004	ZIPPER TUBING ND1002155, TYPE 1, PLASTIC, FLEXIBLE .615 IN. DIA. 38 FT. TOTAL LENGTH
10	13	2	1016128-041	BAND IDENTIFICATION
	14	AR	MIL-T-713	LACING TAPE, TYPE P, CLASS 2, BLACK (ES-2732 NO. 18)
10	15	38	1010464- 1	CONTACTS, PINS

MANNED SPACECRAFT CENTER HOUSTON, TEXAS | SIZE A | 1900974
SCALE - NONE | REV LTR E | SHEET 5 OF 14

MIL 2084 4-63

LIST OF MATERIALS

PENNANT NOTE	ITEM	QTY	PART NO	DESCRIPTION
20	16			CONTACT SOCKETS
21	17	AR	1897147-106,	108 AND 112, CABLE CLAMP SLEEVE
	18		1900974-005	WIRE 1002181 TYPE 3, CLASS 1, T3 20AWG, WHITE (MARKED L, R, AND Y RESPECTIVELY) 344 FT. TOTAL LENGTH

MANNED SPACECRAFT CENTER HOUSTON, TEXAS | SIZE A | 1900974
SCALE - NONE | REV LTR C | SHEET 6 OF 14

MIL 2084 4-63

CONDUCTOR INDIVIDUAL LENGTH NUMBER	ITEM NO.	2	FROM CUT WIRE OR SHIELD STRIP WIRE OR JACKET CIRCUIT POINT	2	T N	2	TERMINATION SPEC 1	ITEM NO.	NO.	TO CUT WIRE OR SHIELD STRIP WIRE OR JACKET CIRCUIT POINT	2	T N	2	TERMINATION SPEC 1	ITEM NO.	NO.
A 1	3			230		200	7	8	5		230		200	A 11		7A
							A 11									
A 1A	4		SHLD A1	25N						E1	25N					
A 1L			P1-C*	19N		16				P2-20	10N			15		
A 1R			P1-B*	19N		16				P2-14	10N			15		
A 2			DELETED													
A 3			DELETED													
A 4			DELETED													
A 5			DELETED													
			DELETED													
A 5A			DELETED													
A 5L			DELETED													
A 5R			DELETED													
A 6	3			230		200	7	8	5		230		200	A 11		7A
							A 11									
A 6A	4		SHLD A6	25N						E1	25N					
A 6L			P1-H*	19N		16				P2-21	10N			15		
A 6R			P1-G*	19N		16				P2-15	10N			15		

1 THE STD CONDUCTOR TERMINATION FIGURES ARE PER
2 DIMENSIONS ARE IN INCHES AND TWO PLACE DECIMALS.

MANNED SPACECRAFT CENTER HOUSTON, TEXAS | SIZE A | 1900974
SCALE - NONE | REV LTR C | SHEET 7 OF 14

MIL 2085 - 4-63 WIR

CONDUCTOR INDIVIDUAL LENGTH NUMBER	ITEM NO.	2	FROM CUT WIRE OR SHIT D STRIP WIRE OR JACKET CIRCUIT POINT	2	T N	2	TERMINATION SPEC 1	ITEM NO.	NO.	TO CUT WIRE OR SHIELD STRIP WIRE OR JACKET CIRCUIT POINT	2	T N	2	TERMINATION SPEC 1	ITEM NO.	NO.
A 7	3			230		200	7	8	5		230		200	A 11		7A
							A 11									
A 7A	4		SHLD A7	25N						E1	25N					
A 7L			P1-P*	19N		16				P2- 5	10N			15		
A 7R			P1-N*	19N		16				P2- 6	10N			15		
A 8			DELETED													
A 9			DELETED													
			DELETED													
A 9A			DELETED													
A 9L			DELETED													
A 9R			DELETED													
A 10			DELETED													
A 11			DELETED													
			DELETED													
A 11A			DELETED													
A 11L			DELETED													
A 11R			DELETED													
A 12			DELETED													

1 THE STD CONDUCTOR TERMINATION FIGURES ARE PER
2 DIMENSIONS ARE IN INCHES AND TWO PLACE DECIMALS.

MANNED SPACECRAFT CENTER HOUSTON, TEXAS | SIZE A | 1900974
SCALE - NONE | REV LTR C | SHEET 8 OF 14

MIL 2085 - 4-63 WIR

G1B CABLE W18 C 1900974

CONDUCTOR NUMBER	INDIVIDUAL LENGTH ITEM NO.	3	FROM CUT WIRE OR SHIELD STRIP WIRE OR JACKET CIRCUIT POINT	2	T I N	3	TERMINATION SPEC. 1 ITEM NO.	NO.	TO CUT WIRE OR SHIELD STRIP WIRE OR JACKET CIRCUIT POINT	2	T I N	3	TERMINATION SPEC. 1 ITEM NO.	NO.
A 13			DELETED											
A 14			DELETED											
A 15			DELETED											
A 16			DELETED											
A 17	3			28G	25G	7	8	5		28G	25G	A 11	7A	
						A 11								
A 17A	4		SHLD A17	25N					E1	25N				
A 17L			P1-A*	19N		16			P2- 7	10N		15		
A 17R			P1-Z	19N		16			P2-13	10N		15		
A 18			DELETED											
A 19			DELETED											
A 20			DELETED											
A 21			DELETED											
A 22			DELETED											
A 22A			DELETED											
A 22L			DELETED											
A 22R			DELETED											
A 23			DELETED											

1 THE STD CONDUCTOR TERMINATION FIGURES ARE PER
2 DIMENSIONS ARE IN INCHES AND TWO PLACE DECIMALS.

MANNED SPACECRAFT CENTER HOUSTON, TEXAS | SIZE A | 1900974
SCALE - NONE | REV LTR C | SHEET 9 OF 14

MIL 2088 - 4-63 WIR

G1B CABLE W18 D 1900974

CONDUCTOR NUMBER	INDIVIDUAL LENGTH ITEM NO.	3	FROM CUT WIRE OR SHIELD STRIP WIRE OR JACKET CIRCUIT POINT	2	T I N	3	TERMINATION SPEC. 1 ITEM NO.	NO.	TO CUT WIRE OR SHIELD STRIP WIRE OR JACKET CIRCUIT POINT	2	T I N	3	TERMINATION SPEC. 1 ITEM NO.	NO.
A 23A			DELETED											
A 23L			DELETED											
A 23R			DELETED											
A 24			DELETED											
A 24A			DELETED											
A 24L			DELETED											
A 24R			DELETED											
A 25			DELETED											
A 25A			DELETED											
A 25L			DELETED											
A 25R			DELETED											
A 26	4		P1-J*	19N		16			E1	25N				
A 27	4		E1	25N					E2	25N				
A 28	4		P2-19	10N		15			P2-26	10N		15		
A 29			DELETED											
A 30	5		P1-T	19N		16			E3	25N				
A 31	4		E3	25N					P2-17	10N		15		
A 32			DELETED											

1 THE STD CONDUCTOR TERMINATION FIGURES ARE PER
2 DIMENSIONS ARE IN INCHES AND TWO PLACE DECIMALS.

MANNED SPACECRAFT CENTER HOUSTON, TEXAS | SIZE A | 1900974
SCALE - NONE | REV LTR D | SHEET 10 OF 14

MIL 2088 - 4-63 WIR

G1B CABLE W18 C 1900974

CONDUCTOR NUMBER	INDIVIDUAL LENGTH ITEM NO.	3	FROM CUT WIRE OR SHIELD STRIP WIRE OR JACKET CIRCUIT POINT	2	T I N	3	TERMINATION SPEC. 1 ITEM NO.	NO.	TO CUT WIRE OR SHIELD STRIP WIRE OR JACKET CIRCUIT POINT	2	T I N	3	TERMINATION SPEC. 1 ITEM NO.	NO.
A 33			DELETED											
A 34	4		P2-33	10N		15			P2-34	10N		15		
A 35	5		P1-R*	19N		16			E4	25N				
A 36	18					6						6		
A 36L			E4	25N					E5	25N				
A 36R			E4	25N					E5	25N				
A 36Y			E4	25N					E5	25N				
A 37	4		E5	25N					P2-32	10N		15		
A 38	5		P1-Q*	19N		16			E6	25N				
A 39	18					6						6		
A 39L			E6	25N					E7	25N				
A 39R			E6	25N					E7	25N				
A 39Y			E6	25N					E7	25N				
A 40	4		E7	25N					P2-24	10N		15		
A 41	5		P1-S*	19N		16			E8	25N				
A 42	18					6						6		
A 42L			E8	25N					E9	25N				
A 42R			E8	25N					E9	25N				

1 THE STD CONDUCTOR TERMINATION FIGURES ARE PER
2 DIMENSIONS ARE IN INCHES AND TWO PLACE DECIMALS.

MANNED SPACECRAFT CENTER HOUSTON, TEXAS | SIZE A | 1900974
SCALE - NONE | REV LTR D | SHEET 11 OF 14

MIL 2088 - 4-63 WIR

G1B CABLE W18 C 1900974

CONDUCTOR NUMBER	INDIVIDUAL LENGTH ITEM NO.	3	FROM CUT WIRE OR SHIELD STRIP WIRE OR JACKET CIRCUIT POINT	2	T I N	3	TERMINATION SPEC. 1 ITEM NO.	NO.	TO CUT WIRE OR SHIELD STRIP WIRE OR JACKET CIRCUIT POINT	2	T I N	3	TERMINATION SPEC. 1 ITEM NO.	NO.
A 42Y			E8	25N					E9	25N				
A 43	4		E9	25N					P2-31	10N		15		
A 44	5		P1-A	19N		16			E10	25N				
A 45	18					6						6		
A 45L			E10	25N					E11	25N				
A 45R			E10	25N					E11	25N				
A 45Y			E10	25N					E11	25N				
A 46	4		E11	25N					P2-23	10N		15		
A 47	5		P1-T*	19N		16			E12	25N				
A 48	18					6						6		
A 48L			E12	25N					E13	25N				
A 48R			E12	25N					E13	25N				
A 48Y			E12	25N					E13	25N				
A 49	4		E13	25N					P2-35	10N		15		
A 50	5		P1-F*	19N		16			E14	25N				
A 51	18					6						6		
A 51L			E14	25N					E15	25N				
A 51R			E14	25N					E15	25N				

1 THE STD CONDUCTOR TERMINATION FIGURES ARE PER
2 DIMENSIONS ARE IN INCHES AND TWO PLACE DECIMALS.

MANNED SPACECRAFT CENTER HOUSTON, TEXAS | SIZE A | 1900974
SCALE - NONE | REV LTR C | SHEET 12 OF 14

MIL 2088 - 4-63 WIR

G1B CABLE W14 D 1900974

CONDUCTOR INDIVIDUAL LENGTH NUMBER	ITEM NO.	2	FROM CUT WIRE OR SHIELD STRIP WIRE OR JACKET CIRCUIT POINT	2	TYPE 2	TERMINATION SPEC. 3 ITEM NO	NO.	TO CUT WIRE OR SHIELD STRIP WIRE OR JACKET CIRCUIT POINT	3	TYPE 2	TERMINATION SPEC 1 ITEM NO.	NO.
A 51Y			E14		25N			E15		25N		
A 52	4		E15		25N			P2-36		10N	15	
A 53	5		P1-E*		19N	16		E16		25N		
A 54	18					6					6	
A 54L			E16		25N			E17		25N		
A 54R			E16		25N			E17		25N		
A 54Y			E16		25N			E17		25N		
A 55	4		E17		25N			P2-28		10N	15	
A 56	5		P1-B		19N	16		E18		25N		
A 57	18					6					6	
A 57L			E18		25N			E19		25N		
A 57R			E18		25N			E19		25N		
A 57Y			E18		25N			E19		25N		
A 58	4		E19		25N			P2-27		10N	15	
A 59	4		E3		25N			P2-18		10N	15	
A 60	4		E3		25N			P2-25		10N	15	
A 61	4		P2- 9		10N	15		P2-10		10N	15	

1 THE STD CONDUCTOR TERMINATION FIGURES ARE PER
2 DIMENSIONS ARE IN INCHES AND TWO PLACE DECIMALS.

MIL 2089 - 4-82 WIR

MANNED SPACECRAFT CENTER HOUSTON, TEXAS	SIZE A	1900974
SCALE - NONE	REV LTR D	SHEET 13 OF 14

REVISIONS					
SYM	ZONE	DESCRIPTION	CHG NO.	DATE	APPD.

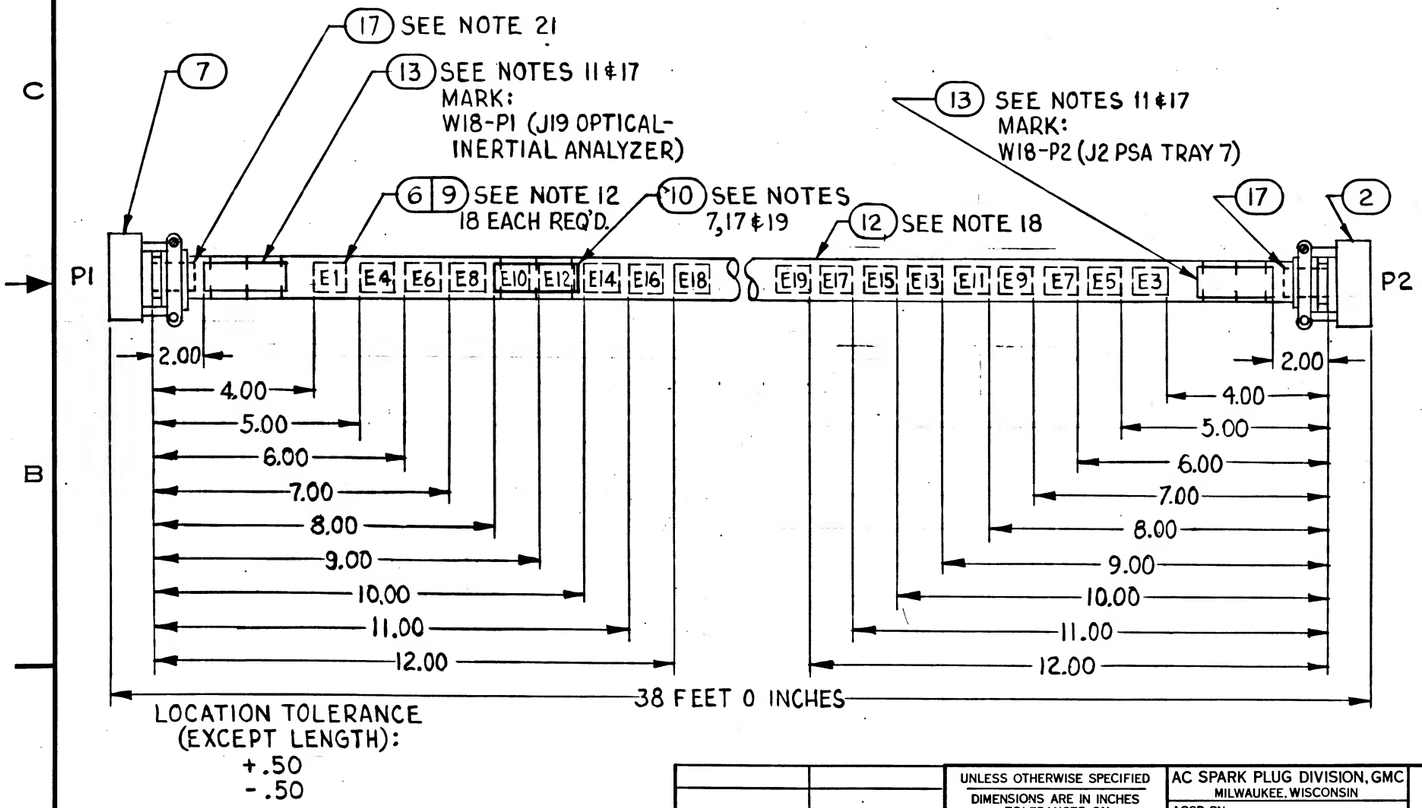

NEXT ASSY	USED ON	UNLESS OTHERWISE SPECIFIED DIMENSIONS ARE IN INCHES TOLERANCES ON FRACTIONS + — DECIMALS + — ANGLES + —	AC SPARK PLUG DIVISION, GMC MILWAUKEE, WISCONSIN	MANNED SPACECRAFT CENTER HOUSTON, TEXAS
APPLICATION		DO NOT SCALE THIS DRAWING	ACSP PN	CABLE INTERCONNECT W18 1SS, OSS & G & N TESTING
			DRAWN T. KOZMATKA DATE 1NOV63	
			CHECKED E. HINTZ 12NOV63	
			APPROVAL R.B. LIGON 13NOV63	
			APPROVAL L. GEDIMAN 3JAN64	
		MATERIAL	NASA APPROVAL J. BARNARD	CODE IDENT NO. / SIZE C / 1900974
		CONTRACT NAS 9-497	MIT APPROVAL W. KUPFER	SCALE NONE / SHEET 14 OF 14

MIL 1077C—P

1900974

APPLICATION		REVISIONS			
NEXT ASSY	USED ON	SYM	DESCRIPTION	DATE	APPROVAL
1901308	1900005-011	A	CHANGE IN ACCORDANCE WITH CM 193385 TDRR 09707	6 FEB 64	JJJ
		B	CHANGE IN ACCORDANCE WITH CM 195507 TDRR 09708	12 MAR 64	RJF
		C	CHANGE IN ACCORDANCE WITH CM 195890 TDRR 09708	2 APR 64	JWP MEM
		D	CHANGE IN ACCORDANCE WITH CM 196099 TDRR 09708	27 APR 64	HC
		(F) E	CHANGE IN ACCORDANCE WITH CM 196920 REVISED PER TDRR 09709	21 MAY 64	JJJ
		F	CHANGE IN ACCORDANCE WITH CM 198677 TDRR 12359	27 JUL 64	JJJ MEM

Y2-64

FOR INFORMATION ONLY

CLASS B RELEASE TDR No. 05663 DATE 1/7/64

REV																			
SHEET																			
REV STATUS	REV	F	F	F	F	F	F	F	F	F	F	F	F	F	F	F	F	F	F
OF SHEETS	SHEET	1	2	3	4	5	6	7	8	9	10	11	12	13	14	15	16	17	18

AC SPARK PLUG DIVISION, GMC
MILWAUKEE, WISCONSIN

MANNED
SPACECRAFT CENTER
HOUSTON, TEXAS

ACSP PN

DRAWN DATE 1 NOV 63
CHECKED 12 NOV 63
APPROVAL 13 NOV 63
APPROVAL 1/3/64

CABLE INTERCONNECT W18
1SS, OSS & G & N TESTING

NASA APPROVAL
MIT APPROVAL

CODE IDENT NO.	SIZE		REV
	A	1900974	F

CONTRACT NAS 9-497 SCALE NONE SHEET 1 OF 18

APPLICATION		REVISIONS			
NEXT ASSY	USED ON	SYM	DESCRIPTION	DATE	APPROVAL
1901308	1900005-011	A	CHANGE IN ACCORDANCE WITH CM 193385 TDR R 09707	6 FEB 64	JJJ
		B	CHANGE IN ACCORDANCE WITH CM 195507 TDR R 09708	12 MAR 64	RJF
		C	CHANGE IN ACCORDANCE WITH CM 195890 TDR R 09708	2 APR 64	JWP
		D	CHANGE IN ACCORDANCE WITH CM 196009 TDR R 09708	29 APR 64	HC
		E	CHANGE IN ACCORDANCE WITH CM 196920 REVISED PER TDR R 09709	21 MAY 64	JJJ
		F	CHANGE IN ACCORDANCE WITH CM 198677 TDR R 12359	27 JUL 64	JJJ

Y2-64

FOR INFORMATION ONLY

CLASS B RELEASE TDR No. 05663 DATE 1/7/64

REV																			
SHEET																			
REV STATUS	REV	F	F	F	F	F	F	F	F	F	F	F	F	F	F	F	F	F	F
OF SHEETS	SHEET	1	2	3	4	5	6	7	8	9	10	11	12	13	14	15	16	17	18

AC SPARK PLUG DIVISION, GMC
MILWAUKEE, WISCONSIN

ACSP PN

DRAWN DATE 12 NOV 63
CHECKED 12 NOV 63
APPROVAL 13 NOV 63
APPROVAL 1/3/64

NASA APPROVAL
MIT APPROVAL

CONTRACT NAS 9-497

MANNED
SPACECRAFT CENTER
HOUSTON, TEXAS

CABLE INTERCONNECT W18
1SS, OSS & G & N TESTING

CODE IDENT NO.	SIZE		REV
	A	1900974	B

SCALE NONE

SHEET 1 OF 18

PENNANT NOTE — GENERAL NOTES

1 SEE CONDUCTOR CHART. PENNANT NOTE 1.

2 SEE CONDUCTOR CHART. PENNANT NOTE 2.

3 INTERPRET DRAWING IN ACCORDANCE WITH STANDARDS PRESCRIBED BY MIL-D-70327.

4 MARK CONDUCTOR IDENTIFICATION ON SINGLE CONDUCTORS PER ND1002019 OMITTING ALL SUFFIX LETTERS EXCEPT A AND B.

5 SPACING OF CONDUCTOR IDENTIFICATION SHALL BE EVERY 15 INCHES MAX. AND AT EACH TERMINATION.

6 SPIRALLING OF THE MARKING IS ALLOWED.

7 IDENTIFY USING DRAWING NO. AND REVISION LETTER PER MIL-STD-130 (ES-267). .12 INCH HIGH CHARACTERS WHITE.

8 Y OR N IN TINNED COLUMN INDICATES YES OR NO.

9 A LETTER WITH AN ASTERISK SUFFIX. INDICATES A LOWER CASE LETTER.

10 VENDOR ITEM - SEE SPECIFICATION CONTROL DRAWING.

11 MARK IDENTIFICATION BAND WITH REFERENCE DESIGNATION AS NOTED .12 INCH HIGH COLOR WHITE. HOT IMPRESSION STAMPING PER ND1002019. CENTRALIZE.

12 MARK SLEEVING WITH REFERENCE DESIGNATIONS AS SHOWN .12 INCH HIGH. COLOR BLACK PER ND1002019.

13 MARK SLEEVING OF MULTI-CONDUCTORS WITH THE CONDUCTOR NUMBER .12 INCH HIGH. COLOR BLACK. PER ND1002019 WHEN SLEEVING ITEM NUMBERS FOLLOW AN A OR T IN THE ACCESSORIES ITEM NUMBER FIELD.

MANNED SPACECRAFT CENTER HOUSTON, TEXAS	SIZE A	1900974	
SCALE-NONE	REV LTR F		SHEET 2 OF 18

PENNANT NOTE — GENERAL NOTES

14 A OR T PREFIX IN THE ACCESSORIES ITEM NUMBER COLUMN INDICATES THE READING POSITION AWAY FROM TERMINATION OR TOWARD TERMINATION RESPECTIVELY. OF THE WIRE MARKER SLEEVE.

15 THE SUFFIX LETTER OF A CONDUCTOR IDENTIFICATION NUMBER INDICATES CONDUCTOR SHIELDING. COLOR. OR MARKING.
A - FROM END SHIELD
L - WHITE WITH BLUE TRACER OR LETTER L
R - WHITE WITH RED TRACER OR LETTER R

16 ASSEMBLE CONTACTS IN ALL CONNECTOR GROMMET HOLES.

17 SECURE TO CABLE USING ITEM 14. MARKING TO READ AWAY FROM CONNECTOR.

18 SEAL ZIPPER TUBING PER ND1002155

19 SERIALIZE PER ND1002023

20 ITEM 16 FURNISHED WITH ITEM 1.

21 ITEM 17 SHALL BE SHORTENED WHEN NECESSARY TO AVOID INTERFERENCE WITH FERRULES AND MAY BE CUT LENGTHWISE ON ONE SIDE. SELECT ONE OR MORE OF ITEM 17 AS REQUIRED TO FIT.

22 THE FOLLOWING MULTICONDUCTORS ARE TO BE TWISTED TOGETHER WITH THE BEST COMMERCIAL PRACTICE. THEY SHALL BE TWISTED WITH A LAY NOT GREATER THAN 16 TIMES NOR LESS THAN 8 TIMES THE PITCH DIAMETER. AS TWISTED PAIRS. CONDUCTORS (A36 AND A39). (A42 AND A45). (A51 AND A54) AND (A48 AND A57)

23 SEE NOTES 10 AND 16

MANNED SPACECRAFT CENTER HOUSTON, TEXAS	SIZE A	1900974	
SCALE-NONE	REV LTR F		SHEET 3 OF 18

PENNANT NOTE — GENERAL NOTES

TOLERANCE CHART. UNLESS OTHERWISE SPECIFIED —

APPLICABLE LENGTH FOR WIRE OR CABLE. STRIP WIRE. STRIP JACKET. CUT WIRE OR CUT SHIELD.	TOLERANCE: WIRE OR CABLE	STRIP WIRE	STRIP JACKET	CUT WIRE	CUT SHIELD
UNDER 1 INCH	+.06-.00	+.03-.00	+.06-.06	+.06-.06	+.06-.06
1 INCH TO 6 INCHES	+.50-.00	+.06-.00	+.25-.25	+.25-.25	+.25-.25
6 INCHES TO 6 FEET	+1.00-.00		+.50-.50	+.50-.50	+.50-.50
OVER 6 FEET	+2.00-.00				

MANNED SPACECRAFT CENTER HOUSTON, TEXAS	SIZE A	1900974	
SCALE-NONE	REV LTR F		SHEET 4 OF 18

PENNANT NOTE — LIST OF MATERIALS

NOTE	ITEM	QTY	PART NO	DESCRIPTION
16	1	1	M83126F-20-41SW (1897044-411)	CONNECTOR PLUG
23	2	1	1010621- 2	CONNECTOR PLUG
	3	1	1900974-001	WIRE ND1002181 TYPE 2. CLASS 4. T2. 22AWG WHITE (CONDUCTORS MARKED R AND L RESPECTIVELY. 152 FT. TOTAL LENGTH.
	4	1	1900974-002	WIRE ND1002181 TYPE 1. CLASS 1. 22AWG 30 FT.. TOTAL LENGTH.
	5	1	1900974-003	WIRE ND1002181 TYPE 1. CLASS 1. 20AWG. 88 FT. TOTAL LENGTH.
10	6	34	1010490-200	INSULATION-SLEEVING. ELEC
10	7	16	1000243-011	FERRULE-ELEC COND
10	8	16	1000242-009	FERRULE-ELEC COND
10	9	34	1016006-001	SPLICE REDUCER
10	10	1	1016128-011	BAND-IDENTIFICATION
10	11	32	1010490-198	INSULATION-SLEEVING ELEC
	12	1	1900974-004	ZIPPER TUBING ND1002155. TYPE 1. PLASTIC. FLEXIBLE .75 IN. DIA. 38 FT. TOTAL LENGTH
10	13	2	1016128-041	BAND IDENTIFICATION
	14	AR	MIL-T-713	LACING TAPE. TYPE P. CLASS 2. BLACK (ES-2732 NO. 18)
10	15	38	1010464- 1	CONTACTS. PINS

MANNED SPACECRAFT CENTER HOUSTON, TEXAS	SIZE A	1900974	
SCALE-NONE	REV LTR F		SHEET 5 OF 18

PENNANT NOTE — GENERAL NOTES

1 SEE CONDUCTOR CHART, PENNANT NOTE 1.

2 SEE CONDUCTOR CHART, PENNANT NOTE 2.

3 INTERPRET DRAWING IN ACCORDANCE WITH STANDARDS PRESCRIBED BY MIL-D-70327.

4 MARK CONDUCTOR IDENTIFICATION ON SINGLE CONDUCTORS PER ND1002019 OMITTING ALL SUFFIX LETTERS EXCEPT A AND B.

5 SPACING OF CONDUCTOR IDENTIFICATION SHALL BE EVERY 15 INCHES MAX. AND AT EACH TERMINATION.

6 SPIRALLING OF THE MARKING IS ALLOWED.

7 IDENTIFY USING DRAWING NO. AND REVISION LETTER PER MIL-STD-130 (ES-267). .12 INCH HIGH CHARACTERS WHITE.

8 Y OR N IN TINNED COLUMN INDICATES YES OR NO.

9 A LETTER WITH AN ASTERISK SUFFIX, INDICATES A LOWER CASE LETTER.

10 VENDOR ITEM - SEE SPECIFICATION CONTROL DRAWING.

11 MARK IDENTIFICATION BAND WITH REFERENCE DESIGNATION AS NOTED .12 INCH HIGH COLOR WHITE, HOT IMPRESSION STAMPING PER ND1002019. CENTRALIZE.

12 MARK SLEEVING WITH REFERENCE DESIGNATIONS AS SHOWN .12 INCH HIGH, COLOR BLACK PER ND1002019.

13 MARK SLEEVING OF MULTI-CONDUCTORS WITH THE CONDUCTOR NUMBER .12 INCH HIGH, COLOR BLACK, PER ND1002019 WHEN SLEEVING ITEM NUMBERS FOLLOW AN A OR T IN THE ACCESSORIES ITEM NUMBER FIELD.

MANNED SPACECRAFT CENTER HOUSTON, TEXAS	SIZE A	1900974	
SCALE - NONE	REV LTR F		SHEET 2 OF 18

PENNANT NOTE — GENERAL NOTES

14 A OR T PREFIX IN THE ACCESSORIES ITEM NUMBER COLUMN INDICATES THE READING POSITION AWAY FROM TERMINATION OR TOWARD TERMINATION RESPECTIVELY, OF THE WIRE MARKER SLEEVE.

15 THE SUFFIX LETTER OF A CONDUCTOR IDENTIFICATION NUMBER INDICATES CONDUCTOR SHIELDING, COLOR, OR MARKING.
A - FROM END SHIELD
L - WHITE WITH BLUE TRACER OR LETTER L
R - WHITE WITH RED TRACER OR LETTER R

16 ASSEMBLE CONTACTS IN ALL CONNECTOR GROMMET HOLES.

17 SECURE TO CABLE USING ITEM 14. MARKING TO READ AWAY FROM CONNECTOR.

18 SEAL ZIPPER TUBING PER ND1002155

19 SERIALIZE PER ND1002023

20 ITEM 16 FURNISHED WITH ITEM 14.

21 ITEM 17 SHALL BE SHORTENED WHEN NECESSARY TO AVOID INTERFERENCE WITH FERRULES AND MAY BE CUT LENGTHWISE ON ONE SIDE. SELECT ONE OR MORE OF ITEM 17 AS REQUIRED TO FIT.

22 THE FOLLOWING MULTICONDUCTORS ARE TO BE TWISTED TOGETHER WITH THE BEST COMMERCIAL PRACTICE. THEY SHALL BE TWISTED WITH A LAY NOT GREATER THAN 14 TIMES NOR LESS THAN 8 TIMES THE PITCH DIAMETER. AS TWISTED PAIRS, CONDUCTORS (A36 AND A39), (A42 AND A45), (A51 AND A54) AND (A48 AND A57)

23 SEE NOTES 10 AND 16

MANNED SPACECRAFT CENTER HOUSTON, TEXAS	SIZE A	1900974	
SCALE - NONE	REV LTR F		SHEET 3 OF 18

PENNANT NOTE — GENERAL NOTES

TOLERANCE CHART, UNLESS OTHERWISE SPECIFIED —

APPLICABLE LENGTH FOR WIRE OR CABLE, STRIP WIRE, STRIP JACKET, CUT WIRE OR CUT SHIELD.	TOLERANCE				
	WIRE OR CABLE	STRIP WIRE	STRIP JACKET	CUT WIRE	CUT SHIELD
UNDER 1 INCH	+ .06-.00	+.03-.00	+.06-.06	+.06-.06	+.06-.06
1 INCH TO 6 INCHES	+ .50-.00	+.06-.00	+.25-.25	+.28-.25	+.25-.25
6 INCHES TO 6 FEET	+1.00-.00		+.50-.50	+.50-.50	+.50-.50
OVER 6 FEET	+2.00-.00				

MANNED SPACECRAFT CENTER HOUSTON, TEXAS	SIZE A	1900974	
SCALE - NONE	REV LTR F		SHEET 4 OF 18

PENNANT NOTE — LIST OF MATERIALS

NOTE	ITEM	QTY	PART NO	DESCRIPTION
16	1	1	MS3126F-20-41SW (1897044-411)	CONNECTOR PLUG
23	2	1	1010621- 2	CONNECTOR PLUG
	3	1	1900974-001	WIRE ND1002181 TYPE 2, CLASS 4, T2, 22AWG WHITE (CONDUCTORS MARKED R AND L RESPECTIVELY, 152 FT. TOTAL LENGTH.
	4	1	1900974-002	WIRE ND1002181 TYPE 1, CLASS 1, 22AWG 30 FT., TOTAL LENGTH.
	5	1	1900974-003	WIRE ND1002181 TYPE 1, CLASS 1, 20AWG, 88 FT. TOTAL LENGTH.
10	6	34	1010490-200	INSULATION-SLEEVING, ELEC
10	7	16	1000243-011	FERRULE-ELEC COND
10	8	16	1000242-009	FERRULE-ELEC COND
10	9	34	1016006-001	SPLICE REDUCER
10	10	1	1016128-011	BAND-IDENTIFICATION
10	11	32	1010490-198	INSULATION-SLEEVING ELEC
	12	1	1900974-004	ZIPPER TUBING ND1002155, TYPE 1, PLASTIC, FLEXIBLE .75 IN. DIA. 38 FT. TOTAL LENGTH
10	13	2	1016128-041	BAND IDENTIFICATION
	14	AR	MIL-T-713	LACING TAPE, TYPE P, CLASS 2, BLACK (ES-2732 NO. 18)
10	15	38	1010464- 1	CONTACTS, PINS

MANNED SPACECRAFT CENTER HOUSTON, TEXAS	SIZE A	1900974	
SCALE - NONE	REV LTR F		SHEET 5 OF 18

G18 CABLE W18 F 1900974

CONDUCTOR NUMBER	INDIVIDUAL LENGTH ITEM NO 2	FROM CUT WIRE OR SHIELD STRIP WIRE OR JACKET 1 2 CIRCUIT POINT 3 4	FROM TERMINATION SPEC 1 NO ITEM NO	TO CUT WIRE OR SHIELD STRIP WIRE OR JACKET 1 2 CIRCUIT POINT 3 4	TO TERMINATION SPEC 1 NO ITEM NO
A 23A		DELETED			
A 23L		DELETED			
A 23R		DELETED			
A 24		DELETED			
A 24A		DELETED			
A 24L		DELETED			
A 24R		DELETED			
A 25		DELETED			
A 25A		DELETED			
A 25L		DELETED			
A 25R		DELETED			
A 26	4	P1-J*	19N 16	E1	25N
A 27		DELETED			
A 28	4	P2-19	10N 15	P2-26	10N 15
A 29		DELETED			
A 30	5	P1-T	19N 16	E3	25N
A 31	4	E3	25N	P2-17	10N 15
A 32		DELETED			

1. THE STD CONDUCTOR TERMINATION FIGURES ARE PER
2. DIMENSIONS ARE IN INCHES AND TWO PLACE DECIMALS.

MANNED SPACECRAFT CENTER HOUSTON TEXAS | SIZE A | 1900974
SCALE-NONE | REV LTR F | SHEET 10 OF 18

G18 CABLE W18 F 1900974

CONDUCTOR NUMBER	INDIVIDUAL LENGTH ITEM NO 2	FROM CUT WIRE OR SHIELD STRIP WIRE OR JACKET 1 2 CIRCUIT POINT 3 4	FROM TERMINATION SPEC 1 NO ITEM NO	TO CUT WIRE OR SHIELD STRIP WIRE OR JACKET 1 2 CIRCUIT POINT 3 4	TO TERMINATION SPEC 1 NO ITEM NO
A 33		DELETED			
A 34	4	P2-33	10N 15	P2-34	10N 15
A 35	5	P1-R*	19N 16	E4	25N
A 36		DELETED			
A 36L		DELETED			
A 36R		DELETED			
A 36Y		DELETED			
A 37	4	E5	25N	P2-32	10N 15
A 38	5	P1-Q*	19N 16	E6	25N
A 39		DELETED			
A 39L		DELETED			
A 39R		DELETED			
A 39Y		DELETED			
A 40	4	E7	25N	P2-24	10N 15
A 41	5	P1-S*	19N 16	E8	25N
A 42		DELETED			
A 42L		DELETED			
A 42R		DELETED			

1. THE STD CONDUCTOR TERMINATION FIGURES ARE PER
2. DIMENSIONS ARE IN INCHES AND TWO PLACE DECIMALS.

MANNED SPACECRAFT CENTER HOUSTON TEXAS | SIZE A | 1900974
SCALE-NONE | REV LTR F | SHEET 11 OF 18

G18 CABLE W18 F 1900974

CONDUCTOR NUMBER	INDIVIDUAL LENGTH ITEM NO 2	FROM CUT WIRE OR SHIELD STRIP WIRE OR JACKET 1 2 CIRCUIT POINT 3 4	FROM TERMINATION SPEC 1 NO ITEM NO	TO CUT WIRE OR SHIELD STRIP WIRE OR JACKET 1 2 CIRCUIT POINT 3 4	TO TERMINATION SPEC 1 NO ITEM NO
A 42Y		DELETED			
A 43	4	E9	25N	P2-31	10N 15
A 44	5	P1-A	19N 16	E10	25N
A 45		DELETED			
A 45L		DELETED			
A 45R		DELETED			
A 45Y		DELETED			
A 46	4	E11	25N	P2-23	10N 15
A 47	5	P1-T*	19N 16	E12	25N
A 48		DELETED			
A 48L		DELETED			
A 48R		DELETED			
A 48Y		DELETED			
A 49	4	E13	25N	P2-35	10N 15
A 50	5	P1-F*	19N 16	E14	25N
A 51		DELETED			
A 51L		DELETED			
A 51R		DELETED			

1. THE STD CONDUCTOR TERMINATION FIGURES ARE PER
2. DIMENSIONS ARE IN INCHES AND TWO PLACE DECIMALS

MANNED SPACECRAFT CENTER HOUSTON TEXAS | SIZE A | 1900974
SCALE-NONE | REV LTR F | SHEET 12 OF 18

G18 CABLE W18 F 1900974

CONDUCTOR NUMBER	INDIVIDUAL LENGTH ITEM NO 2	FROM CUT WIRE OR SHIELD STRIP WIRE OR JACKET 1 2 CIRCUIT POINT 3 4	FROM TERMINATION SPEC 1 NO ITEM NO	TO CUT WIRE OR SHIELD STRIP WIRE OR JACKET 1 2 CIRCUIT POINT 3 4	TO TERMINATION SPEC 1 NO ITEM NO
A 51Y		DELETED			
A 52	4	E15	25N	P2-36	10N 15
A 53	5	P1-E*	19N 16	E16	25N
A 54		DELETED			
A 54L		DELETED			
A 54R		DELETED			
A 54Y		DELETED			
A 55	4	E17	25N	P2-28	10N 15
A 56	5	P1-B	19N 16	E18	25N
A 57		DELETED			
A 57L		DELETED			
A 57R		DELETED			
A 57Y		DELETED			
A 58	4	E19	25N	P2-27	10N 15
A 59	4	E3	25N	P2-18	10N 15
A 60	4	E3	25N	P2-25	10N 15
A 61	4	P2- 9	10N 15	P2-10	10N 15
A 62	19		330 300 A 11 7A		330 300 7 8 5

1. THE STD CONDUCTOR TERMINATION FIGURES ARE PER
2. DIMENSIONS ARE IN INCHES AND TWO PLACE DECIMALS.

MANNED SPACECRAFT CENTER HOUSTON TEXAS | SIZE A | 1900974
SCALE-NONE | REV LTR F | SHEET 13 OF 18

GIB CABLE W18 F 1900974

CONDUCTOR NUMBER	INDIVIDUAL LENGTH	ITEM NO 2	FROM: CUT WIRE OR SHIELD / STRIP WIRE OR JACKET / CIRCUIT POINT 2	FROM: TERMINATION SPEC 1	FROM: ITEM NO	TO: CUT WIRE OR SHIELD / STRIP WIRE OR JACKET / CIRCUIT POINT 2	TO: TERMINATION SPEC 1	TO: ITEM NO
A 23A			DELETED					
A 23L			DELETED					
A 23R			DELETED					
A 24			DELETED					
A 24A			DELETED					
A 24L			DELETED					
A 24R			DELETED					
A 25			DELETED					
A 25A			DELETED					
A 25L			DELETED					
A 25R			DELETED					
A 26		4	P1-J*	19N	16	E1	25N	
A 27			DELETED					
A 28		4	P2-19	10N	15	P2-26	10N	15
A 29			DELETED					
A 30		5	P1-T	19N	16	E3	25N	
A 31		4	E3	25N		P2-17	10N	15
A 32			DELETED					

1. THE STD CONDUCTOR TERMINATION FIGURES ARE PER
2. DIMENSIONS ARE IN INCHES AND TWO PLACE DECIMALS.

MANNED SPACECRAFT CENTER HOUSTON TEXAS | SIZE A | 1900974
SCALE-NONE | REV LTR F | SHEET 10 OF 18

GIB CABLE W18 F 1900974

CONDUCTOR NUMBER	INDIVIDUAL LENGTH	ITEM NO 2	FROM: CUT WIRE OR SHIELD / STRIP WIRE OR JACKET / CIRCUIT POINT 2	FROM: TERMINATION SPEC 1	FROM: ITEM NO	TO: CUT WIRE OR SHIELD / STRIP WIRE OR JACKET / CIRCUIT POINT 2	TO: TERMINATION SPEC 1	TO: ITEM NO
A 33			DELETED					
A 34		4	P2-33	10N	15	P2-34	10N	15
A 35		5	P1-R*	19N	16	E4	25N	
A 36			DELETED					
A 36L			DELETED					
A 36R			DELETED					
A 36Y			DELETED					
A 37		4	E5	25N		P2-32	10N	15
A 38		5	P1-Q*	19N	16	E6	25N	
A 39			DELETED					
A 39L			DELETED					
A 39R			DELETED					
A 39Y			DELETED					
A 40		4	E7	25N		P2-24	10N	15
A 41		5	P1-S*	19N	16	E8	25N	
A 42			DELETED					
A 42L			DELETED					
A 42R			DELETED					

1. THE STD CONDUCTOR TERMINATION FIGURES ARE PER
2. DIMENSIONS ARE IN INCHES AND TWO PLACE DECIMALS.

MANNED SPACECRAFT CENTER HOUSTON TEXAS | SIZE A | 1900974
SCALE-NONE | REV LTR F | SHEET 11 OF 18

GIB CABLE W18 F 1900974

CONDUCTOR NUMBER	INDIVIDUAL LENGTH	ITEM NO 2	FROM: CUT WIRE OR SHIELD / STRIP WIRE OR JACKET / CIRCUIT POINT 2	FROM: TERMINATION SPEC 1	FROM: ITEM NO	TO: CUT WIRE OR SHIELD / STRIP WIRE OR JACKET / CIRCUIT POINT 2	TO: TERMINATION SPEC 1	TO: ITEM NO
A 42Y			DELETED					
A 43		4	E9	25N		P2-31	10N	15
A 44		5	P1-A	19N	16	E10	25N	
A 45			DELETED					
A 45L			DELETED					
A 45R			DELETED					
A 45Y			DELETED					
A 46		4	E11	25N		P2-23	10N	15
A 47		5	P1-T*	19N	16	E12	25N	
A 48			DELETED					
A 48L			DELETED					
A 48R			DELETED					
A 48Y			DELETED					
A 49		4	E13	25N		P2-35	10N	15
A 50		5	P1-F*	19N	16	E14	25N	
A 51			DELETED					
A 51L			DELETED					
A 51R			DELETED					

1. THE STD CONDUCTOR TERMINATION FIGURES ARE PER
2. DIMENSIONS ARE IN INCHES AND TWO PLACE DECIMALS

MANNED SPACECRAFT CENTER HOUSTON TEXAS | SIZE A | 1900974
SCALE-NONE | REV LTR F | SHEET 12 OF 18

GIB CABLE W18 F 1900974

CONDUCTOR NUMBER	INDIVIDUAL LENGTH	ITEM NO 2	FROM: CUT WIRE OR SHIELD / STRIP WIRE OR JACKET / CIRCUIT POINT 2	FROM: TERMINATION SPEC 1	FROM: ITEM NO	TO: CUT WIRE OR SHIELD / STRIP WIRE OR JACKET / CIRCUIT POINT 2	TO: TERMINATION SPEC 1	TO: ITEM NO
A 51Y			DELETED					
A 52		4	E15	25N		P2-36	10N	15
A 53		5	P1-E*	19N	16	E16	25N	
A 54			DELETED					
A 54L			DELETED					
A 54R			DELETED					
A 54Y			DELETED					
A 55		4	E17	25N		P2-28	10N	15
A 56		5	P1-B	19N	16	E18	25N	
A 57			DELETED					
A 57L			DELETED					
A 57R			DELETED					
A 57Y			DELETED					
A 58		4	E19	25N		P2-27	10N	15
A 59		4	E3	25N		P2-18	10N	15
A 60		4	E3	25N		P2-25	10N	15
A 61		4	P2- 9	10N	15	P2-10	10N	15
A 62		19	330	300	A 11	7A	330 300	7 8 5

1. THE STD CONDUCTOR TERMINATION FIGURES ARE PER
2. DIMENSIONS ARE IN INCHES AND TWO PLACE DECIMALS.

MANNED SPACECRAFT CENTER HOUSTON TEXAS | SIZE A | 1900974
SCALE-NONE | REV LTR F | SHEET 13 OF 18

APPLICATION		REVISIONS			
NEXT ASSY	USED ON	SYM	DESCRIPTION	DATE	APPROVAL
1901308	1900005-011	A	CHANGE IN ACCORDANCE WITH CM 193385 TDRR 09707	6 FEB 64	J J J W.A.
		B	CHANGE IN ACCORDANCE WITH CM 19550 TDRR 09708	12 MAR 64	RJF W.D.
		C	CHANGE IN ACCORDANCE WITH CM 19589 TDRR 09708	2 APR 64	JWP MEM
		D	CHANGE IN ACCORDANCE WITH CM 196009 TDRR 09708	21 APR 64	HC RZ
		E	CHANGE IN ACCORDANCE WITH CM 196920 REVISED PER TDRR 09709	21 MAY 64	J J J RZ
		F	CHANGE IN ACCORDANCE WITH CM 198677 TDRR 12358	27 JUL 64	J J J MEM
		G	CHANGE IN ACCORDANCE WITH CM 198928 REVISED PER TDRR 12351	30 JUL 64	J J J DCH

Y2-64

FOR INFORMATION ONLY

CLASS B RELEASE TDR No. 05663 DATE 1/7/64

REV																							
SHEET																							
REV STATUS	REV	G	F	F	F	G	F	F	F	F	F	F	F	G	F	F	F	F	F				
OF SHEETS	SHEET	1	2	3	4	5	6	7	8	9	10	11	12	13	14	15	16	17	18				

AC SPARK PLUG DIVISION, GMC
MILWAUKEE, WISCONSIN

MANNED
SPACECRAFT CENTER
HOUSTON, TEXAS

ACSP PN

DRAWN L. Wheeler DATE Nov 63
CHECKED 12 Nov 63
APPROVAL 13 Nov 63
APPROVAL L. Gutman 1/3/64

CABLE INTERCONNECT W18
1SS, OSS & G & N TESTING

NASA APPROVAL
MIT APPROVAL

CODE IDENT NO.	SIZE		REV
	A	1900974	G

CONTRACT NAS 9-497 SCALE NONE SHEET 1 OF 18

PENNANT NOTE — GENERAL NOTES

1 SEE CONDUCTOR CHART. PENNANT NOTE 1.

2 SEE CONDUCTOR CHART. PENNANT NOTE 2.

3 INTERPRET DRAWING IN ACCORDANCE WITH STANDARDS PRESCRIBED BY MIL-D-70327.

4 MARK CONDUCTOR IDENTIFICATION ON SINGLE CONDUCTORS PER ND1002019 OMITTING ALL SUFFIX LETTERS EXCEPT A AND B.

5 SPACING OF CONDUCTOR IDENTIFICATION SHALL BE EVERY 15 INCHES MAX. AND AT EACH TERMINATION.

6 SPIRALLING OF THE MARKING IS ALLOWED.

7 IDENTIFY USING DRAWING NO. AND REVISION LETTER PER MIL-STD-130 (ES-267). .12 INCH HIGH CHARACTERS WHITE.

8 Y OR N IN TINNED COLUMN INDICATES YES OR NO.

9 A LETTER WITH AN ASTERISK SUFFIX. INDICATES A LOWER CASE LETTER.

10 VENDOR ITEM - SEE SPECIFICATION CONTROL DRAWING.

11 MARK IDENTIFICATION BAND WITH REFERENCE DESIGNATION AS NOTED .12 INCH HIGH COLOR WHITE. HOT IMPRESSION STAMPING PER ND1002019. CENTRALIZE.

12 MARK SLEEVING WITH REFERENCE DESIGNATIONS AS SHOWN .12 INCH HIGH. COLOR BLACK PER ND1002019.

13 MARK SLEEVING OF MULTI-CONDUCTORS WITH THE CONDUCTOR NUMBER .12 INCH HIGH. COLOR BLACK. PER ND1002019 WHEN SLEEVING ITEM NUMBERS FOLLOW AN A OR T IN THE ACCESSORIES ITEM NUMBER FIELD.

MANNED SPACECRAFT CENTER HOUSTON, TEXAS	SIZE A	1900974	
SCALE - NONE	REV LTR F		SHEET 2 OF 18

PENNANT NOTE — GENERAL NOTES

14 A OR T PREFIX IN THE ACCESSORIES ITEM NUMBER COLUMN INDICATES THE READING POSITION AWAY FROM TERMINATION OR TOWARD TERMINATION RESPECTIVELY. OF THE WIRE MARKER SLEEVE.

15 THE SUFFIX LETTER OF A CONDUCTOR IDENTIFICATION NUMBER INDICATES CONDUCTOR SHIELDING. COLOR. OR MARKING.
A - FROM END SHIELD
L - WHITE WITH BLUE TRACER OR LETTER L
R - WHITE WITH RED TRACER OR LETTER R

16 ASSEMBLE CONTACTS IN ALL CONNECTOR GROMMET HOLES.

17 SECURE TO CABLE USING ITEM 14. MARKING TO READ AWAY FROM CONNECTOR.

18 SEAL ZIPPER TUBING PER ND1002153.

19 SERIALIZE PER ND1002023.

20 ITEM 16 FURNISHED WITH ITEM 1.

21 ITEM 17 SHALL BE SHORTENED WHEN NECESSARY TO AVOID INTERFERENCE WITH FERRULES AND MAY BE CUT LENGTHWISE ON ONE SIDE. SELECT ONE OR MORE OF ITEM 17 AS REQUIRED TO FIT.

22 THE FOLLOWING MULTICONDUCTORS ARE TO BE TWISTED TOGETHER WITH THE BEST COMMERCIAL PRACTICE. THEY SHALL BE TWISTED WITH A LAY NOT GREATER THAN 14 TIMES NOR LESS THAN 8 TIMES THE PITCH DIAMETER. AS TWISTED PAIRS. CONDUCTORS (A36 AND A39). (A42 AND A45). (A51 AND A54) AND (A46 AND A57).

23 SEE NOTES 10 AND 16

MANNED SPACECRAFT CENTER HOUSTON, TEXAS	SIZE A	1900974	
SCALE - NONE	REV LTR F		SHEET 3 OF 18

PENNANT NOTE — GENERAL NOTES

TOLERANCE CHART. UNLESS OTHERWISE SPECIFIED —

APPLICABLE LENGTH FOR WIRE OR CABLE. STRIP WIRE. STRIP JACKET. CUT WIRE OR CUT SHIELD.	TOLERANCE: WIRE OR CABLE	STRIP WIRE	STRIP JACKET	CUT WIRE	CUT SHIELD
UNDER 1 INCH	+.06-.00	+.03-.00	+.06-.06	+.06-.06	+.06-.06
1 INCH TO 6 INCHES	+.50-.00	+.06-.00	+.25-.25	+.28-.25	+.25-.25
6 INCHES TO 6 FEET	+1.00-.00		+.50-.50	+.50-.50	+.50-.50
OVER 6 FEET	+2.00-.00				

MANNED SPACECRAFT CENTER HOUSTON, TEXAS	SIZE A	1900974	
SCALE - NONE	REV LTR F		SHEET 4 OF 18

PENNANT LIST OF MATERIALS

NOTE	ITEM	QTY	PART NO	DESCRIPTION
16	1	1	MS3126F-20-41SW (1897044-411)	CONNECTOR PLUG
23	2	1	1010621- 2	CONNECTOR PLUG
	3	1	1900974-001	WIRE ND1002181 TYPE 2, CLASS 4, T2, 22AWG WHITE (CONDUCTORS MARKED R AND L RESPECTIVELY, 152 FT. TOTAL LENGTH.
	4	1	1900974-002	WIRE ND1002181 TYPE 1, CLASS 1, 22AWG 30 FT., TOTAL LENGTH.
	5	1	1900974-003	WIRE ND1002181 TYPE 1, CLASS 1, 20AWG, 88 FT. TOTAL LENGTH.
10	6	34	1010490-200	INSULATION-SLEEVING, ELEC
10	7	16	1000243-011	FERRULE-ELEC COND
10	8	16	1000242-009	FERRULE-ELEC COND
10	9	34	1016006-001	SPLICE REDUCER
10	10	1	1016128-011	BAND-IDENTIFICATION
10	11	32	1010490-198	INSULATION-SLEEVING ELEC
	12	1	1900974-004	ZIPPER TUBING ND1002155, TYPE 1, PLASTIC, FLEXIBLE 1.00 IN. DIA. 38 FT. TOTAL LENGTH
10	13	2	1016128-041	BAND IDENTIFICATION
	14	AR	MIL-T-713	LACING TAPE, TYPE P, CLASS 2, BLACK (FS-2732 NO. 18)
10	15	38	1010464- 1	CONTACTS, PINS

MANNED SPACECRAFT CENTER HOUSTON, TEXAS	SIZE A	1900974	
SCALE-NONE	REV LTR G		SHEET 5 OF 18

PENNANT LIST OF MATERIALS

NOTE	ITEM	QTY	PART NO	DESCRIPTION
20	16			CONTACT SOCKETS
21	17	AR	1897147-106, 108 AND 112,	CABLE CLAMP SLEEVE
	18			DELETED DELETED DELETED
	19		1900974-006	WIRE MD1002181 TYPE 2, CLASS 4, 20AWG WHITE (CONDUCTORS MARKED R AND L RESPECTIVELY) 456 FEET TOTAL LENGTH

MANNED SPACECRAFT CENTER HOUSTON, TEXAS	SIZE A	1900974	
SCALE - NONE	REV LTR F		SHEET 6 OF 18

GIB — CABLE W18 — F — 1900974

CONDUCTOR NUMBER	ITEM NO.	3	FROM: CUT WIRE OR SHIELD / STRIP WIRE OR JACKET / CIRCUIT POINT	1	2	TERMINATION SPEC 1	ITEM NO.	NO.	TO: CUT WIRE OR SHIELD / STRIP WIRE OR JACKET / CIRCUIT POINT	1	2	TERMINATION SPEC 1	ITEM NO.	NO.
A 1	3			230	200	7	8	5		230	200	A 11	7A	
							A 11							
A 1A	4		SHLD A1	25N					E1	25N				
A 1L			P1-C*	19N		16			P2-20	10N		15		
A 1R			P1-B*	19N		16			P2-14	10N		15		
A 2			DELETED											
A 3			DELETED											
A 4			DELETED											
A 5			DELETED											
			DELETED											
A 5A			DELETED											
A 5L			DELETED											
A 5R			DELETED											
A 6	3			230	200	7	8	5		230	200	A 11	7A	
							A 11							
A 6A	4		SHLD A6	25N					E1	25N				
A 6L			P1-H*	19N		16			P2-21	10N		15		
A 6R			P1-G*	19N		16			P2-15	10N		15		

1> THE STD CONDUCTOR TERMINATION FIGURES ARE PER
2> DIMENSIONS ARE IN INCHES AND TWO PLACE DECIMALS.

MANNED SPACECRAFT CENTER HOUSTON, TEXAS | SIZE A | 1900974 | SCALE - NONE | REV LTR F | SHEET 7 OF 18

GIB — CABLE W18 — F — 1900974

CONDUCTOR NUMBER	ITEM NO.	3	FROM: CUT WIRE OR SHIELD / STRIP WIRE OR JACKET / CIRCUIT POINT	1	2	TERMINATION SPEC 1	ITEM NO.	NO.	TO: CUT WIRE OR SHIELD / STRIP WIRE OR JACKET / CIRCUIT POINT	1	2	TERMINATION SPEC 1	ITEM NO.	NO.
A 7	3			230	200	7	8	5		230	200	A 11	7A	
							A 11							
A 7A	4		SHLD A7	25N					E1	25N				
A 7L			P1-P*	19N		16			P2- 5	10N		15		
A 7R			P1-N*	19N		16			P2- 6	10N		15		
A 8			DELETED											
A 9			DELETED											
			DELETED											
A 9A			DELETED											
A 9L			DELETED											
A 9R			DELETED											
A 10			DELETED											
A 11			DELETED											
			DELETED											
A 11A			DELETED											
A 11L			DELETED											
A 11R			DELETED											
A 12			DELETED											

1> THE STD CONDUCTOR TERMINATION FIGURES ARE PER
2> DIMENSIONS ARE IN INCHES AND TWO PLACE DECIMALS.

MANNED SPACECRAFT CENTER HOUSTON, TEXAS | SIZE A | 1900974 | SCALE - NONE | REV LTR F | SHEET 8 OF 18

GIB — CABLE W18 — F — 1900974

CONDUCTOR NUMBER	ITEM NO.	3	FROM: CUT WIRE OR SHIELD / STRIP WIRE OR JACKET / CIRCUIT POINT	1	2	TERMINATION SPEC 1	ITEM NO.	NO.	TO: CUT WIRE OR SHIELD / STRIP WIRE OR JACKET / CIRCUIT POINT	1	2	TERMINATION SPEC 1	ITEM NO.	NO.
A 13			DELETED											
A 14			DELETED											
A 15			DELETED											
A 16			DELETED											
A 17	3			280	250	7	8	5		280	250	A 11	7A	
							A 11							
A 17A	4		SHLD A17	25N					E1	25N				
A 17L			P1-A*	19N		16			P2- 7	10N		15		
A 17R			P1-Z	19N		16			P2-13	10N		15		
A 18			DELETED											
A 19			DELETED											
A 20			DELETED											
A 21			DELETED											
A 22			DELETED											
A 22A			DELETED											
A 22L			DELETED											
A 22R			DELETED											
A 23			DELETED											

1> THE STD CONDUCTOR TERMINATION FIGURES ARE PER
2> DIMENSIONS ARE IN INCHES AND TWO PLACE DECIMALS.

MANNED SPACECRAFT CENTER HOUSTON, TEXAS | SIZE A | 1900974 | SCALE - NONE | REV LTR F | SHEET 9 OF 18

GIB — CABLE W18 — F — 1900974

CONDUCTOR NUMBER	ITEM NO.	3	FROM: CUT WIRE OR SHIELD / STRIP WIRE OR JACKET / CIRCUIT POINT	1	2	TERMINATION SPEC 1	ITEM NO.	NO.	TO: CUT WIRE OR SHIELD / STRIP WIRE OR JACKET / CIRCUIT POINT	1	2	TERMINATION SPEC 1	ITEM NO.	NO.
A 23A			DELETED											
A 23L			DELETED											
A 23R			DELETED											
A 24			DELETED											
A 24A			DELETED											
A 24L			DELETED											
A 24R			DELETED											
A 25			DELETED											
A 25A			DELETED											
A 25L			DELETED											
A 25R			DELETED											
A 26	4		P1-J*	19N		16			E1	25N				
A 27			DELETED											
A 28	4		P2-19	10N		15			P2-26	10N		15		
A 29			DELETED											
A 30	5		P1-T	19N		16			E3	25N				
A 31	4		E3	25N					P2-17	10N		15		
A 32			DELETED											

1> THE STD CONDUCTOR TERMINATION FIGURES ARE PER
2> DIMENSIONS ARE IN INCHES AND TWO PLACE DECIMALS.

MANNED SPACECRAFT CENTER HOUSTON, TEXAS | SIZE A | 1900974 | SCALE - NONE | REV LTR F | SHEET 10 OF 18

G18 CABLE W18 F 1900974

CONDUCTOR NUMBER	INDIVIDUAL LENGTH ITEM NO. 3	FROM CUT WIRE OR SHIELD STRIP WIRE OR JACKET CIRCUIT POINT 2	1 3	TERMINATION SPEC 1	NO.	TO CUT WIRE OR SHIELD STRIP WIRE OR JACKET CIRCUIT POINT 2	1 3	TERMINATION SPEC 1	NO.
A 33		DELETED							
A 34	4	P2-33	10N	15		P2-36	10N	15	
A 35	5	P1-R*	19N	16		E4	25N		
A 36		DELETED							
A 36L		DELETED							
A 36R		DELETED							
A 36Y		DELETED							
A 37	4	E5	25N			P2-32	10N	15	
A 38	5	P1-Q*	19N	16		E6	25N		
A 39		DELETED							
A 39L		DELETED							
A 39R		DELETED							
A 39Y		DELETED							
A 40	4	E7	25N			P2-24	10N	15	
A 41	5	P1-S*	19N	16		E8	25N		
A 42		DELETED							
A 42L		DELETED							
A 42R		DELETED							

1 THE STD CONDUCTOR TERMINATION FIGURES ARE PER
2 DIMENSIONS ARE IN INCHES AND TWO PLACE DECIMALS.

MANNED SPACECRAFT CENTER HOUSTON, TEXAS | SIZE A | 1900974
SCALE - NONE | REV LTR F | SHEET 11 OF 18

G18 CABLE W18 F 1900974

CONDUCTOR NUMBER	INDIVIDUAL LENGTH ITEM NO. 3	FROM CUT WIRE OR SHIELD STRIP WIRE OR JACKET CIRCUIT POINT 2	1 3	TERMINATION SPEC 1	NO.	TO CUT WIRE OR SHIELD STRIP WIRE OR JACKET CIRCUIT POINT 2	1 3	TERMINATION SPEC 1	NO.
A 42Y		DELETED							
A 43	4	E9	25N			P2-31	10N	15	
A 44	5	P1-A	19N	16		E10	25N		
A 45		DELETED							
A 45L		DELETED							
A 45R		DELETED							
A 45Y		DELETED							
A 46	4	E11	25N			P2-23	10N	15	
A 47	5	P1-T*	19N	16		E12	25N		
A 48		DELETED							
A 48L		DELETED							
A 48R		DELETED							
A 48Y		DELETED							
A 49	4	E13	25N			P2-35	10N	15	
A 50	5	P1-F*	19N	16		E14	25N		
A 51		DELETED							
A 51L		DELETED							
A 51R		DELETED							

1 THE STD CONDUCTOR TERMINATION FIGURES ARE PER
2 DIMENSIONS ARE IN INCHES AND TWO PLACE DECIMALS.

MANNED SPACECRAFT CENTER HOUSTON TEXAS | SIZE A | 1900974
SCALE - NONE | REV LTR F | SHEET 12 OF 18

G1B CABLE W18 G 1900974

CONDUCTOR INDIVIDUAL LENGTH NUMBER	ITEM NO.	FROM CUT WIRE OR SHIELD STRIP WIRE OR JACKET CIRCUIT POINT			TERMINATION SPEC	ITEM NO.	NO.	TO CUT WIRE OR SHIELD STRIP WIRE OR JACKET CIRCUIT POINT			TERMINATION SPEC	ITEM NO.	NO.
A 51Y		DELETED											
A 52	4	E15*	25N					P2-36	10N		15		
A 53	5	P1-E*	19N		16			E16	25N				
A 54		DELETED											
A 54L		DELETED											
A 54R		DELETED											
A 54Y		DELETED											
A 55	4	E17	25N					P2-28	10N		15		
A 56	5	P1-B*	19N		16			E18	25N				
A 57		DELETED											
A 57L		DELETED											
A 57R		DELETED											
A 57Y		DELETED											
A 58	4	E19	25N					P2-27	10N		15		
A 59	4	E3	25N					P2-18	10N		15		
A 60	4	E3	25N					E23	25N				
A 61	4	P2- 9	10N		15			P2-10	10N		15		
A 62	19		330	300	A 11	7A			330	300	7 8	5	

1 > THE STD CONDUCTOR TERMINATION FIGURES ARE PER
2 > DIMENSIONS ARE IN INCHES AND TWO PLACE DECIMALS.

MANNED SPACECRAFT CENTER HOUSTON, TEXAS | SIZE A | 1900974
SCALE - NONE | REV LTR G | SHEET 13 OF 18

G1B CABLE W18 F 1900974

CONDUCTOR INDIVIDUAL LENGTH NUMBER	ITEM NO.	FROM CUT WIRE OR SHIELD STRIP WIRE OR JACKET CIRCUIT POINT			TERMINATION SPEC	ITEM NO.	NO.	TO CUT WIRE OR SHIELD STRIP WIRE OR JACKET CIRCUIT POINT			TERMINATION SPEC	ITEM NO.	NO.
												A 11	
A 62B	4	SHLD A62	25					E20	25				
A 62L		E4	25					E5	25				
A 62R		E6	25					E7	25				
A 63	19		330	300	A 11	7A			330	300	7 8	5	
												A 11	
A 63B	4	SHLD A63	25					E20	25				
A 63L		E4	25					E5	25				
A 63R		E6	25					E7	25				
A 64	19		330	300	A 11	7A			330	300	7 8	5	
												A 11	
A 64B	4	SHLD A64	25					E20	25				
A 64L		E4	25					E5	25				
A 64R		E6	25					E7	25				
A 65	19		330	300	A 11	7A			330	300	7 8	5	
												A 11	
A 65B	4	SHLD A65	25					E20					
A 65L		E8	25N					E9	25N				

1 > THE STD CONDUCTOR TERMINATION FIGURES ARE PER
2 > DIMENSIONS ARE IN INCHES AND TWO PLACE DECIMALS.

MANNED SPACECRAFT CENTER HOUSTON, TEXAS | SIZE A | 1900974
SCALE - NONE | REV LTR F | SHEET 14 OF 18

G1B CABLE W18 F 1900974

CONDUCTOR INDIVIDUAL LENGTH NUMBER	ITEM NO.	FROM CUT WIRE OR SHIELD STRIP WIRE OR JACKET CIRCUIT POINT			TERMINATION SPEC	ITEM NO.	NO.	TO CUT WIRE OR SHIELD STRIP WIRE OR JACKET CIRCUIT POINT			TERMINATION SPEC	ITEM NO.	NO.
A 65R		E10	25N					E11	25N				
A 66	19		380	350	A 11	7A			380	350	7 8	5	
												A 11	
A 66B	4	SHLD A66	25N					E21	25N				
A 66L		E8	25N					E9	25N				
A 66R		E10	25N					E11	25N				
A 67	19		380	350	A 11	7A			380	350	7 8	5	
												A 11	
A 67B	4	SHLD A67	25N					E21	25N				
A 67L		E8	25N					E9	25N				
A 67R		E10	25N					E11	25N				
A 68	19		380	350	A 11	7A			380	350	7 8	5	
												A 11	
A 68B	4	SHLD A68	25N					E21	25N				
A 68L		E14	25N					E15	25N				
A 68R		E16	25N					E17	25N				
A 69	19		430	400	A 11	7A			430	400	7 8	5	
												A 11	

1 > THE STD CONDUCTOR TERMINATION FIGURES ARE PER
2 > DIMENSIONS ARE IN INCHES AND TWO PLACE DECIMALS.

MANNED SPACECRAFT CENTER HOUSTON, TEXAS | SIZE A | 1900974
SCALE - NONE | REV LTR F | SHEET 15 OF 18

G1B CABLE W18 F 1900974

CONDUCTOR INDIVIDUAL LENGTH NUMBER	ITEM NO.	FROM CUT WIRE OR SHIELD STRIP WIRE OR JACKET CIRCUIT POINT			TERMINATION SPEC	ITEM NO.	NO.	TO CUT WIRE OR SHIELD STRIP WIRE OR JACKET CIRCUIT POINT			TERMINATION SPEC	ITEM NO.	NO.
A 69B	4	SHLD A69	25N					E21	25N				
A 69L		E14	25N					E15	25N				
A 69R		E16	25N					E17	25N				
A 70	19		430	400	A 11	7A			430	400	7 8	5	
												A 11	
A 70B	4	SHLD A70	25N					E22	25N				
A 70L		E14	25N					E15	25N				
A 70R		E16	25N					E17	25N				
A 71	19		430	400	A 11	7A			430	400	7 8	5	
												A 11	
A 71B	4	SHLD A71						E22					
A 71L		E12						E13					
A 71R		E18						E19					
A 72	19		480	450	A 11	7A			430	400	7 8	5	
												A 11	
A 72B	4	SHLD A72	25N					E22					
A 72L		E12						E13					
A 72R		E18	25N					E19					

1 > THE STD CONDUCTOR TERMINATION FIGURES ARE PER
2 > DIMENSIONS ARE IN INCHES AND TWO PLACE DECIMALS.

MANNED SPACECRAFT CENTER HOUSTON TEXAS | SIZE A | 1900974
SCALE NONE | REV LTR F | SHEET 16 OF 18

G18 CABLE W18 F 1900974

CONDUCTOR NUMBER	INDIVIDUAL LENGTH	ITEM NO.	FROM CUT WIRE OR SHIELD STRIP WIRE OR JACKET CIRCUIT POINT	1	2	3	4	TERMINATION SPEC	1	NO.	ITEM NO	TO CUT WIRE OR SHIELD STRIP WIRE OR JACKET CIRCUIT POINT	1	2	3	4	TERMINATION SPEC	1	NO.	ITEM NO
A 73	19			480	450	A 11	7A						480	450	7	8	5			A 11
A 73B	4		SHLD A73	25N								E22	25N							
A 73L			E12	25N								E13	25N							
A 73R			E18	25N								E19	25N							
A 74	5		P1-V	19N								E23	25N							
A 75	4		E20	25N								E21	25N							
A 76	4		E21	25N								E22	25N							
A 77	4		E22	25N								E23	25N							
A 78	4		E23	25N								P2-25	10N							

(1) > THE STD CONDUCTOR TERMINATION FIGURES ARE PER

(2) > DIMENSIONS ARE IN INCHES AND TWO PLACE DECIMALS.

MANNED SPACECRAFT CENTER HOUSTON, TEXAS | SIZE A | 1900974

SCALE - NONE | REV LTR F | SHEET 17 OF 18

REVISIONS					
SYM	ZONE	DESCRIPTION	CHG NO	DATE	APPD.

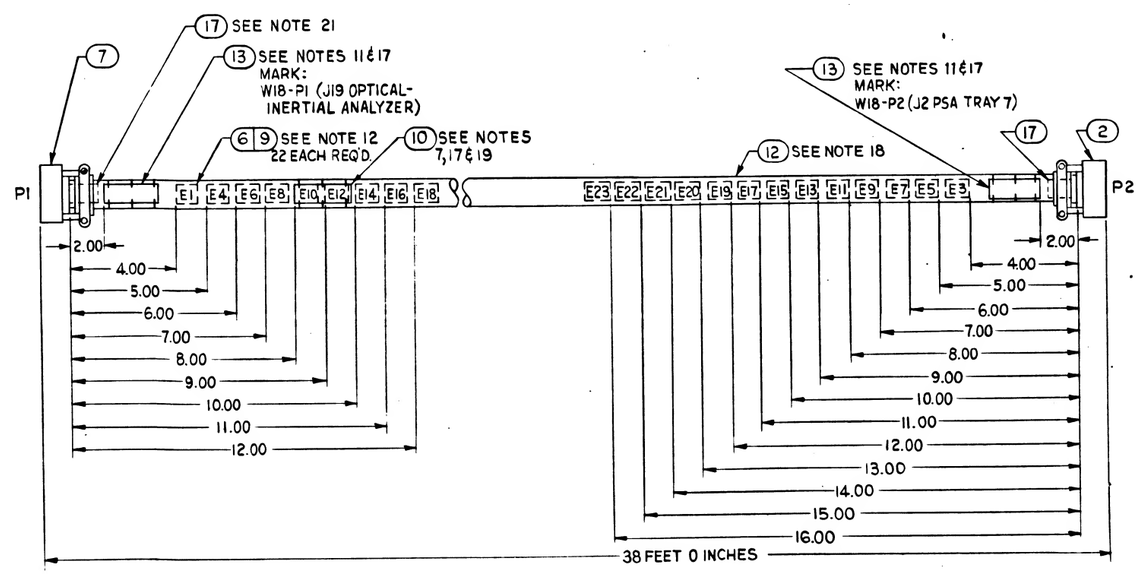

LOCATION TOLERANCE
(EXCEPT LENGTH):
+.50
-.50

NEXT ASSY	USED ON
APPLICATION	

UNLESS OTHERWISE SPECIFIED
DIMENSIONS ARE IN INCHES
TOLERANCES ON

FRACTIONS	DECIMALS	ANGLES
+ —	+ —	+ —
— —	— —	— —

DO NOT SCALE THIS DRAWING

MATERIAL

CONTRACT NAS 9-497

AC SPARK PLUG DIVISION, GMC
MILWAUKEE, WISCONSIN

ACSP PN

DRAWN T. KOSMATKA DATE 1 NOV 63
CHECKED E. HINTZ 12 NOV 63
APPROVAL R. B. LIGON 13 NOV 63
APPROVAL L. GEDIMAN 3 JAN 64

NASA APPROVAL J. BARNARD
MIT APPROVAL W. KUPFER

MANNED
SPACECRAFT CENTER
HOUSTON, TEXAS

CABLE INTERCONNECT W18
1SS, OSS, & G&N TESTING

CODE IDENT NO

SIZE D

1900974

SCALE NONE

SHEET 18 OF 18

MIL 1077

APPLICATION		REVISIONS			
NEXT ASSY	USED ON	SYM	DESCRIPTION	DATE	APPROVAL
1901308	1900005-011	A	CHANGE IN ACCORDANCE WITH CM 193385 TDRR 09707	6 FEB 64	J J J W.A.
		B	CHANGE IN ACCORDANCE WITH CM 195507 TDRR 09708	12 MAR 64	RJF W.A.
		C	CHANGE IN ACCORDANCE WITH CM 195890 TDRR 09708	2 APR 64	JWP MEM
		D	CHANGE IN ACCORDANCE WITH CM 196039 TDRR 09708	27 APR 64	HC PZ
		(r) E	CHANGE IN ACCORDANCE WITH CM 196920 REVISED PER TDRR 09709	21 MAY 64	J J J PZ
		(m) F	CHANGE IN ACCORDANCE WITH CM 198677 TDRR 12359	27 JUL 64	J J J MEM
		(m) G	CHANGE IN ACCORDANCE WITH CM 198928 REVISED PER TDRR 12351	30 JUL 64	J J J DRF
		H	CHANGE IN ACCORDANCE WITH CM 302656 REVISED PER TDRR 14409	19 SEP 64	JWP JAS

V2-64

FOR INFORMATION ONLY

CLASS B RELEASE TDR No. 05663 DATE 1/7/64

REV																								
SHEET																								
REV STATUS	REV	H	F	F	F	H	F	F	F	F	F	F	F	G	F	F	F	F	F					
OF SHEETS	SHEET	1	2	3	4	5	6	7	8	9	10	11	12	13	14	15	16	17	18					

AC SPARK PLUG DIVISION, GMC
MILWAUKEE, WISCONSIN

ACSP PN

DRAWN J Tomasko DATE 6 NOV 63
CHECKED 12 NOV 63
APPROVAL R Engo 13 NOV 63
APPROVAL L Gelman 1/3/64

MANNED
SPACECRAFT CENTER
HOUSTON, TEXAS

CABLE INTERCONNECT W18
1SS, OSS & G & N TESTING

NASA APPROVAL
MIT APPROVAL

CODE IDENT NO.	SIZE		REV
	A	1900974	H

CONTRACT NAS 9-497

SCALE NONE

SHEET 1 OF 18

PENNANT NOTE — GENERAL NOTES

1 SEE CONDUCTOR CHART. PENNANT NOTE 1.

2 SEE CONDUCTOR CHART. PENNANT NOTE 2.

3 INTERPRET DRAWING IN ACCORDANCE WITH STANDARDS PRESCRIBED BY MIL-D-70327.

4 MARK CONDUCTOR IDENTIFICATION ON SINGLE CONDUCTORS PER ND1002019 OMITTING ALL SUFFIX LETTERS EXCEPT A AND B.

5 SPACING OF CONDUCTOR IDENTIFICATION SHALL BE EVERY 15 INCHES MAX. AND AT EACH TERMINATION.

6 SPIRALLING OF THE MARKING IS ALLOWED.

7 IDENTIFY USING DRAWING NO. AND REVISION LETTER PER MIL-STD-130 (ES-267). .12 INCH HIGH CHARACTERS WHITE.

8 Y OR N IN TINNED COLUMN INDICATES YES OR NO.

9 A LETTER WITH AN ASTERISK SUFFIX, INDICATES A LOWER CASE LETTER.

10 VENDOR ITEM - SEE SPECIFICATION CONTROL DRAWING.

11 MARK IDENTIFICATION BAND WITH REFERENCE DESIGNATION AS NOTED .12 INCH HIGH COLOR WHITE. HOT IMPRESSION STAMPING PER ND1002019. CENTRALIZE.

12 MARK SLEEVING WITH REFERENCE DESIGNATIONS AS SHOWN .12 INCH HIGH, COLOR BLACK PER ND1002019.

13 MARK SLEEVING OF MULTI-CONDUCTORS WITH THE CONDUCTOR NUMBER .12 INCH HIGH, COLOR BLACK, PER ND1002019 WHEN SLEEVING ITEM NUMBERS FOLLOW AN A OR T IN THE ACCESSORIES ITEM NUMBER FIELD.

PENNANT NOTE — GENERAL NOTES

14 A OR T PREFIX IN THE ACCESSORIES ITEM NUMBER COLUMN INDICATES THE READING POSITION AWAY FROM TERMINATION OR TOWARD TERMINATION RESPECTIVELY, OF THE WIRE MARKER SLEEVE.

15 THE SUFFIX LETTER OF A CONDUCTOR IDENTIFICATION NUMBER INDICATES CONDUCTOR SHIELDING, COLOR, OR MARKING.
A - FROM END SHIELD
L - WHITE WITH BLUE TRACER OR LETTER L
R - WHITE WITH RED TRACER OR LETTER R

16 ASSEMBLE CONTACTS IN ALL CONNECTOR GROMMET HOLES.

17 SECURE TO CABLE USING ITEM 14. MARKING TO READ AWAY FROM CONNECTOR.

18 SEAL ZIPPER TUBING PER ND1002153

19 SERIALIZE PER ND1002023

20 ITEM 16 FURNISHED WITH ITEM 1.

21 ITEM 17 SHALL BE SHORTENED WHEN NECESSARY TO AVOID INTERFERENCE WITH FERRULES AND MAY BE CUT LENGTHWISE ON ONE SIDE. SELECT ONE OR MORE OF ITEM 17 AS REQUIRED TO FIT.

22 THE FOLLOWING MULTICONDUCTORS ARE TO BE TWISTED TOGETHER WITH THE BEST COMMERCIAL PRACTICE. THEY SHALL BE TWISTED WITH A LAY NOT GREATER THAN 14 TIMES NOR LESS THAN 8 TIMES THE PITCH DIAMETER. AS TWISTED PAIRS, CONDUCTORS (A36 AND A39), (A42 AND A45), (A51 AND A54) AND (A48 AND A57)

23 SEE NOTES 10 AND 16

PENNANT NOTE — GENERAL NOTES

TOLERANCE CHART, UNLESS OTHERWISE SPECIFIED ---

APPLICABLE LENGTH FOR WIRE OR CABLE, STRIP WIRE, STRIP JACKET, CUT WIRE OR CUT SHIELD.	TOLERANCE: WIRE OR CABLE	STRIP WIRE	STRIP JACKET	CUT WIRE	CUT SHIELD
UNDER 1 INCH	+ .06-.00	+.03-.00	+.06-.06	+.06-.06	+.06-.06
1 INCH TO 6 INCHES	+ .50-.00	+.06-.00	+.25-.25	+.25-.25	+.25-.25
6 INCHES TO 6 FEET	+1.00-.00		+.50-.50	+.50-.50	+.50-.50
OVER 6 FEET	+2.00-.00				

PENNANT NOTE — LIST OF MATERIALS

NOTE	ITEM	QTY	PART NO	DESCRIPTION
16	1	1	MS3126F-20-41SW (1897044-411)	CONNECTOR PLUG
23	2	1	1901360- 2 ~~1010631- 3~~	CONNECTOR PLUG
	3	1	1900974-001	WIRE ND1002181 TYPE 2, CLASS 4, T2, 22AWG WHITE (CONDUCTORS MARKED R AND L RESPECTIVELY, 152 FT. TOTAL LENGTH.
	4	1	1900974-002	WIRE ND1002181 TYPE 1, CLASS 1, 22AWG 30 FT., TOTAL LENGTH.
	5	1	1900974-003	WIRE ND1002181 TYPE 1, CLASS 1, 20AWG, 88 FT. TOTAL LENGTH.
10	6	34	1010490-200	INSULATION-SLEEVING, ELEC
10	7	16	1000243-011	FERRULE-ELEC COND
10	8	16	1000242-009	FERRULE-ELEC COND
10	9	34	1016006-001	SPLICE REDUCER
10	10	1	1016128-011	BAND-IDENTIFICATION
10	11	32	1010490-198	INSULATION-SLEEVING ELEC
	12	1	1900974-004	ZIPPER TUBING ND1002155, TYPE 1, PLASTIC, FLEXIBLE 1.00 IN. DIA. 38 FT. TOTAL LENGTH
10	13	2	1016128-041	BAND IDENTIFICATION
	14	AR	MIL-T-713	LACING TAPE, TYPE P, CLASS 2, BLACK (ES-2732 NO. 18)
10	15	38	1010464- 1	CONTACTS, PINS

PENNANT LIST OF MATERIALS

NOTE	ITEM	QTY	PART NO	DESCRIPTION
20	16			CONTACT SOCKETS
21	17	AR	1897147-106,	108 AND 112, CABLE CLAMP SLEEVE
	18			DELETED DELETED DELETED
	19		1900974-006	WIRE ND1002181 TYPE 2, CLASS 4, 20AWG WHITE (CONDUCTORS MARKED R AND L RESPECTIVELY) 456 FEET TOTAL LENGTH

MANNED SPACECRAFT CENTER HOUSTON, TEXAS | SIZE A | 1900974
SCALE - NONE | REV LTR F | SHEET 6 OF 18

MIL-P-24643

CONDUCTOR INDIVIDUAL LENGTH NUMBER	ITEM NO. (2)	FROM CUT WIRE OR SHIELD STRIP WIRE OR JACKET CIRCUIT POINT (2)	TIN (2)	TERMINATION SPEC. (1) ITEM NO.	NO.	TO CUT WIRE OR SHIELD STRIP WIRE OR JACKET CIRCUIT POINT (2)	TIN (2)	TERMINATION SPEC (1) ITEM NO.	NO.
A 1	3		230	200	7 8 A 11	5	230	200	A 11 7A
A 1A	4	SHLD A1	25N				E1	25N	
A 1L		P1-C*	19N		16		P2-20	10N	15
A 1R		P1-B*	19N		16		P2-14	10N	15
A 2		DELETED							
A 3		DELETED							
A 4		DELETED							
A 5		DELETED							
		DELETED							
A 5A		DELETED							
A 5L		DELETED							
A 5R		DELETED							
A 6	3		230	200	7 8 A 11	5	230	200	A 11 7A
A 6A	4	SHLD A6	25N				E1	25N	
A 6L		P1-H*	19N		16		P2-21	10N	15
A 6R		P1-G*	19N		16		P2-15	10N	15

(1) THE STD CONDUCTOR TERMINATION FIGURES ARE PER
(2) DIMENSIONS ARE IN INCHES AND TWO PLACE DECIMALS.

MANNED SPACECRAFT CENTER HOUSTON, TEXAS | SIZE A | 1900974
SCALE - NONE | REV LTR F | SHEET 7 OF 18

MIL-P-24643

CONDUCTOR INDIVIDUAL LENGTH NUMBER	ITEM NO. (2)	FROM CUT WIRE OR SHIELD STRIP WIRE OR JACKET CIRCUIT POINT (2)	TIN (2)	TERMINATION SPEC. (1) ITEM NO.	NO.	TO CUT WIRE OR SHIELD STRIP WIRE OR JACKET CIRCUIT POINT (2)	TIN (2)	TERMINATION SPEC (1) ITEM NO.	NO.
A 7	3		230	200	7 8 A 11	5	230	200	A 11 7A
A 7A	4	SHLD A7	25N				E1	25N	
A 7L		P1-P*	19N		16		P2- 5	10N	15
A 7R		P1-N*	19N		16		P2- 6	10N	15
A 8		DELETED							
A 9		DELETED							
		DELETED							
A 9A		DELETED							
A 9L		DELETED							
A 9R		DELETED							
A 10		DELETED							
A 11		DELETED							
		DELETED							
A 11A		DELETED							
A 11L		DELETED							
A 11R		DELETED							
A 12		DELETED							

(1) THE STD CONDUCTOR TERMINATION FIGURES ARE PER
(2) DIMENSIONS ARE IN INCHES AND TWO PLACE DECIMALS.

MANNED SPACECRAFT CENTER HOUSTON, TEXAS | SIZE A | 1900974
SCALE - NONE | REV LTR F | SHEET 8 OF 18

MIL-P-24643

CONDUCTOR INDIVIDUAL LENGTH NUMBER	ITEM NO. (2)	FROM CUT WIRE OR SHIELD STRIP WIRE OR JACKET CIRCUIT POINT (2)	TIN (2)	TERMINATION SPEC. (1) ITEM NO.	NO.	TO CUT WIRE OR SHIELD STRIP WIRE OR JACKET CIRCUIT POINT (2)	TIN (2)	TERMINATION SPEC (1) ITEM NO.	NO.
A 13		DELETED							
A 14		DELETED							
A 15		DELETED							
A 16		DELETED							
A 17	3		280	250	7 8 A 11	5	280	250	A 11 7A
A 17A	4	SHLD A17	25N				E1	25N	
A 17L		P1-A*	19N		16		P2- 7	10N	15
A 17R		P1-Z	19N		16		P2-13	10N	15
A 18		DELETED							
A 19		DELETED							
A 20		DELETED							
A 21		DELETED							
A 22		DELETED							
A 22A		DELETED							
A 22L		DELETED							
A 22R		DELETED							
A 23		DELETED							

(1) THE STD CONDUCTOR TERMINATION FIGURES ARE PER
(2) DIMENSIONS ARE IN INCHES AND TWO PLACE DECIMALS.

MANNED SPACECRAFT CENTER HOUSTON, TEXAS | SIZE A | 1900974
SCALE - NONE | REV LTR F | SHEET 9 OF 18

MIL-P-24643

GIB CABLE W18 F 1900974

CONDUCTOR INDIVIDUAL LENGTH NUMBER	ITEM NO.	2	FROM CUT WIRE OR SHIELD STRIP WIRE OR JACKET CIRCUIT POINT 2	TIN 2	TERMINATION SPEC. 1 ITEM NO.	NO.	TO CUT WIRE OR SHIELD STRIP WIRE OR JACKET CIRCUIT POINT 2	TIN 2	TERMINATION SPEC 1 ITEM NO.	NO.
A 23A			DELETED							
A 23L			DELETED							
A 23R			DELETED							
A 24			DELETED							
A 24A			DELETED							
A 24L			DELETED							
A 24R			DELETED							
A 25			DELETED							
A 25A			DELETED							
A 25L			DELETED							
A 25R			DELETED							
A 26	4		P1-J*	19N	16		E1	25N		
A 27			DELETED							
A 28	4		P2-19	10N	15		P2-26	10N	15	
A 29			DELETED							
A 30	5		P1-T	19N	16		E3	25N		
A 31	4		E3	25N			P2-17	10N	15	
A 32			DELETED							

1 THE STD CONDUCTOR TERMINATION FIGURES ARE PER
2 DIMENSIONS ARE IN INCHES AND TWO PLACE DECIMALS.

MANNED SPACECRAFT CENTER HOUSTON, TEXAS | SIZE A | 1900974
SCALE-NONE | REV LTR F | SHEET 10 OF 18

MIL 2089 - 4-63 WIR

GIB CABLE W18 F 1900974

CONDUCTOR INDIVIDUAL LENGTH NUMBER	ITEM NO.	2	FROM CUT WIRE OR SHIELD STRIP WIRE OR JACKET CIRCUIT POINT 2	TIN 2	TERMINATION SPEC. 1 ITEM NO.	NO.	TO CUT WIRE OR SHIELD STRIP WIRE OR JACKET CIRCUIT POINT 2	TIN 2	TERMINATION SPEC 1 ITEM NO.	NO.
A 33			DELETED							
A 34	4		P2-33	10N	15		P2-34	10N	15	
A 35	5		P1-R*	19N	16		E4	25N		
A 36			DELETED							
A 36L			DELETED							
A 36R			DELETED							
A 36Y			DELETED							
A 37	4		E5	25N			P2-32	10N	15	
A 38	5		P1-Q*	19N	16		E6	25N		
A 39			DELETED							
A 39L			DELETED							
A 39R			DELETED							
A 39Y			DELETED							
A 40	4		E7	25N			P2-24	10N	15	
A 41	5		P1-S*	19N	16		E8	25N		
A 42			DELETED							
A 42L			DELETED							
A 42R			DELETED							

1 THE STD CONDUCTOR TERMINATION FIGURES ARE PER
2 DIMENSIONS ARE IN INCHES AND TWO PLACE DECIMALS.

MANNED SPACECRAFT CENTER HOUSTON, TEXAS | SIZE A | 1900974
SCALE-NONE | REV LTR F | SHEET 11 OF 18

MIL 2089 - 4-63 WIR

GIB CABLE W18 F 1900974

CONDUCTOR INDIVIDUAL LENGTH NUMBER	ITEM NO.	2	FROM CUT WIRE OR SHIELD STRIP WIRE OR JACKET CIRCUIT POINT 2	TIN 2	TERMINATION SPEC. 1 ITEM NO.	NO.	TO CUT WIRE OR SHIELD STRIP WIRE OR JACKET CIRCUIT POINT 2	TIN 2	TERMINATION SPEC 1 ITEM NO.	NO.
A 42Y			DELETED							
A 43	4		E9	25N			P2-31	10N	15	
A 44	5		P1-A	19N	16		E10	25N		
A 45			DELETED							
A 45L			DELETED							
A 45R			DELETED							
A 45Y			DELETED							
A 46	4		E11	25N			P2-23	10N	15	
A 47	5		P1-T*	19N	16		E12	25N		
A 48			DELETED							
A 48L			DELETED							
A 48R			DELETED							
A 48Y			DELETED							
A 49	4		E13	25N			P2-35	10N	15	
A 50	5		P1-F*	19N	16		E14	25N		
A 51			DELETED							
A 51L			DELETED							
A 51R			DELETED							

1 THE STD CONDUCTOR TERMINATION FIGURES ARE PER
2 DIMENSIONS ARE IN INCHES AND TWO PLACE DECIMALS.

MANNED SPACECRAFT CENTER HOUSTON, TEXAS | SIZE A | 1900974
SCALE-NONE | REV LTR F | SHEET 12 OF 18

MIL 2089 - 4-63 WIR

GIB CABLE W18 G 1900974

CONDUCTOR INDIVIDUAL LENGTH NUMBER	ITEM NO.	2	FROM CUT WIRE OR SHIELD STRIP WIRE OR JACKET CIRCUIT POINT 2	TIN 2	TERMINATION SPEC. 1 ITEM NO.	NO.	TO CUT WIRE OR SHIELD STRIP WIRE OR JACKET CIRCUIT POINT 2	TIN 2	TERMINATION SPEC 1 ITEM NO.	NO.
A 51Y			DELETED							
A 52	4		E15	25N			P2-36	10N	15	
A 53	5		P1-E*	19N	16		E16	25N		
A 54			DELETED							
A 54L			DELETED							
A 54R			DELETED							
A 54Y			DELETED							
A 55	4		E17	25N			P2-28	10N	15	
A 56	5		P1-B	19N	16		E18	25N		
A 57			DELETED							
A 57L			DELETED							
A 57R			DELETED							
A 57Y			DELETED							
A 58	4		E19	25N			P2-27	10N	15	
A 59	4		E3	25N			P2-18	10N	15	
A 60	4		E3	25N			E23	25N		
A 61	4		P2- 9	10N	15		P2-10	10N	15	
A 62	19			330	300 A 11	7A		330	300 7 8	5

1 THE STD CONDUCTOR TERMINATION FIGURES ARE PER
2 DIMENSIONS ARE IN INCHES AND TWO PLACE DECIMALS.

MANNED SPACECRAFT CENTER HOUSTON, TEXAS | SIZE A | 1900974
SCALE-NONE | REV LTR G | SHEET 13 OF 18

MIL 2089 - 4-63 WIR

G18 CABLE W18 F 1900974

CONDUCTOR NUMBER	ITEM NO. (2)	INDIVIDUAL LENGTH	FROM CUT WIRE OR SHIELD STRIP WIRE OR JACKET	FROM CIRCUIT POINT (2)	FROM TIN (2)	FROM TERMINATION SPEC. (1)	FROM ITEM NO.	FROM NO.	TO CUT WIRE OR SHIELD STRIP WIRE OR JACKET	TO CIRCUIT POINT (2)	TO TIN (2)	TO TERMINATION SPEC. (1)	TO ITEM NO.	TO NO.
													A 11	
A 62B	4		SHLD A62	25					E20	25				
A 62L			E4	25					E5	25				
A 62R			E6	25					E7	25				
A 63	19			330	300	A 11	7A			330	300	7 8	5	
													A 11	
A 63B	4		SHLD A63	25					E20	25				
A 63L			E4	25					E5	25				
A 63R			E6	25					E7	25				
A 64	19			330	300	A 11	7A			330	300	7 8	5	
													A 11	
A 64B	4		SHLD A64	25					E20	25				
A 64L			E4	25					E5	25				
A 64R			E6	25					E7	25				
A 65	19			330	300	A 11	7A			330	300	7 8	5	
													A 11	
A 65B	4		SHLD A65	25					E20					
A 65L			E8	25N					E9	25N				

(1) THE STD CONDUCTOR TERMINATION FIGURES ARE PER
(2) DIMENSIONS ARE IN INCHES AND TWO PLACE DECIMALS.

MANNED SPACECRAFT CENTER HOUSTON, TEXAS | SIZE A | 1900974
SCALE-NONE | REV LTR F | SHEET 14 OF 18

MIL 2089 - 4-63 WIR

G18 CABLE W18 F 1900974

CONDUCTOR NUMBER	ITEM NO. (2)	INDIVIDUAL LENGTH	FROM CUT WIRE OR SHIELD STRIP WIRE OR JACKET	FROM CIRCUIT POINT (2)	FROM TIN (2)	FROM TERMINATION SPEC. (1)	FROM ITEM NO.	FROM NO.	TO CUT WIRE OR SHIELD STRIP WIRE OR JACKET	TO CIRCUIT POINT (2)	TO TIN (2)	TO TERMINATION SPEC. (1)	TO ITEM NO.	TO NO.
A 65R			E10	25N					E11	25N				
A 66	19			380	350	A 11	7A			380	350	7 8	5	
												A 11		
A 66B	4		SHLD A66	25N					E21	25N				
A 66L			E8	25N					E9	25N				
A 66R			E10	25N					E11	25N				
A 67	19			380	350	A 11	7A			380	350	7 8	5	
												A 11		
A 67B	4		SHLD A67	25N					E21	25N				
A 67L			E8	25N					E9	25N				
A 67R			E10	25N					E11	25N				
A 68	19			380	350	A 11	7A			380	350	7 8	5	
												A 11		
A 68B	4		SHLD A68	25N					E21	25N				
A 68L			E14	25N					E15	25N				
A 68R			E16	25N					E17	25N				
A 69	19			430	400	A 11	7A			430	400	7 8	5	
												A 11		

(1) THE STD CONDUCTOR TERMINATION FIGURES ARE PER
(2) DIMENSIONS ARE IN INCHES AND TWO PLACE DECIMALS.

MANNED SPACECRAFT CENTER HOUSTON, TEXAS | SIZE A | 1900974
SCALE-NONE | REV LTR F | SHEET 15 OF 18

MIL 2089 - 4-63 WIR

G18 CABLE W18 F 1900974

CONDUCTOR NUMBER	ITEM NO. (2)	INDIVIDUAL LENGTH	FROM CUT WIRE OR SHIELD STRIP WIRE OR JACKET	FROM CIRCUIT POINT (2)	FROM TIN (2)	FROM TERMINATION SPEC. (1)	FROM ITEM NO.	FROM NO.	TO CUT WIRE OR SHIELD STRIP WIRE OR JACKET	TO CIRCUIT POINT (2)	TO TIN (2)	TO TERMINATION SPEC. (1)	TO ITEM NO.	TO NO.
A 69B	4		SHLD A69	25N					E21	25N				
A 69L			E14	25N					E15	25N				
A 69R			E16	25N					E17	25N				
A 70	19			430	400	A 11	7A			430	400	7 8	5	
												A 11		
A 70B	4		SHLD A70	25N					E22	25N				
A 70L			E14	25N					E15	25N				
A 70R			E16	25N					E17	25N				
A 71	19			430	400	A 11	7A			430	400	7 8	5	
												A 11		
A 71B	4		SHLD A71						E22					
A 71L			E12						E13					
A 71R			E18						E19					
A 72	19			480	450	A 11	7A			430	400	7 8	5	
												A 11		
A 72B	4		SHLD A72	25N					E22					
A 72L			E12						E13					
A 72R			E18	25N					E19					

(1) THE STD CONDUCTOR TERMINATION FIGURES ARE PER
(2) DIMENSIONS ARE IN INCHES AND TWO PLACE DECIMALS.

MANNED SPACECRAFT CENTER HOUSTON, TEXAS | SIZE A | 1900974
SCALE-NONE | REV LTR F | SHEET 16 OF 18

MIL 2089 - 4-63 WIR

G18 CABLE W18 F 1900974

CONDUCTOR NUMBER	ITEM NO. (2)	INDIVIDUAL LENGTH	FROM CUT WIRE OR SHIELD STRIP WIRE OR JACKET	FROM CIRCUIT POINT (2)	FROM TIN (2)	FROM TERMINATION SPEC. (1)	FROM ITEM NO.	FROM NO.	TO CUT WIRE OR SHIELD STRIP WIRE OR JACKET	TO CIRCUIT POINT (2)	TO TIN (2)	TO TERMINATION SPEC. (1)	TO ITEM NO.	TO NO.
A 73	19			480	450	A 11	7A			480	450	7 8	5	
												A 11		
A 73B	4		SHLD A73	25N					E22	25N				
A 73L			E12	25N					E13	25N				
A 73R			E18	25N					E19	25N				
A 74	5		P1-V	10N					E23	25N				
A 75	4		E20	25N					E21	25N				
A 76	4		E21	25N					E22	25N				
A 77	4		E22	25N					E23	25N				
A 78	4		E23	25N					P2-25	10N				

(1) THE STD CONDUCTOR TERMINATION FIGURES ARE PER
(2) DIMENSIONS ARE IN INCHES AND TWO PLACE DECIMALS.

MANNED SPACECRAFT CENTER HOUSTON, TEXAS | SIZE A | 1900974
SCALE-NONE | REV LTR F | SHEET 17 OF 18

MIL 2089 - 4-63 WIR

REVISIONS					
SYM	ZONE	DESCRIPTION	CHG NO	DATE	APPD

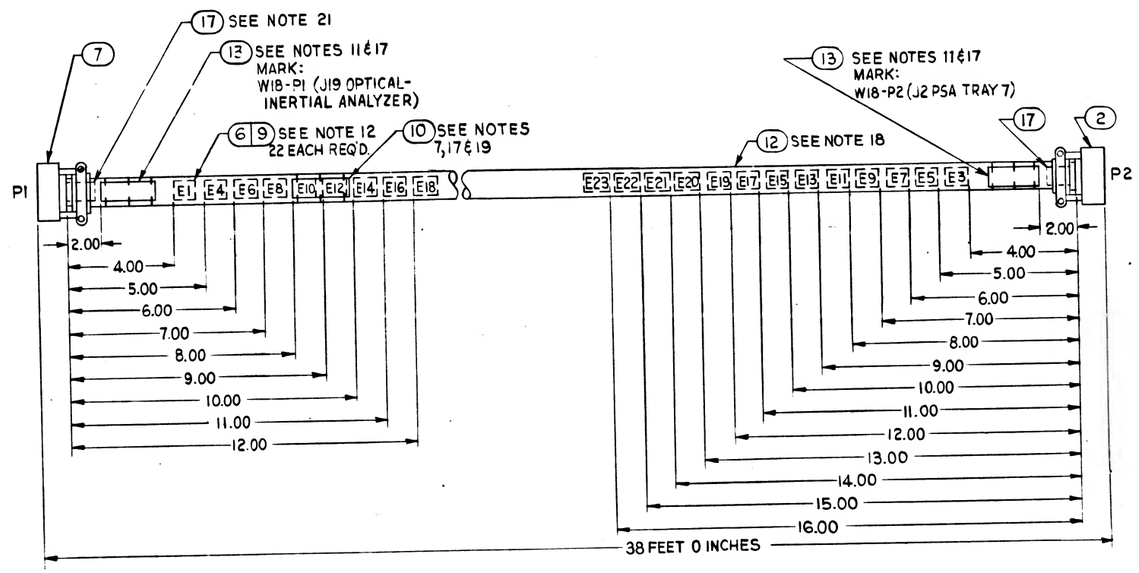

LOCATION TOLERANCE
(EXCEPT LENGTH):
+.50
-.50

NEXT ASSY	USED ON	UNLESS OTHERWISE SPECIFIED DIMENSIONS ARE IN INCHES TOLERANCES ON FRACTIONS + — DECIMALS + — ANGLES + —	AC SPARK PLUG DIVISION, GMC MILWAUKEE, WISCONSIN	MANNED SPACECRAFT CENTER HOUSTON, TEXAS
APPLICATION		DO NOT SCALE THIS DRAWING	ACSP PN	CABLE INTERCONNECT W18 1SS, OSS, & G&N TESTING
		MATERIAL	DRAWN T. KOSMATKA 1 NOV 63 DATE	
			CHECKED E. HINTZ 12 NOV 63	
			APPROVAL R. B. LIGON 13 NOV 63	
			APPROVAL L. GEDIMAN 3 JAN 64	
		CONTRACT NAS 9-497	NASA APPROVAL J. BARNARD	CODE IDENT NO. / SIZE D / 1900974
			MIT APPROVAL W. KUPFER	SCALE NONE / SHEET 18 OF 18

MIL 1077D-K

APPLICATION		REVISIONS			
NEXT ASSY	USED ON	SYM	DESCRIPTION	DATE	APPROVAL
1901308	1900005-011	A	CHANGE IN ACCORDANCE WITH CM 193385 TDRR 09707	6 FEB 64	J J J W.A.
		B	CHANGE IN ACCORDANCE WITH CM 195507 TDRR 09708	12 MAR 64	RJF W.A.
		C	CHANGE IN ACCORDANCE WITH CM 195890 TDRR 09708	2 APR 64	JWP MEM
		D	CHANGE IN ACCORDANCE WITH CM 196059 TDRR 09708	23 APR 64	HS PZ
		(r) E	CHANGE IN ACCORDANCE WITH CM 196920 REVISED PER TDRR 09709	21 MAY 64	J J J PZ
		(m) F	CHANGE IN ACCORDANCE WITH CM 198677 TDRR 12359	27 JUL 64	J J J MEM
		(m) G	CHANGE IN ACCORDANCE WITH CM 198928 REVISED PER TDRR 12351	30 JUL 64	J J J DLK
		(M) H	CHANGE IN ACCORDANCE WITH CM 302656 REVISED PER TDRR 14409	19 SEP 64	JWP DAS
		J	REVISED & UPGRADED TO CLASS A PER TDRR 15613	25 JAN 65	J J J W.A.

V2-64

REV																			
SHEET																			
REV STATUS OF SHEETS	REV	J	J	J	J	J	J	J	J	J	J	J	J	J	J	J	J	J	J
	SHEET	1	2	3	4	5	6	7	8	9	10	11	12	13	14	15	16	17	18

AC SPARK PLUG DIVISION, GMC
MILWAUKEE, WISCONSIN

MANNED
SPACECRAFT CENTER
HOUSTON, TEXAS

ACSP PN

DRAWN J. Fernandez DATE 1 NOV 63
CHECKED [illegible] 12 NOV 63
APPROVAL [illegible] 13 NOV 63
APPROVAL L. Goldman 1/3/64

NASA APPROVAL [illegible]
MIT APPROVAL [illegible]

CONTRACT NAS 9-497

CABLE INTERCONNECT W18
1SS, OSS & G & N TESTING

CODE IDENT NO.	SIZE		REV
	A	1900974	J

SCALE NONE

SHEET 1 OF 18

PENNANT NOTE — GENERAL NOTES

1 SEE CONDUCTOR CHART. PENNANT NOTE 1.

2 SEE CONDUCTOR CHART. PENNANT NOTE 2.

3 INTERPRET DRAWING IN ACCORDANCE WITH STANDARDS PRESCRIBED BY MIL-D-70327.

4 MARK CONDUCTOR IDENTIFICATION ON SINGLE CONDUCTORS PER ND1002019 OMITTING ALL SUFFIX LETTERS EXCEPT A AND B.

5 SPACING OF CONDUCTOR IDENTIFICATION SHALL BE EVERY 15 INCHES MAX. AND AT EACH TERMINATION.

6 SPIRALLING OF THE MARKING IS ALLOWED.

7 IDENTIFY USING DRAWING NO. AND REVISION LETTER PER MIL-STD-130 (ES-267). .12 INCH HIGH CHARACTERS WHITE.

8 Y OR N IN TINNED COLUMN INDICATES YES OR NO.

9 A LETTER WITH AN ASTERISK SUFFIX, INDICATES A LOWER CASE LETTER.

10 VENDOR ITEM - SEE SPECIFICATION CONTROL DRAWING.

11 MARK IDENTIFICATION BAND WITH REFERENCE DESIGNATION AS NOTED .12 INCH HIGH COLOR WHITE. HOT IMPRESSION STAMPING PER ND1002019. CENTRALIZE.

12 MARK SLEEVING WITH REFERENCE DESIGNATIONS AS SHOWN .12 INCH HIGH. COLOR BLACK PER ND1002019.

13 MARK SLEEVING OF MULTI-CONDUCTORS WITH THE CONDUCTOR NUMBER .12 INCH HIGH, COLOR BLACK, PER ND1002019 WHEN SLEEVING ITEM NUMBERS FOLLOW AN A OR T IN THE ACCESSORIES ITEM NUMBER FIELD.

PENNANT NOTE — GENERAL NOTES

14 A OR T PREFIX IN THE ACCESSORIES ITEM NUMBER COLUMN INDICATES THE READING POSITION AWAY FROM TERMINATION OR TOWARD TERMINATION RESPECTIVELY. OF THE WIRE MARKER SLEEVE.

15 THE SUFFIX LETTER OF A CONDUCTOR IDENTIFICATION NUMBER INDICATES CONDUCTOR SHIELDING, COLOR, OR MARKING.
A - FROM END SHIELD
L - WHITE WITH BLUE TRACER OR LETTER L
R - WHITE WITH RED TRACER OR LETTER R

16 ASSEMBLE CONTACTS IN ALL CONNECTOR GROMMET HOLES.

17 SECURE TO CABLE USING ITEM 14. MARKING TO READ AWAY FROM CONNECTOR.

18 SEAL ZIPPER TUBING PER ND1002153

19 SERIALIZE PER ND1002023

20 ITEM 16 FURNISHED WITH ITEM 1.

21 ITEM 17 SHALL BE SHORTENED WHEN NECESSARY TO AVOID INTERFERENCE WITH FERRULES AND MAY BE CUT LENGTHWISE ON ONE SIDE. SELECT ONE OR MORE OF ITEM 17 AS REQUIRED TO FIT.

22 THE FOLLOWING MULTICONDUCTORS ARE TO BE TWISTED TOGETHER WITH THE BEST COMMERCIAL PRACTICE. THEY SHALL BE TWISTED WITH A LAY NOT GREATER THAN 14 TIMES NOR LESS THAN 8 TIMES THE PITCH DIAMETER. AS TWISTED PAIRS. CONDUCTORS (A36 AND A39). (A42 AND A45). (A51 AND A54) AND (A48 AND A57)

23 SEE NOTES 10 AND 16

PENNANT NOTE — GENERAL NOTES

TOLERANCE CHART. UNLESS OTHERWISE SPECIFIED ——

APPLICABLE LENGTH FOR WIRE OR CABLE. STRIP WIRE. STRIP JACKET. CUT WIRE OR CUT SHIELD.	TOLERANCE				
	WIRE OR CABLE	STRIP WIRE	STRIP JACKET	CUT WIRE	CUT SHIELD
UNDER 1 INCH	+ .06-.00	+.03-.00	+.06-.06	+.06-.06	+.06-.06
1 INCH TO 6 INCHES	+ .50-.00	+.06-.00	+.25-.25	+.25-.25	+.25-.25
6 INCHES TO 6 FEET	+1.00-.00		+.50-.50	+.50-.50	+.50-.50
OVER 6 FEET	+2.00-.00				

PENNANT NOTE — LIST OF MATERIALS

NOTE	ITEM	QTY	PART NO	DESCRIPTION
16	1	1	MS3126F-20-41SW (1897044-411)	CONNECTOR PLUG
23	2	1	1902030- 2	CONNECTOR PLUG
	3	1	1900974-001	WIRE ND1002181 TYPE 2. CLASS 4. T2. 22AWG WHITE (CONDUCTORS MARKED R AND L RESPECTIVELY. 152 FT. TOTAL LENGTH.
	4	1	1900974-002	WIRE ND1002181 TYPE 1. CLASS 1. 22AWG 30 FT.. TOTAL LENGTH.
	5	1	1900974-003	WIRE ND1002181 TYPE 1. CLASS 1. 20AWG. 88 FT. TOTAL LENGTH.
10	6	34	1010490-200	INSULATION-SLEEVING. ELEC
10	7	16	1000243-011	FERRULE-ELEC COND
10	8	16	1000242-009	FERRULE-ELEC COND
10	9	34	1016006-001	SPLICE REDUCER
10	10	1	1016128-011	BAND-IDENTIFICATION
10	11	32	1010490-198	INSULATION-SLEEVING ELEC
	12	1	1900974-004	ZIPPER TUBING ND1002155. TYPE 1. PLASTIC. FLEXIBLE 1.00 IN. DIA. 38 FT. TOTAL LENGTH
10	13	2	1016128-041	BAND IDENTIFICATION
	14	AR	MIL-T-713	LACING TAPE. TYPE P. CLASS 2. BLACK (ES-2732 NO. 18)
10	15	38	1010738- 5	CONTACTS. PINS

PERMANT LIST OF MATERIALS

NOTE	ITEM	QTY	PART NO	DESCRIPTION
20	16			CONTACT SOCKETS
21	17	AR	1897147-106,	108 AND 112, CABLE CLAMP SLEEVE
	18			DELETED DELETED DELETED
	19		1900974-006	WIRE MD1002181 TYPE 2, CLASS 4, 20AWG WHITE (CONDUCTORS MARKED R AND L RESPECTIVELY) 456 FEET TOTAL LENGTH

MANNED SPACECRAFT CENTER HOUSTON, TEXAS | SIZE A | 1900974
SCALE - NONE | REV LTR J | SHEET 6 OF 18

CONDUCTOR INDIVIDUAL LENGTH NUMBER	ITEM NO. (2)		FROM CUT WIRE OR SHIELD STRIP WIRE OR JACKET CIRCUIT POINT (2)	TIN (2)	TERMINATION SPEC. (1)	ITEM NO.	NO.	TO CUT WIRE OR SHIELD STRIP WIRE OR JACKET CIRCUIT POINT (2)	TIN (2)	TERMINATION SPEC. (1)	ITEM NO.	NO.
A 1	3		230	200	7 8	5		230	200	A 11	7A	
					A 11							
A 1A	4		SHLD A1	25W				E1	25W			
A 1L			P1-C*	19W	16			P2-20	10W	15		
A 1R			P1-B*	19W	16			P2-14	10W	15		
A 2			DELETED									
A 3			DELETED									
A 4			DELETED									
A 5			DELETED									
			DELETED									
A 5A			DELETED									
A 5L			DELETED									
A 5R			DELETED									
A 6	3		230	200	7 8	5		230	200	A 11	7A	
					A 11							
A 6A	4		SHLD A6	25W				E1	25W			
A 6L			P1-H*	19W	16			P2-21	10W	15		
A 6R			P1-G*	19W	16			P2-15	10W	15		

(1) THE STD CONDUCTOR TERMINATION FIGURES ARE PER
(2) DIMENSIONS ARE IN INCHES AND TWO PLACE DECIMALS.

MANNED SPACECRAFT CENTER HOUSTON, TEXAS | SIZE A | 1900974
SCALE - NONE | REV LTR J | SHEET 7 OF 18

CONDUCTOR INDIVIDUAL LENGTH NUMBER	ITEM NO. (2)		FROM CUT WIRE OR SHIELD STRIP WIRE OR JACKET CIRCUIT POINT (2)	TIN (2)	TERMINATION SPEC. (1)	ITEM NO.	NO.	TO CUT WIRE OR SHIELD STRIP WIRE OR JACKET CIRCUIT POINT (2)	TIN (2)	TERMINATION SPEC. (1)	ITEM NO.	NO.
A 7	3		230	200	7 8	5		230	200	A 11	7A	
					A 11							
A 7A	4		SHLD A7	25W				E1	25W			
A 7L			P1-P*	19W	16			P2- 5	10W	15		
A 7R			P1-N*	19W	16			P2- 6	10W	15		
A 8			DELETED									
A 9			DELETED									
			DELETED									
A 9A			DELETED									
A 9L			DELETED									
A 9R			DELETED									
A 10			DELETED									
A 11			DELETED									
			DELETED									
A 11A			DELETED									
A 11L			DELETED									
A 11R			DELETED									
A 12			DELETED									

(1) THE STD CONDUCTOR TERMINATION FIGURES ARE PER
(2) DIMENSIONS ARE IN INCHES AND TWO PLACE DECIMALS.

MANNED SPACECRAFT CENTER HOUSTON, TEXAS | SIZE A | 1900974
SCALE - NONE | REV LTR J | SHEET 8 OF 18

CONDUCTOR INDIVIDUAL LENGTH NUMBER	ITEM NO. (2)		FROM CUT WIRE OR SHIELD STRIP WIRE OR JACKET CIRCUIT POINT (2)	TIN (2)	TERMINATION SPEC. (1)	ITEM NO.	NO.	TO CUT WIRE OR SHIELD STRIP WIRE OR JACKET CIRCUIT POINT (2)	TIN (2)	TERMINATION SPEC. (1)	ITEM NO.	NO.
A 13			DELETED									
A 14			DELETED									
A 15			DELETED									
A 16			DELETED									
A 17	3		280	250	7 8	5		280	250	A 11	7A	
					A 11							
A 17A	4		SHLD A17	25W				E1	25W			
A 17L			P1-A*	19W	16			P2- 7	10W	15		
A 17R			P1-Z	19W	16			P2-13	10W	15		
A 18			DELETED									
A 19			DELETED									
A 20			DELETED									
A 21			DELETED									
A 22			DELETED									
A 22A			DELETED									
A 22L			DELETED									
A 22R			DELETED									
A 23			DELETED									

(1) THE STD CONDUCTOR TERMINATION FIGURES ARE PER
(2) DIMENSIONS ARE IN INCHES AND TWO PLACE DECIMALS.

MANNED SPACECRAFT CENTER HOUSTON, TEXAS | SIZE A | 1900974
SCALE - NONE | REV LTR J | SHEET 9 OF 18

CONDUCTOR INDIVIDUAL LENGTH NUMBER	ITEM NO. (2)		FROM CUT WIRE OR SHIELD STRIP WIRE OR JACKET CIRCUIT POINT (2)	T I N (2)	TERMINATION SPEC. (1) ITEM NO.	NO.	TO CUT WIRE OR SHIELD STRIP WIRE OR JACKET CIRCUIT POINT (2)	T I N (2)	TERMINATION SPEC (1) ITEM NO.	NO.
A 23A			DELETED							
A 23L			DELETED							
A 23R			DELETED							
A 24			DELETED							
A 24A			DELETED							
A 24L			DELETED							
A 24R			DELETED							
A 25			DELETED							
A 25A			DELETED							
A 25L			DELETED							
A 25R			DELETED							
A 26	4		P1-J*	19N	16		E1	25N		
A 27			DELETED							
A 28	4		P2-19	10N	15		P2-26	10N	15	
A 29			DELETED							
A 30	5		P1-T	19N	16		E3	25N		
A 31	4		E3	25N			P2-17	10N	15	
A 32			DELETED							

(1) THE STD CONDUCTOR TERMINATION FIGURES ARE PER
(2) DIMENSIONS ARE IN INCHES AND TWO PLACE DECIMALS.

MIL 2089 - 4.65 WIR

MANNED SPACECRAFT CENTER HOUSTON, TEXAS | SIZE A | 1900974
SCALE - NONE | REV LTR J | SHEET 10 OF 18

CONDUCTOR INDIVIDUAL LENGTH NUMBER	ITEM NO. (2)		FROM CUT WIRE OR SHIELD STRIP WIRE OR JACKET CIRCUIT POINT (2)	T I N (2)	TERMINATION SPEC. (1) ITEM NO.	NO.	TO CUT WIRE OR SHIELD STRIP WIRE OR JACKET CIRCUIT POINT (2)	T I N (2)	TERMINATION SPEC (1) ITEM NO.	NO.
A 33			DELETED							
A 34	4		P2-33	10N	15		P2-34	10N	15	
A 35	5		P1-R*	19N	16		E4	25N		
A 36			DELETED							
A 36L			DELETED							
A 36R			DELETED							
A 36Y			DELETED							
A 37	4		E5	25N			P2-32	10N	15	
A 38	5		P1-Q*	19N	16		E6	25N		
A 39			DELETED							
A 39L			DELETED							
A 39R			DELETED							
A 39Y			DELETED							
A 40	4		E7	25N			P2-24	10N	15	
A 41	5		P1-S*	19N	16		E8	25N		
A 42			DELETED							
A 42L			DELETED							
A 42R			DELETED							

(1) THE STD CONDUCTOR TERMINATION FIGURES ARE PER
(2) DIMENSIONS ARE IN INCHES AND TWO PLACE DECIMALS.

MIL 2089 - 4.65 WIR

MANNED SPACECRAFT CENTER HOUSTON, TEXAS | SIZE A | 1900974
SCALE - NONE | REV LTR J | SHEET 11 OF 18

CONDUCTOR INDIVIDUAL LENGTH NUMBER	ITEM NO. (2)		FROM CUT WIRE OR SHIELD STRIP WIRE OR JACKET CIRCUIT POINT (2)	T I N (2)	TERMINATION SPEC. (1) ITEM NO.	NO.	TO CUT WIRE OR SHIELD STRIP WIRE OR JACKET CIRCUIT POINT (2)	T I N (2)	TERMINATION SPEC (1) ITEM NO.	NO.
A 42Y			DELETED							
A 43	4		E9	25N			P2-31	10N	15	
A 44	5		P1-A	19N	16		E10	25N		
A 45			DELETED							
A 45L			DELETED							
A 45R			DELETED							
A 45Y			DELETED							
A 46	4		E11	25N			P2-23	10N	15	
A 47	5		P1-T*	19N	16		E12	25N		
A 48			DELETED							
A 48L			DELETED							
A 48R			DELETED							
A 48Y			DELETED							
A 49	4		E13	25N			P2-35	10N	15	
A 50	5		P1-F*	19N	16		E14	25N		
A 51			DELETED							
A 51L			DELETED							
A 51R			DELETED							

(1) THE STD CONDUCTOR TERMINATION FIGURES ARE PER
(2) DIMENSIONS ARE IN INCHES AND TWO PLACE DECIMALS.

MIL 2089 - 4.65 WIR

MANNED SPACECRAFT CENTER HOUSTON, TEXAS | SIZE A | 1900974
SCALE - NONE | REV LTR J | SHEET 12 OF 18

CONDUCTOR INDIVIDUAL LENGTH NUMBER	ITEM NO. (2)		FROM CUT WIRE OR SHIELD STRIP WIRE OR JACKET CIRCUIT POINT (2)	T I N (2)	TERMINATION SPEC. (1) ITEM NO.	NO.	TO CUT WIRE OR SHIELD STRIP WIRE OR JACKET CIRCUIT POINT (2)	T I N (2)	TERMINATION SPEC (1) ITEM NO.	NO.
A 51Y			DELETED							
A 52	4		E15	25N			P2-36	10N	15	
A 53	5		P1-E*	19N	16		E16	25N		
A 54			DELETED							
A 54L			DELETED							
A 54R			DELETED							
A 54Y			DELETED							
A 55	4		E17	25N			P2-28	10N	15	
A 56	5		P1-B	19N	16		E18	25N		
A 57			DELETED							
A 57L			DELETED							
A 57R			DELETED							
A 57Y			DELETED							
A 58	4		E19	25N			P2-27	10N	15	
A 59	4		E3	25N			P2-18	10N	15	
A 60	4		E3	25N			E23	25N		
A 61	4		P2- 9	10N	15		P2-10	10N	15	
A 62	19			330	300	A 11 7A		330	300	7 8 5

(1) THE STD CONDUCTOR TERMINATION FIGURES ARE PER
(2) DIMENSIONS ARE IN INCHES AND TWO PLACE DECIMALS.

MIL 2089 - 4.65 WIR

MANNED SPACECRAFT CENTER HOUSTON, TEXAS | SIZE A | 1900974
SCALE - NONE | REV LTR J | SHEET 13 OF 18

G18 CABLE W18 J 1900974

CONDUCTOR INDIVIDUAL LENGTH NUMBER	ITEM NO. (2)	FROM CUT WIRE OR SHIELD STRIP WIRE OR JACKET CIRCUIT POINT (2)	TIN (2)	TERMINATION SPEC. (1) ITEM NO.	NO.	TO CUT WIRE OR SHIELD STRIP WIRE OR JACKET CIRCUIT POINT (2)	TIN (2)	TERMINATION SPEC. (1) ITEM NO.	NO.
								A 11	
A 62B	4	SHLD A62	25			E20	25		
A 62L		E4	25			E5	25		
A 62R		E6	25			E7	25		
A 63	19		330	300 A 11	7A		330	300 7 8	5
								A 11	
A 63B	4	SHLD A63	25			E20	25		
A 63L		E4	25			E5	25		
A 63R		E6	25			E7	25		
A 64	19		330	300 A 11	7A		330	300 7 8	5
								A 11	
A 64B	4	SHLD A64	25			E20	25		
A 64L		E4	25			E5	25		
A 64R		E6	25			E7	25		
A 65	19		330	300 A 11	7A		330	300 7 8	5
								A 11	
A 65B	4	SHLD A65	25			E20			
A 65L		E8	25N			E9	25N		

1> THE STD CONDUCTOR TERMINATION FIGURES ARE PER
2> DIMENSIONS ARE IN INCHES AND TWO PLACE DECIMALS.

MANNED SPACECRAFT CENTER HOUSTON, TEXAS | SIZE A | 1900974
SCALE - NONE | REV LTR J | SHEET 14 OF 18

MIL 2089 4-63 WIR

G18 CABLE W18 J 1900974

CONDUCTOR INDIVIDUAL LENGTH NUMBER	ITEM NO. (2)	FROM CUT WIRE OR SHIELD STRIP WIRE OR JACKET CIRCUIT POINT (2)	TIN (2)	TERMINATION SPEC. (1) ITEM NO.	NO.	TO CUT WIRE OR SHIELD STRIP WIRE OR JACKET CIRCUIT POINT (2)	TIN (2)	TERMINATION SPEC. (1) ITEM NO.	NO.
A 65R		E10	25N			E11	25N		
A 66	19		380	350 A 11	7A		380	350 7 8	5
								A 11	
A 66B	4	SHLD A66	25N			E21	25N		
A 66L		E8	25N			E9	25N		
A 66R		E10	25N			E11	25N		
A 67	19		380	350 A 11	7A		380	350 7 8	5
								A 11	
A 67B	4	SHLD A67	25N			E21	25N		
A 67L		E8	25N			E9	25N		
A 67R		E10	25N			E11	25N		
A 68	19		380	350 A 11	7A		380	350 7 8	5
								A 11	
A 68B	4	SHLD A68	25N			E21	25N		
A 68L		E14	25N			E15	25N		
A 68R		E16	25N			E17	25N		
A 69	19		430	400 A 11	7A		430	400 7 8	5
								A 11	

1> THE STD CONDUCTOR TERMINATION FIGURES ARE PER
2> DIMENSIONS ARE IN INCHES AND TWO PLACE DECIMALS.

MANNED SPACECRAFT CENTER HOUSTON, TEXAS | SIZE A | 1900974
SCALE - NONE | REV LTR J | SHEET 15 OF 18

MIL 2089 4-63 WIR

G18 CABLE W18 J 1900974

CONDUCTOR INDIVIDUAL LENGTH NUMBER	ITEM NO. (2)	FROM CUT WIRE OR SHIELD STRIP WIRE OR JACKET CIRCUIT POINT (2)	TIN (2)	TERMINATION SPEC. (1) ITEM NO.	NO.	TO CUT WIRE OR SHIELD STRIP WIRE OR JACKET CIRCUIT POINT (2)	TIN (2)	TERMINATION SPEC. (1) ITEM NO.	NO.
A 69B	4	SHLD A69	25N			E21	25N		
A 69L		E14	25N			E15	25N		
A 69R		E16	25N			E17	25N		
A 70	19		430	400 A 11	7A		430	400 7 8	5
								A 11	
A 70B	4	SHLD A70	25N			E22	25N		
A 70L		E14	25N			E15	25N		
A 70R		E16	25N			E17	25N		
A 71	19		430	400 A 11	7A		430	400 7 8	5
								A 11	
A 71B	4	SHLD A71				E22			
A 71L		E12				E13			
A 71R		E18				E19			
A 72	19		480	450 A 11	7A		430	400 7 8	5
								A 11	
A 72B	4	SHLD A72	25N			E22			
A 72L		E12				E13			
A 72R		E18	25N			E19			

1> THE STD CONDUCTOR TERMINATION FIGURES ARE PER
2> DIMENSIONS ARE IN INCHES AND TWO PLACE DECIMALS.

MANNED SPACECRAFT CENTER HOUSTON, TEXAS | SIZE A | 1900974
SCALE - NONE | REV LTR J | SHEET 16 OF 18

MIL 2089 4-63 WIR

G18 CABLE W18 J 1900974

CONDUCTOR INDIVIDUAL LENGTH NUMBER	ITEM NO. (2)	FROM CUT WIRE OR SHIELD STRIP WIRE OR JACKET CIRCUIT POINT (2)	TIN (2)	TERMINATION SPEC. (1) ITEM NO.	NO.	TO CUT WIRE OR SHIELD STRIP WIRE OR JACKET CIRCUIT POINT (2)	TIN (2)	TERMINATION SPEC. (1) ITEM NO.	NO.
A 73	19		480	450 A 11	7A		480	450 7 8	5
								A 11	
A 73B	4	SHLD A73	25N			E22	25N		
A 73L		E12	25N			E13	25N		
A 73R		E18	25N			E19	25N		
A 74	5	P1-V	19N			E23	25N		
A 75	4	E20	25N			E21	25N		
A 76	4	E21	25N			E22	25N		
A 77	4	E22	25N			E23	25N		
A 78	4	E23	25N			P2-25	10N		

1> THE STD CONDUCTOR TERMINATION FIGURES ARE PER
2> DIMENSIONS ARE IN INCHES AND TWO PLACE DECIMALS.

MANNED SPACECRAFT CENTER HOUSTON, TEXAS | SIZE A | 1900974
SCALE - NONE | REV LTR J | SHEET 17 OF 18

MIL 2089 4-63 WIR

REVISIONS					
SYM	ZONE	DESCRIPTION	CHG NO	DATE	APPD

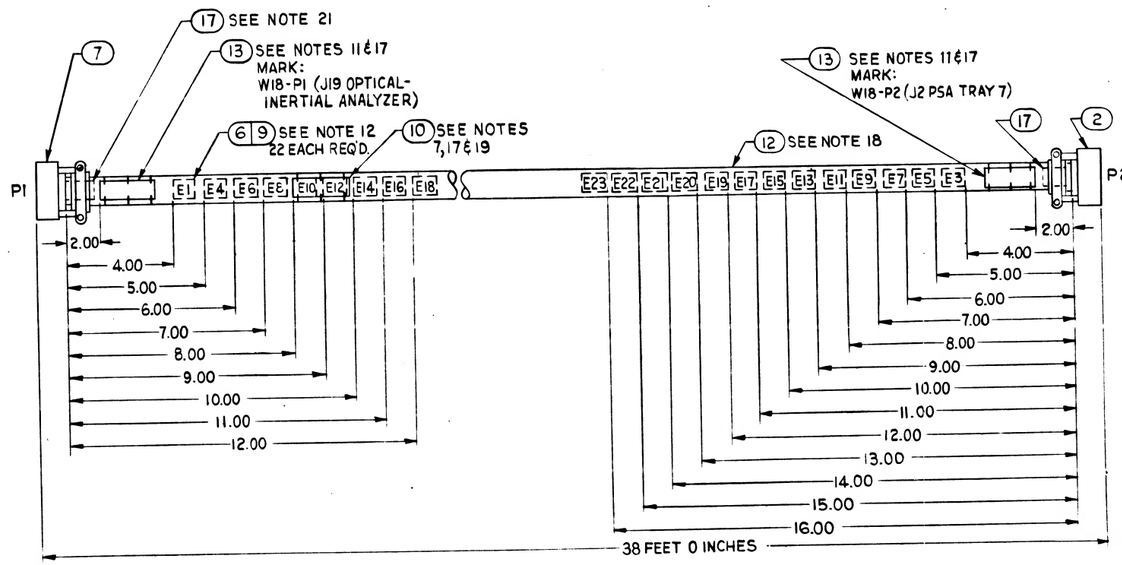

LOCATION TOLERANCE
(EXCEPT LENGTH):
+.50
-.50

NEXT ASSY	USED ON
APPLICATION	

UNLESS OTHERWISE SPECIFIED
DIMENSIONS ARE IN INCHES
TOLERANCES ON

FRACTIONS	DECIMALS	ANGLES
+ —	+ —	+ —
— —	— —	— —

DO NOT SCALE THIS DRAWING

MATERIAL

CONTRACT NAS 9-497

AC SPARK PLUG DIVISION, GMC
MILWAUKEE WISCONSIN

ACSP PN

DRAWN T. KOSMATKA DATE 1 NOV 63
CHECKED E. HINTZ 12 NOV 63
APPROVAL R.B. LIGON 13 NOV 63
APPROVAL L. GEDIMAN 3 JAN 64

NASA APPROVAL J. BARNARD
MIT APPROVAL W. KUPFER

MANNED
SPACECRAFT CENTER
HOUSTON, TEXAS

CABLE INTERCONNECT W18
1SS, OSS, & G&N TESTING

CODE IDENT NO
SIZE D
1900974
SCALE NONE
SHEET 13 OF 13

MIL 1077

GENERAL NOTES

NOTES

1 SEE CONDUCTOR CHART
2 SEE CONDUCTOR CHART
3 INTERPRET DRAWING IN ACCORDANCE WITH STANDARDS PRESCRIBED BY MIL-D-70327.
4 MARK CONDUCTOR IDENTIFICATION ON SINGLE CONDUCTORS PER ND1002019 OMITTING ALL SUFFIX LETTERS EXCEPT A AND B.
5 SPACING OF CONDUCTOR IDENTIFICATION SHALL BE EVERY 15 INCHES MAX AND AT EACH TERMINATION.
6 SPIRALLING OF THE MARKING IS ALLOWED.
7 IDENTIFY USING DRAWING NO. AND REVISION LETTER PER MIL-STD-130 (ES-267). .12 INCH HIGH CHARACTERS BLACK.
8 Y OR N IN TINNED COLUMN INDICATES YES OR NO.
9 A LETTER WITH AN ASTERISK SUFFIX, INDICATES A LOWER CASE LETTER.
10 VENDOR ITEM - SEE SPECIFICATION CONTROL DRAWING.
11 MARK IDENTIFICATION BAND WITH REFERENCE DESIGNATION AS NOTED .12 INCH HIGH COLOR BLACK, HOT IMPRESSION STAMPING PER ND1002019. CENTRALIZE.

MANNED SPACECRAFT CENTER HOUSTON, TEXAS	SIZE A	1900974
SCALE-NONE	REV LTR +	SHEET 2 OF 10

MIL 2084 4-63

GENERAL NOTES

NOTES

12 MARK SLEEVING WITH REFERENCE DESIGNATIONS AS SHOWN .12 INCH HIGH, COLOR BLACK PER ND1002019.
13 MARK SLEEVING OF MULTI-CONDUCTORS WITH THE CONDUCTOR NUMBER .12 INCH HIGH, COLOR BLACK, PER ND1002019 WHEN SLEEVING ITEM NUMBERS FOLLOW AN A OR T IN THE ACCESSORIES ITEM NUMBER FIELD.
14 A OR T PREFIX IN THE ACCESSORIES ITEM NUMBER COLUMN INDICATES THE READING POSITION AWAY FROM TERMINATION OR TOWARD TERMINATION RESPECTIVELY, OF THE WIRE MARKER SLEEVE.
15 THE SUFFIX LETTER OF A CONDUCTOR IDENTIFICATION NUMBER INDICATES CONDUCTOR SHIELDING, COLOR, OR MARKING.
    A - FROM END SHIELD
    L - WHITE WITH BLUE TRACER OR LETTER L
    R - WHITE WITH RED TRACER OR LETTER R
16 ASSEMBLE CONTACTS IN ALL CONNECTOR GROMMET HOLES
17 SECURE TO CABLE USING ITEM 14, MARKING TO READ AWAY FROM CONNECTOR
18 SEAL ZIPPER TUBING PER ND 1002153
19 SERIALIZE PER ND 1002023

MANNED SPACECRAFT CENTER HOUSTON, TEXAS	SIZE A	1900974
SCALE-NONE	REV LTR +	SHEET 3 OF 10

MIL 2084 4-63

FOR INFORMATION ONLY

CLASS B RELEASE TDR No. 05663 DATE 1/7/64

REVISIONS

APPLICATION NEXT ASSY	USED ON	SYM	DESCRIPTION	DATE	APPROVAL
1900005-011	900005-011				

REV										
SHEET										
REV STATUS	+	+	+	+	+	+	+	+	+	+
OF SHEETS SHEET	1	2	3	4	5	6	7	8	9	10

MANNED SPACECRAFT CENTER HOUSTON, TEXAS

CABLE INTERCONNECT W18
1SS, OSS & G & N TESTING

AC SPARK PLUG DIVISION, GMC
MILWAUKEE, WISCONSIN

ACSP PN

DRAWN DATE 12 NOV 63
CHECKED DATE 12 NOV 63
APPROVAL DATE 13 NOV 63
APPROVAL DATE 1/3/64
NASA APPROVAL
MIT APPROVAL

CODE IDENT NO. 1900974 SIZE A REV

CONTRACT NAS 9-497 SCALE NONE SHEET 1 OF 10

GENERAL NOTES

TOLERANCE CHART, UNLESS OTHERWISE SPECIFIED ---

APPLICABLE LENGTH FOR WIRE OR CABLE, STRIP WIRE, STRIP JACKET, CUT WIRE OR CUT SHIELD	TOLERANCE				
	WIRE OR CABLE	STRIP WIRE	STRIP JACKET	CUT WIRE	CUT SHIELD
UNDER 1 INCH	+ .06-.00	+.03-.00	+.06-.06	+.06-.06	+.06-.06
1 INCH TO 6 INCHES	+ .50-.00	+.06-.00	+.25-.25	+.25-.25	+.25-.25
6 INCHES TO 6 FEET	+1.00-.00		+.50-.50	+.50-.50	+.50-.50
OVER 6 FEET	+2.00-.00				

MANNED SPACECRAFT CENTER HOUSTON, TEXAS	SIZE A	1900974
SCALE-NONE	REV LTR +	SHEET 4 OF 10

MIL 2084 4-63

INCHES 0 1 2
PHOTOGRAPHIC SCALE ONLY

GIB CABLE W18 + 1900974

CONDUCTOR INDIVIDUAL LENGTH NUMBER	ITEM NO. (2)	FROM CUT WIRE OR SHIELD STRIP WIRE OR JACKET CIRCUIT POINT (2)	TIN (2)	TERMINATION SPEC. (1) ITEM NO.	NO.	TO CUT WIRE OR SHIELD STRIP WIRE OR JACKET CIRCUIT POINT (2)	TIN (2)	TERMINATION SPEC (1) ITEM NO.	NO.
A 1	3	230	200	7 8	5	230	200	A 11	7A
				A 11					
A 1A	4	SHLD A1	22N			E1	37N		
A 1L		P1-C*	22N			P2-C*	22N		
A 1R		P1-B*	22N			P2-B*	22N		
A 2	5	P1-N	22N			P2-N	22N		
A 3	5	P1-R	22N			P2-R	22N		
A 4	5	P1-P	22N			P2-P	22N		
A 5	3	230	200	7 8	5	230	200	A 11	7A
				A 11					
A 5A	4	SHLD A5	22N			E1	37N		
A 5L		P1-F*	22N			P2-F*	22N		
A 5R		P1-E*	22N			P2-E*	22N		
A 6	3	230	200	7 8	5	230	200	A 11	7A
				A 11					
A 6A	4	SHLD A6	22N			E1	37N		
A 6L		P1-H*	22N			P2-H*	22N		
A 6R		P1-G*	22N			P2-G*	22N		

(1) THE STD CONDUCTOR TERMINATION FIGURES ARE PER
(2) DIMENSIONS ARE IN INCHES AND TWO PLACE DECIMALS.

MANNED SPACECRAFT CENTER HOUSTON, TEXAS | SIZE A | 1900974
SCALE - NONE | REV LTR + | SHEET 6 OF 10

MIL 2085 - 4-63 WIR

GIB CABLE W18 + 1900974

CONDUCTOR INDIVIDUAL LENGTH NUMBER	ITEM NO. (2)	FROM CUT WIRE OR SHIELD STRIP WIRE OR JACKET CIRCUIT POINT (2)	TIN (2)	TERMINATION SPEC. (1) ITEM NO.	NO.	TO CUT WIRE OR SHIELD STRIP WIRE OR JACKET CIRCUIT POINT (2)	TIN (2)	TERMINATION SPEC (1) ITEM NO.	NO.
A 7	3	230	200	7 8	5	230	200	A 11	7A
				A 11					
A 7A	4	SHLD A7	22N			E1	37N		
A 7L		P1-P*	22N			P2-P*	22N		
A 7R		P1-N*	22N			P2-N*	22N		
A 8	5	P1-T	22N			P2-T	22N		
A 9	3	280	250	7 8		280	250	A 11	7A
				A 11					
A 9A	4	SHLD A9	22N			E1	37N		
A 9L		P1-R*	22N			P2-R*	22N		
A 9R		P1-Q*	22N			P2-Q*	22N		
A 10	5	P1-S	22N			P2-S	22N		
A 11	3	280	250	7 8		280	250	A 11	7A
				A 11					
A 11A	4	SHLD A11	22N			E1	37N		
A 11L		P1-T*	22N			P2-T*	22N		
A 11R		P1-S*	22N			P2-S*	22N		
A 12	5	P1-A	22N			P2-A	22N		

(1) THE STD CONDUCTOR TERMINATION FIGURES ARE PER
(2) DIMENSIONS ARE IN INCHES AND TWO PLACE DECIMALS.

MANNED SPACECRAFT CENTER HOUSTON, TEXAS | SIZE A | 1900974
SCALE - NONE | REV LTR + | SHEET 7 OF 10

MIL 2085 - 4-63 WIR

LIST OF MATERIAL

SEE NOTE	ITEM	REQ'D	PART NUMBER	DESCRIPTION
16	1	1	MS3126F20-41SW	(1897052-411) CONNECTOR PLUG
16	2	1	1010621-2 [illegible]	[illegible] CONNECTOR PLUG
	3	1	1900974-001	WIRE ND 1002181 TYPE 2, CLASS 4, T2, 20 AWG, WHITE (CONDUCTORS MARKED R&L RESPECTIVELY, 420 FT. TOTAL LENGTH.
	4	1	1900974-002	WIRE ND 1002181 TYPE 1, CLASS 1, 22 AWG, 12 FT., TOTAL LENGTH.
	5	1	1900974-003	WIRE ND 1002181 TYPE 1, CLASS 1, 20 AWG, 535 FT. TOTAL LENGTH.
10	6	2	1010490-200	INSULATION - SLEEVING, ELEC
10	7	11	1000243-011	FERRULE - ELEC COND
10	8	11	1000242-009	FERRULE - ELEC COND
10	9	2	1016006-001	SPLICE REDUCER
10	10	1	1016128-011	BAND-IDENTIFICATION
10	11	22	1010490-198	INSULATION-SLEEVING ELEC
	12	1	1900974-004	ZIPPER TUBING ND 1002155, TYPE 1, PLASTIC, FLEXIBLE 11/16 IN. DIA 42 FT. TOTAL LENGTH
10	13	2	1016128-041	BAND IDENTIFICATION
	14	AR	MIL-T-713	LACING TAPE, TYPE P, CLASS 2, BLACK (ES 2732 NO.18)
10	15	38	1010464-1	CONTACTS, PINS

MANNED SPACECRAFT CENTER HOUSTON, TEXAS | SIZE A | 1900974
SCALE - NONE | REV LTR + | SHEET 5 OF 10

MIL 2084 4-63

GIB CABLE W18 + 1900974

CONDUCTOR INDIVIDUAL LENGTH NUMBER	ITEM NO. (2)	FROM CUT WIRE OR SHIELD STRIP WIRE OR JACKET CIRCUIT POINT (2)	TIN (2)	TERMINATION SPEC. (1) ITEM NO.	NO.	TO CUT WIRE OR SHIELD STRIP WIRE OR JACKET CIRCUIT POINT (2)	TIN (2)	TERMINATION SPEC (1) ITEM NO.	NO.
A 13	5	P1-B	22N			P2-B	22N		
A 14	5	P1-C	22N			P2-C	22N		
A 15	5	P1-D	22N			P2-D	22N		
A 16	5	P1-E	22N			P2-E	22N		
A 17	3	280	250	7 8	5	280	250	A 11	7A
				A 11					
A 17A	4	SHLD A17	22N			E1	37N		
A 17L		P1-A*	22N			P2-A	22N		
A 17R		P1-Z	22N			P2-Z	22N		
A 18	5	P1-I*	22N			P2-I*	22N		
A 19	5	P1-F	22N			P2-F	22N		
A 20	5	P1-G	22N			P2-G	22N		
A 21	5	P1-H	22N			P2-H	22N		
A 22	3	280	250	7 8	5	280	250	A 11	7A
				A 11					
A 22A	4	SHLD A22	22N			E2	37N		
A 22L		P1-K	22N			P2-K	22N		
A 22R		P1-J	22N			P2-J	22N		

(1) THE STD CONDUCTOR TERMINATION FIGURES ARE PER
(2) DIMENSIONS ARE IN INCHES AND TWO PLACE DECIMALS.

MANNED SPACECRAFT CENTER HOUSTON, TEXAS | SIZE A | 1900974
SCALE - NONE | REV LTR + | SHEET 8 OF 10

MIL 2085 - 4-63 WIR

INCHES 0 1 2
PHOTOGRAPHIC SCALE ONLY

GIB CABLE W18 + 1900974

CONDUCTOR NUMBER	INDIVIDUAL LENGTH ITEM NO.	2		FROM CUT WIRE OR SHIELD STRIP WIRE OR JACKET CIRCUIT POINT	2	TIN	2	TERMINATION SPEC. 1 ITEM NO.	1	NO.	TO CUT WIRE OR SHIELD STRIP WIRE OR JACKET CIRCUIT POINT	2	TIN	2	TERMINATION SPEC 1 ITEM NO.	1	NO.
A 23	3				330		330	7 8	5			330		300	A 11	7A	
								A 11									
A 23A	4			SHLD A23	22N						E2	37N					
A 23L				P1-M	22N						P2-K	22N					
A 23R				P1-L	22N						P2-J	22N					
A 24	3				330		300	7 8	5			330		300	A 11	7A	
								A 11									
A 24A	4			SHLD A24	22N						E2	37N					
A 24L				P1-V	22N						P2-V	22N					
A 24R				P1-U	22N						P2-U	22N					
A 25	3				330		300	7 8	5			330		300	A 11	7A	
								A 11									
A 25A	4			SHLD A25	22N						E2	37N					
A 25L				P1-X	22N						P2-X	22N					
A 25R				P1-W	22N						P2-W	22N					
A 26	4			P1-J#	22N						E1	22N					
A 27	4			E1	22N						E2	22N					

1 THE STD CONDUCTOR TERMINATION FIGURES ARE PER
2 DIMENSIONS ARE IN INCHES AND TWO PLACE DECIMALS.

MANNED SPACECRAFT CENTER HOUSTON, TEXAS | SIZE A | 1900974
SCALE - NONE | REV LTR + | SHEET 9 OF 10

MIL 2085 - 4-63 WIR

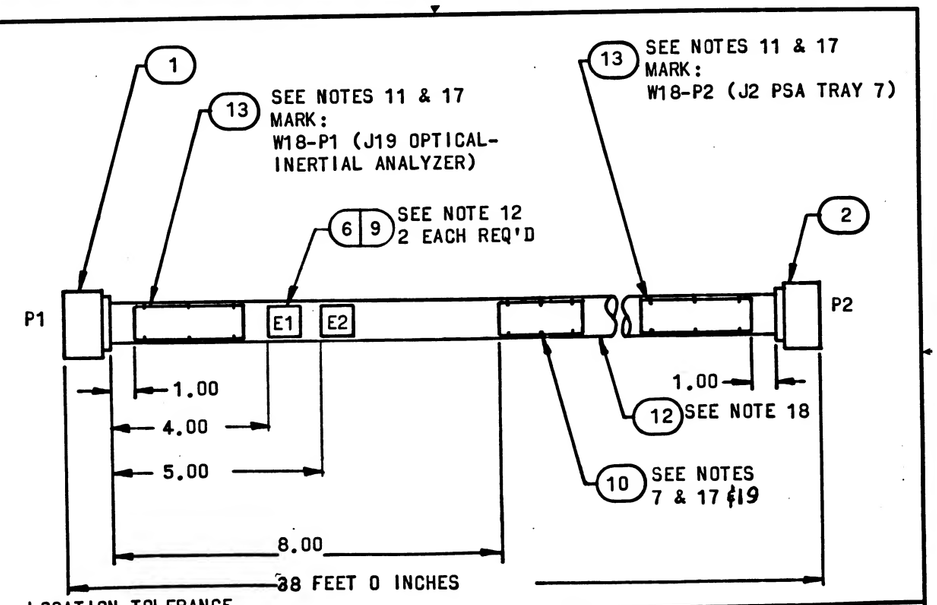

LOCATION TOLERANCE
(EXCEPT LENGTH):
+.50
-.50

MANNED SPACECRAFT CENTER HOUSTON, TEXAS | SIZE A | 1900974
SCALE - NONE | REV LTR + | SHEET 10 OF 10

MIL 2084 4-63

PHOTOGRAPHIC SCALE ONLY
INCHES 0 1 2

APPLICATION		REVISIONS			
NEXT ASSY	USED ON	SYM	DESCRIPTION	DATE	APPROVAL
1901308	900005-011	A	CHANGE IN ACCORDANCE WITH CM-193190	19 FEB 64	

FOR INFORMATION ONLY

CLASS B RELEASE TDR No. 05663 DATE 1/7/64

REV																
SHEET																
REV STATUS	RLY.	A	A	A	A	A	A	A	A	A	A	A	A	A	A	A
OF SHEETS	SHEET	1	2	3	4	5	6	7	8	9	10	11	12	13	14	15	16

AC SPARK PLUG DIVISION, GMC
MILWAUKEE, WISCONSIN

ACSP PN

DRAWN L. Kramer DATE 1 NOV 63
CHECKED 12 NOV 63
APPROVAL 12 NOV 63
APPROVAL L. Gehmen 4/3/64

MANNED SPACECRAFT CENTER
HOUSTON, TEXAS

CABLE INTERCONNECT W11
1SS, OSS, & G&N TESTING

NASA APPROVAL
MIT APPROVAL 7 Jan 64

CONTRACT NAS 9-497

CODE IDENT NO.

SIZE A

1900975

REV A

SCALE NONE

SHEET 1 OF 16

GIC CABLE W11 A 1900975

PENNANT NOTE

GENERAL NOTES

14 A OR T PREFIX IN THE ACCESSORIES ITEM NUMBER COLUMN INDICATES THE HEADING POSITION AWAY FROM TERMINATION OR TOWARD TERMINATION RESPECTIVELY, OF THE WIRE MARKER SLEEVE.

15 THE SUFFIX LETTER OF A CONDUCTOR IDENTIFICATION NUMBER INDICATES CONDUCTOR SHIELDING COLOR, OR MARKING.
L - BLUE WITH BLUE TRACER
R - WHITE WITH RED TRACER
W - WHITE

16 ASSEMBLE CONTACTS IN ALL CONNECTOR GROMMET HOLES.

17 SECURE TO CABLE USING ITEM 17, MARKING TO HEAD AWAY FROM CONNECTOR.

18 SEAL ZIPPER TUBING PER ND1002323

19 SERIALIZE PER ND1002023

20 ITEM 22 FURNISHED WITH ITEM 2

21 ITEM 23 FURNISHED WITH ITEM 1

22 ITEM 19 SHALL BE SHORTENED WHEN NECESSARY TO AVOID INTERFERENCE WITH FERRULES AND MAY BE CUT LENGTHWISE ON ONE SIDE. SELECT ONE OR MORE OF ITEM 19 AS REQUIRED TO FIT.

MANNED SPACECRAFT CENTER HOUSTON, TEXAS | SIZE A | 1900975 | SCALE-NONE | REV LTR A | SHEET 3 OF 16

GIC CABLE W11 A 1900975

PENNANT NOTE

SPECIAL NOTES

1 SEE CONDUCTOR CHART, PENNANT NOTE 16

2 SEE CONDUCTOR CHART, PENNANT NOTE 26.

3 INTERPRET DRAWING IN ACCORDANCE WITH STANDARDS PRESCRIBED BY MIL-D-70327.

4 MARK CONDUCTOR IDENTIFICATION ON SINGLE CONDUCTORS PER ND1002019 OMITTING ALL SUFFIX LETTERS EXCEPT A AND B.

5 SPACING OF CONDUCTOR IDENTIFICATION SHALL BE EVERY 15 INCHES MAX. AND AT EACH TERMINATION.

6 SPIRALLING OF THE MARKING IS ALLOWED.

7 IDENTIFY USING DRAWING NO. AND REVISION LETTER PER MIL-STD-130 (ES-2671, .12 INCH HIGH CHARACTERS BLACK.

8 Y OR N IN TINNED COLUMN INDICATES YES OR NO.

9 A LETTER WITH AN ASTERISK SUFFIX INDICATES A LOWER CASE LETTER.

10 VENDOR ITEM - SEE SPECIFICATION CONTROL DRAWING.

11 MARK IDENTIFICATION BAND WITH REFERENCE DESIGNATION AS NOTED .12 INCH HIGH COLOR BLACK, NOT IMPRESSION STAMPING PER ND1002019.

12 CENTRALIZE.

MARK SLEEVING WITH REFERENCE DESIGNATIONS AS SHOWN .12 INCH HIGH, COLOR BLACK PER ND1002019.

13 MARK SLEEVING OF MULTI-CONDUCTORS WITH THE CONDUCTOR NUMBER .12 INCH HIGH, COLOR BLACK, PER ND1002019 WHEN SLEEVING ITEM NUMBERS FOLLOW AN A OR T IN THE ACCESSORIES ITEM NUMBER FIELD.

MANNED SPACECRAFT CENTER HOUSTON, TEXAS | SIZE A | 1900975 | SCALE-NONE | REV LTR A | SHEET 2 OF 16

GIC CABLE W11 A 1900975

PENNANT NOTE

GENERAL NOTES

TOLERANCE CHART, UNLESS OTHERWISE SPECIFIED ---

APPLICABLE LENGTH FOR WIRE OR CABLE, STRIP WIRE, STRIP JACKET, CUT WIRE OR CUT SHIELD.	TOLERANCE WIRE OR CABLE	STRIP JACKET	WIRE CUT	SHIELD
UNDER 1 INCH	+.06-.00	+.03-.00	+.06-.06	+.06-.06
1 INCH TO 6 INCHES	+.30-.00	+.18-.00	+.25-.25	+.25-.25
6 INCHES TO 6 FEET	+1.00-.00		+.50-.50	+.50-.50
OVER 6 FEET	+2.00-.00			

MANNED SPACECRAFT CENTER HOUSTON, TEXAS | SIZE A | 1900975 | SCALE-NONE | REV LTR A | SHEET 4 OF 16

PENNANT LIST OF MATERIALS

NOTE	ITEM	QTY	PART NO	DESCRIPTION
16	1	1	MS3126F22-55SW	(1897046-551) CONNECTOR PLUG
16	2	1	MS3126F22-55PW	(1897045-551) CONNECTOR PLUG
	3	1	1900975-001	WIRE ND1002181 TYPE 2, CLASS 4, WHT JAKT, 20AWG, WHT/BLU, WHT/RED, 800 FT TOTAL LENGTH
	4	1	1900975-002	WIRE ND1002181 TYPE 1, CLASS 4, WHT JAKT, 20AWG, 380 FT TOTAL LENGTH
	5	1	1900975-003	WIRE ND1002181 TYPE 1, CLASS 1, 20AWG, 38 FT TOTAL LENGTH
	6	1	1900975-004	WIRE ND1002181 TYPE 1, CLASS 1, 22AWG, 32 FT TOTAL LENGTH
10	7	22	1000243-011	FERRULE, ELEC COND
10	8	21	1000242-009	FERRULE, ELEC COND
10	9	10	1000243-005	FERRULE, ELEC COND
10	10	10	1000242-004	FERRULE, ELEC COND
10	11	62	1010490-198	INSULATION, SLEEVING ELEC
	12	1	1900975-005	ZIPPER TUBING, ND1002155, TYPE 1, PLASTIC, FLEXIBLE, 1.25 IN. DIA, 42 FT TOTAL LENGTH
10	13	1	1016128-011	BAND-IDENTIFICATION
10	14	2	1016128-041	BAND-IDENTIFICATION
10	15	5	1016006-002	SPLICE REDUCER
10	16	5	1010490-258	INSULATION-SLEEVING ELEC

MANNED SPACECRAFT CENTER HOUSTON, TEXAS | SIZE A | 1900975
SCALE-NONE | REV LTR A | SHEET 9 OF 16

PENNANT LIST OF MATERIALS

NOTE	ITEM	QTY	PART NO	DESCRIPTION
	17	AR	MIL-T-713	LACING TAPE, TYPE P, CLASS 2 BLACK (ES-2752 NO. 18)
	18		1900975-006	WIRE COAXIAL MIL-C-17/69A RG 188 A/U 38 FT TOTAL LENGTH
22	19	2	1897147-108,-112	CABLE CLAMP SLEEVE
	20	2	1000248-006	FERRULE ELECT. COND
	21	2	1000242-005	FERRULE ELECT. COND
20	22			CONTACT PINS
21	23			CONTACT SOCKETS

MANNED SPACECRAFT CENTER HOUSTON, TEXAS | SIZE A | 1900975
SCALE-NONE | REV LTR A | SHEET 6 OF 16

CONDUCTOR NUMBER	INDIVIDUAL LENGTH	ITEM NO.	FROM CUT WIRE OR SHIELD STRIP WIRE OR JACKET CIRCUIT POINT				TERMINATION SPEC	ITEM NO.				TO CUT WIRE OR SHIELD STRIP WIRE OR JACKET CIRCUIT POINT				TERMINATION SPEC	ITEM NO.			
A	1	3		230	200	7	8	5	A 11				230	200	A	11	7A			
A	1A	6	SHLD A1	25M								E1	25M							
A	1L		P1-D	19M		23						P2-D	19M		22					
A	1R		P1-C	19M		23						P2-C	19M		22					
A	2	3		230	200	7	8	5	A 11				230	200	A	11	7A			
A	2A	6	SHLD A2	25M								E1	25M							
A	2L		P1-F	19M		23						P2-F	19M		22					
A	2R		P1-E	19M		23						P2-E	19M		22					
A	3	3		230	200	7	8	5	A 11				230	200	A	11	7A			
A	3A	6	SHLD A3	25M								E1	25M							
A	3L		P1-H	19M		23						P2-H	19M		22					
A	3R		P1-G	19M		23						P2-G	19M		22					
A	4	3		230	200	7	8	5	A 11				230	200	A	11	7A			
A	4A	6	SHLD A4	25M								E1	25							

1. THE STD CONDUCTOR TERMINATION FIGURES ARE PER
2. DIMENSIONS ARE IN INCHES AND TWO PLACE DECIMALS.

MANNED SPACECRAFT CENTER HOUSTON, TEXAS | SIZE A | 1900975
SCALE-NONE | REV LTR A | SHEET 7 OF 16

CONDUCTOR NUMBER	INDIVIDUAL LENGTH	ITEM NO.	FROM CUT WIRE OR SHIELD STRIP WIRE OR JACKET CIRCUIT POINT				TERMINATION SPEC	ITEM NO.				TO CUT WIRE OR SHIELD STRIP WIRE OR JACKET CIRCUIT POINT				TERMINATION SPEC	ITEM NO.			
A	4L		P1-K	19M		23						P2-K	19		22					
A	4R		P1-J	19M		23						P2-J	19		22					
A	5	3		280	250	7	8	5					280	250	A	11	7A			
						A	11													
A	5A	6	SHLD A5	25M								E1	25M							
A	5L		P1-M	19M		23						P2-M	19M		22					
A	5R		P1-L	19M		23						P2-L	19M		22					
A	6	3		280	250	7	8	5					280	250	A	11	7A			
						A	11													
A	6A	6	SHLD A6	25M								E1	25M							
A	6L		P1-V	19M		23						P2-V	19M		22					
A	6R		P1-U	19M		23						P2-U	19M		22					
A	7	3		280	250	7	8	5					280	250	A	11	7A			
						A	11													
A	7A	6	SHLD A7	25M								E2	25M							
A	7L		P1-FF	19M		23						P2-FF	19M		22					
A	7R		P1-EE	19M		23						P2-EE	19M		22					
A	8	4		280	250	10	9	5					280	250	A	11	7A			

1. THE STD CONDUCTOR TERMINATION FIGURES ARE PER
2. DIMENSIONS ARE IN INCHES AND TWO PLACE DECIMALS.

MANNED SPACECRAFT CENTER HOUSTON, TEXAS | SIZE A | 1900975
SCALE-NONE | REV LTR A | SHEET 8 OF 16

GIC CABLE #11 A 1900975

CONDUCTOR INDIVIDUAL LENGTH NUMBER	ITEM NO. (2)	FROM CUT WIRE OR SHIELD STRIP WIRE OR JACKET CIRCUIT POINT	(2)	T	B	TERMINATION SPEC (1)	ITEM NO.	NO.	TO CUT WIRE OR SHIELD STRIP WIRE OR JACKET CIRCUIT POINT	(2)	T	B	TERMINATION SPEC (1)	ITEM NO.	NO.
							A 11								
A 8A	6	SHLD A8	25N						E2	25N					
A 8W		P1-I*	19N			23			P2-I*	19N			22		
A 9	4		330	300	10	9		5		330	300		A 11		7A
							A 11								
A 9A	6	SHLD A9	25N						E2	25N					
A 9W		P1-J*	19N			23			P2-J*	19N			22		
A 10	4		330	300	10	9		5		330	300		A 11		7A
							A 11								
A 10A	6	SHLD A10	25N						E2	25N					
A 10W		P1-K*	19N			23			P2-K*	19N			22		
A 11	4		330	300	10	9		5		330	300		A 11		7A
							A 11								
A 11A	6	SHLD A11	25N						E2	25N					
A 11W		P1-M*	19N			23			P2-M*	19N			22		
A 12	4		330	300	10	9		5		330	300		A 11		7A
							A 11								
A 12A	6	SHLD A12	25N						E2	25N					

(1) THE STD CONDUCTOR TERMINATION FIGURES ARE PER
(2) DIMENSIONS ARE IN INCHES AND TWO PLACE DECIMALS.

MANNED SPACECRAFT CENTER HOUSTON, TEXAS | SIZE A | 1900975
SCALE - NONE | REV LTR A | SHEET 9 OF 16

GIC CABLE #11 A 1900975

CONDUCTOR INDIVIDUAL LENGTH NUMBER	ITEM NO. (2)	FROM CUT WIRE OR SHIELD STRIP WIRE OR JACKET CIRCUIT POINT	(2)	T	B	TERMINATION SPEC (1)	ITEM NO.	NO.	TO CUT WIRE OR SHIELD STRIP WIRE OR JACKET CIRCUIT POINT	(2)	T	B	TERMINATION SPEC (1)	ITEM NO.	NO.
A 12W		P1-P	19N			23			P2-P	19N			22		
A 13	4		380	350	10	9		5		380	350		A 11		7A
							A 11								
A 13A	6	SHLD A13	25N						E3	25N					
A 13W		P1-N	19N			23			P2-N	19N			22		
A 14	3		380	350	8	9		5		380	350		A 11		7A
							A 11								
A 14A	6	SHLD A14	25N						E3	25N					
A 14L		P1-X	19N			23			P2-X	19N			22		
A 14R		P1-W	19N			23			P2-W	19N			22		
A 15	3		380	350	8	9		5		380	350		A 11		7A
							A 11								
A 15A	6	SHLD A15	25N						E3	25N					
A 15L		P1-Z	19N			23			P2-Z	19N			22		
A 15R		P1-Y	19N			23			P2-Y	19N			22		
A 16	3		380	350	7	8		5		380	350		A 11		7A
							A 11								
A 16A	6	SHLD A16	25N						E3	25N					

(1) THE STD CONDUCTOR TERMINATION FIGURES ARE PER
(2) DIMENSIONS ARE IN INCHES AND TWO PLACE DECIMALS.

MANNED SPACECRAFT CENTER HOUSTON, TEXAS | SIZE A | 1900975
SCALE - NONE | REV LTR A | SHEET 10 OF 16

GIC CABLE #11 A 1900975

CONDUCTOR INDIVIDUAL LENGTH NUMBER	ITEM NO. (2)	FROM CUT WIRE OR SHIELD STRIP WIRE OR JACKET CIRCUIT POINT	(2)	T	B	TERMINATION SPEC (1)	ITEM NO.	NO.	TO CUT WIRE OR SHIELD STRIP WIRE OR JACKET CIRCUIT POINT	(2)	T	B	TERMINATION SPEC (1)	ITEM NO.	NO.
A 16L		P1-B*	19N			23			P2-B*	19N			22		
A 16R		P1-A*	19N			23			P2-A*	19N			22		
A 17	3		430	400	7	8		5		430	400		A 11		7A
							A 11								
A 17A	6	SHLD A17	25N						E3	25N					
A 17L		P1-D*	19N			23			P2-D*	19N			22		
A 17R		P1-C*	19N			23			P2-C*	19N			22		
A 18	3		430	400	7	8		5		430	400		A 11		7A
							A 11								
A 18A	6	SHLD A18	25N						E3	25N					
A 18L		P1-R*	19N			23			P2-R*	19N			22		
A 18R		P1-Q*	19N			23			P2-Q*	19N			22		
A 19	3		430	400	7	8		5		430	400		A 11		7A
							A 11								
A 19A	6	SHLD A19	25N						E4	25N					
A 19L		P1-T*	19N			23			P2-T*	19N			22		
A 19R		P1-S*	19N			23			P2-S*	19N			22		
A 20	3		430	400	7	8		5		430	400		A 11		7A

(1) THE STD CONDUCTOR TERMINATION FIGURES ARE PER
(2) DIMENSIONS ARE IN INCHES AND TWO PLACE DECIMALS.

MANNED SPACECRAFT CENTER HOUSTON, TEXAS | SIZE A | 1900975
SCALE - NONE | REV LTR A | SHEET 11 OF 16

GIC CABLE #11 A 1900975

CONDUCTOR INDIVIDUAL LENGTH NUMBER	ITEM NO. (2)	FROM CUT WIRE OR SHIELD STRIP WIRE OR JACKET CIRCUIT POINT	(2)	T	B	TERMINATION SPEC (1)	ITEM NO.	NO.	TO CUT WIRE OR SHIELD STRIP WIRE OR JACKET CIRCUIT POINT	(2)	T	B	TERMINATION SPEC (1)	ITEM NO.	NO.
							A 11								
A 20A	6	SHLD A20	25N						E4	25N					
A 20L		P1-V*	19N			23			P2-V*	19N			22		
A 20R		P1-U*	19N			23			P2-U*	19N			22		
A 21	3		480	450	7	8		5		480	450		A 11		7A
							A 11								
A 21A	6	SHLD A21	25N						E4	25N					
A 21L		P1-X*	19N			23			P2-X*	19N			22		
A 21R		P1-W*	19N			23			P2-W*	19N			22		
A 22	3		480	450	7	8		5		480	450		A 11		7A
							A 11								
A 22	6	SHLD A22	25N						E4	25N					
A 22L		P1-BB	19N			23			P2-BB	19N			22		
A 22R		P1-AA	19N			23			P2-AA	19N			22		
A 23	4		480	450	9	10		5		480	450		A 11		7A
							A 11								
A 23A	6	SHLD A23	25N						E4	25N					
A 23W		P1-A	19N			23			P2-A	19N			22		

(1) THE STD CONDUCTOR TERMINATION FIGURES ARE PER
(2) DIMENSIONS ARE IN INCHES AND TWO PLACE DECIMALS.

MANNED SPACECRAFT CENTER HOUSTON, TEXAS | SIZE A | 1900975
SCALE - NONE | REV LTR A | SHEET 12 OF 16

GIC CABLE W11 A 1900975

CONDUCTOR NUMBER	INDIVIDUAL LENGTH	ITEM NO. (2)	FROM CUT WIRE OR SHIELD STRIP WIRE OR JACKET CIRCUIT POINT	(2)	T (1)	B (1)	TERMINATION SPEC (1)	ITEM NO.	NO.	TO CUT WIRE OR SHIELD STRIP WIRE OR JACKET CIRCUIT POINT	(2)	T (1)	B (1)	TERMINATION SPEC (1)	ITEM NO.	NO.
A 24		3		48U		45U	7 8		5		48U		45U	A 11		7A
							A 11									
A 24A		6	SHLD A24	25N						E4	25N					
A 24L			P1-S	19N			23			P2-S	19N			22		
A 24R			P1-R	19N			23			P2-R	19N			22		
A 25		4		53U		50U	9 10		5		53U		50U	A 11		7A
							A 11									
A 25A		6	SHLD A25	25N						E5	25N					
A 25W			P1-T	19N			23			P2-T	19N			22		
A 26		3		53U		50U	7 8		5		53U		50U	A 11		7A
							A 11									
A 26A		6	SHLD A26	25N						E5	25N					
A 26L			P1-F*	19N			23			P2-F*	19N			22		
A 26R			P1-E*	19N			23			P2-E*	19N			22		
A 27		3		53U		50U	7 8		5		53U		50U	A 11		7A
							A 11									
A 27A		6	SHLD A27	25N						E5	25N					
A 27L			P1-H*	19N			23			P2-H*	19N			22		

(1) THE STD CONDUCTOR TERMINATION FIGURES ARE PER
(2) DIMENSIONS ARE IN INCHES AND TWO PLACE DECIMALS.

MANNED SPACECRAFT CENTER HOUSTON, TEXAS | SIZE A | 1900975
SCALE - NONE | REV LTR A | SHEET 13 OF 16

GIC CABLE W11 A 1900975

CONDUCTOR NUMBER	INDIVIDUAL LENGTH	ITEM NO. (2)	FROM CUT WIRE OR SHIELD STRIP WIRE OR JACKET CIRCUIT POINT	(2)	T (1)	B (1)	TERMINATION SPEC (1)	ITEM NO.	NO.	TO CUT WIRE OR SHIELD STRIP WIRE OR JACKET CIRCUIT POINT	(2)	T (1)	B (1)	TERMINATION SPEC (1)	ITEM NO.	NO.
A 27R			P1-G*	19N			23			P2-G*	19N			22		
A 28		3		53U		50U	7 8		5		53U		50U	A 11		7A
							A 11									
A 28A		6	SHLD A28	25N						E5	25N					
A 28L			P1-P*	19N			23			P2-P*	19N			22		
A 28R			P1-N*	19N			23			P2-N*	19N			22		
A 29		3		58U		55U	7 8		5		58U		55U	A 11		7A
							A 11									
A 29A		6	SHLD A29	25N						E5	25N					
A 29L			P1-Z*	19N			23			P2-Z*	19N			22		
A 29R			P1-Y*	19N			23			P2-Y*	19N			22		
A 30		4		58U		55U	9 10		5		58U		55U	A 11		7A
							A 11									
A 30A		6	SHLD A30	25N						E5	25N					
A 30W			P1-CC	19N			23			P2-CC	19N			22		
A 31		4		58U		55U	9 10		5		58U		55U	A 11		7A
							A 11									
A 31A		6	SHLD A31	25N						E5	25N					

(1) THE STD CONDUCTOR TERMINATION FIGURES ARE PER
(2) DIMENSIONS ARE IN INCHES AND TWO PLACE DECIMALS.

MANNED SPACECRAFT CENTER HOUSTON, TEXAS | SIZE A | 1900975
SCALE - NONE | REV LTR A | SHEET 14 OF 16

GIC CABLE W11 A 1900975

CONDUCTOR NUMBER	INDIVIDUAL LENGTH	ITEM NO. (2)	FROM CUT WIRE OR SHIELD STRIP WIRE OR JACKET CIRCUIT POINT	(2)	T (1)	B (1)	TERMINATION SPEC (1)	ITEM NO.	NO.	TO CUT WIRE OR SHIELD STRIP WIRE OR JACKET CIRCUIT POINT	(2)	T (1)	B (1)	TERMINATION SPEC (1)	ITEM NO.	NO.
A 31W			P1-DD	19N			23			P2-DD	19N			22		
A 32		5	P1-GG	19N			23			P2-GG	19N			22		
A 33		6	P1-B	19N			23			E1	25N					
A 34		6	E1	25N						E2	25N					
A 35		6	E2	25N						E3	25N					
A 36		6	E3	25N						E4	25N					
A 37		6	E4	25N						E5	25N					
A 38		18		58U		55U	20 21		5		58U		55U	20 21		5
							A 19							A 19		
A 38A		6	SHLD A38	25N						P1-S	19N			23		
A 38B		6	P2-S	19N			22			SHLD A38	25N					
A 38W			P1-R	19N			23			P2-R	19N			22		

(1) THE STD CONDUCTOR TERMINATION FIGURES ARE PER
(2) DIMENSIONS ARE IN INCHES AND TWO PLACE DECIMALS.

MANNED SPACECRAFT CENTER HOUSTON, TEXAS | SIZE A | 1900975
SCALE - NONE | REV LTR A | SHEET 15 OF 16

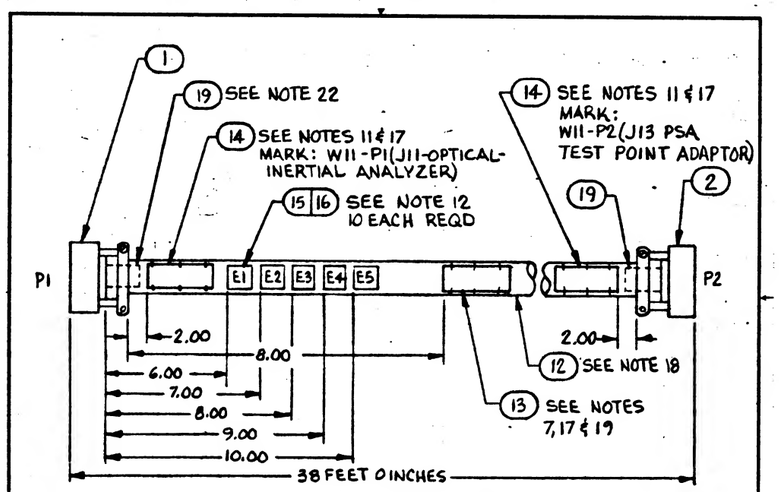

LOCATION TOLERANCE
(EXCEPT LENGTH):
+.05
-.05

MANNED SPACECRAFT CENTER HOUSTON, TEXAS | SIZE A | 1900975
SCALE - NONE | REV LTR A | SHEET 16 OF 16

PENNANT GENERAL NOTES

NOTE

1 SEE CONDUCTOR CHART. PENNANT NOTE 1.

2 SEE CONDUCTOR CHART. PENNANT NOTE 2.

3 INTERPRET DRAWING IN ACCORDANCE WITH STANDARDS PRESCRIBED BY MIL-D-70327.

4 MARK CONDUCTOR IDENTIFICATION ON SINGLE CONDUCTORS PER ND1002019 OMITTING ALL SUFFIX LETTERS EXCEPT A AND B.

5 SPACING OF CONDUCTOR IDENTIFICATION SHALL BE EVERY 15 INCHES MAX. AND AT EACH TERMINATION.

6 SPIRALLING OF THE MARKING IS ALLOWED.

7 IDENTIFY USING DRAWING NO. AND REVISION LETTER PER MIL-STD-130 (ES-267). .12 INCH HIGH CHARACTERS BLACK.

8 Y OR N IN TINNED COLUMN INDICATES YES OR NO.

9 A LETTER WITH AN ASTERISK SUFFIX. INDICATES A LOWER CASE LETTER.

10 VENDOR ITEM - SEE SPECIFICATION CONTROL DRAWING.

11 MARK IDENTIFICATION BAND WITH REFERENCE DESIGNATION AS NOTED .12 INCH HIGH COLOR BLACK. HOT IMPRESSION STAMPING PER ND1002019. CENTRALIZE.

12 MARK SLEEVING WITH REFERENCE DESIGNATIONS AS SHOWN .12 INCH HIGH. COLOR BLACK PER ND1002019.

13 MARK SLEEVING OF MULTI-CONDUCTORS WITH THE CONDUCTOR NUMBER .12 INCH HIGH. COLOR BLACK. PER ND1002019 WHEN SLEEVING ITEM NUMBERS FOLLOW AN A OR T IN THE ACCESSORIES ITEM NUMBER FIELD.

MANNED SPACECRAFT CENTER HOUSTON, TEXAS	SIZE A	1900975	
SCALE - NONE	REV LTR B		SHEET 2 OF 17

PENNANT GENERAL NOTES

NOTE

14 A OR T PREFIX IN THE ACCESSORIES ITEM NUMBER COLUMN INDICATES THE READING POSITION AWAY FROM TERMINATION OR TOWARD TERMINATION RESPECTIVELY. OF THE WIRE MARKER SLEEVE.

15 THE SUFFIX LETTER OF A CONDUCTOR IDENTIFICATION NUMBER INDICATES CONDUCTOR SHIELDING. COLOR. OR MARKING.
- A - FROM END SHIELD
- L - WHITE WITH BLUE TRACER
- R - WHITE WITH RED TRACER
- W - WHITE
- Y - WHITE WITH YELLOW TRACER

16 ASSEMBLE CONTACTS IN ALL CONNECTOR GROMMET HOLES.

17 SECURE TO CABLE USING ITEM 17. MARKING TO READ AWAY FROM CONNECTOR.

18 SEAL ZIPPER TUBING PER ND1002153

19 SERIALIZE PER ND1002029

20 ITEM 22 FURNISHED WITH ITEM 2

21 ITEM 23 FURNISHED WITH ITEM 1

22 ITEM 19 SHALL BE SHORTENED WHEN NECESSARY TO AVOID INTERFERENCE WITH FERRULES AND MAY BE CUT LENGTHWISE ON ONE SIDE. SELECT ONE OR MORE OF ITEM 19 AS REQUIRED TO FIT.

MANNED SPACECRAFT CENTER HOUSTON, TEXAS	SIZE A	1900975	
SCALE - NONE	REV LTR B		SHEET 3 OF 17

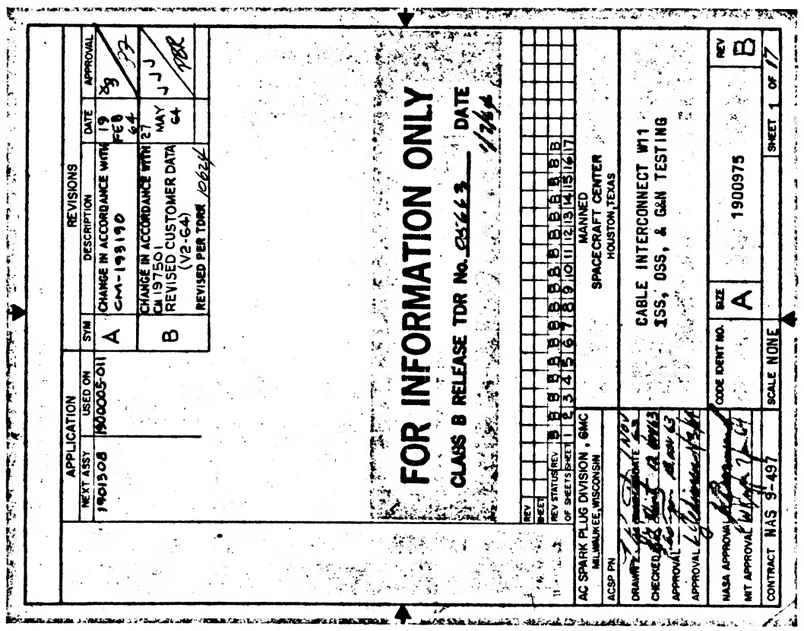

PENNANT GENERAL NOTES

NOTE

TOLERANCE CHART. UNLESS OTHERWISE SPECIFIED ---

APPLICABLE LENGTH FOR WIRE OR CABLE. STRIP WIRE. STRIP JACKET. CUT WIRE OR CUT SHIELD.	TOLERANCE WIRE OR CABLE	STRIP WIRE	STRIP JACKET	CUT WIRE	CUT SHIELD
UNDER 1 INCH	+.06-.00	+.03-.00	+.06-.06	+.06-.06	+.06-.06
1 INCH TO 6 INCHES	+.50-.00	+.06-.00	+.25-.25	+.25-.25	+.25-.25
6 INCHES TO 6 FEET	+1.00-.00		+.50-.50	+.50-.50	+.50-.50
OVER 6 FEET	+2.00-.00				

MANNED SPACECRAFT CENTER HOUSTON, TEXAS	SIZE A	1900975	
SCALE - NONE	REV LTR B		SHEET 4 OF 17

PENNANT LIST OF MATERIALS

NOTE	ITEM	QTY	PART NO	DESCRIPTION
16	1	1	MS3126F22-55SW (1897046-551)	CONNECTOR PLUG
16	2	1	MS3126F22-55PW (1897045-551)	CONNECTOR PLUG
	3	1	1900975-001	WIRE ND1002181 TYPE 2, CLASS 4, WHT JAKT, 20AWG, WHT/BLU, WHT/RED 646 FT TOTAL LENGTH
	4	1	1900975-002	WIRE ND1002181 TYPE 1, CLASS 4, WHT JAKT, 20AWG, 380 FT TOTAL LENGTH
	5	1	1900975-003	WIRE ND1002181 TYPE 1, CLASS 1, 20AWG, 38 FT TOTAL LENGTH
	6	1	1900975-004	WIRE ND1002181 TYPE 1, CLASS 1, 22AWG, 32 FT TOTAL LENGTH
10	7	17	1000243-011	FERRULE, ELEC COND
10	8	17	1000242-009	FERRULE, ELEC COND
10	9	10	1000243-005	FERRULE, ELEC COND
10	10	10	1000242-004	FERRULE, ELEC COND
10	11	50	1010490-198	INSULATION, SLEEVING ELEC
	12	1	1900975-005	ZIPPER TUBING, ND1002155, TYPE 1, PLASTIC, FLEXIBLE, 1.25 IN. DIA, 42 FT TOTAL LENGTH
10	13	1	1016128-011	BAND-IDENTIFICATION
10	14	2	1016128-041	BAND-IDENTIFICATION
10	15	5	1016006-002	SPLICE REDUCER
10	16	5	1010490-258	INSULATION-SLEEVING ELEC

MANNED SPACECRAFT CENTER HOUSTON, TEXAS | SIZE A | 1900975
SCALE-NONE | REV LTR B | SHEET 5 OF 17

PENNANT LIST OF MATERIALS

NOTE	ITEM	QTY	PART NO	DESCRIPTION
	17	AR	MIL-T-713	LACING TAPE, TYPE P, CLASS 2 BLACK (ES-2732 NO. 18)
	18		1900975-006	WIRE COAXIAL MIL-C-17/69A RG 188 A/U 38 FT TOTAL LENGTH
22	19	2	1897147-108,-112	CABLE CLAMP SLEEVE
	20	2	1000243-006	FERRULE ELECT, COND
	21	2	1000242-005	FERRULE ELECT, COND
20	22			CONTACT PINS
21	23			CONTACT SOCKETS
	24	1	1900975-007	WIRE ND1002181, TYPE 3, CLASS 4, WHITE JACKET 20AWG, WHT-BLU, WHT-RED, WHT-YEL, 76 FT TOT. LG
	25	1	1900975-008	ZIPPER TUBING, ND1002155, TYPE 1, PLASTIC, FLEXIBLE .50 DIA 2 FT TOTAL LENGTH
	26	1	MS3127E24-61P (1897055-610)	CONNECTOR
10	27	2	1000243-015	FERRULE ELECT, COND
10	28	2	1000243-016	FERRULE ELECT, COND
10	29	2	1010490-194	INSULATION SLEEVING ELECT.
10	30	2	1010490-196	INSULATION SLEEVING ELECT.
10	31	1	1016282- 24	RUBBER GROMMET

MANNED SPACECRAFT CENTER HOUSTON, TEXAS | SIZE A | 1900975
SCALE-NONE | REV LTR B | SHEET 6 OF 17

CONDUCTOR INDIVIDUAL LENGTH NUMBER	ITEM NO.	2	FROM CUT WIRE OR SHIELD STRIP WIRE OR JACKET CIRCUIT POINT	1	2	3	4	TERMINATION SPEC	1	NO.	TO CUT WIRE OR SHIELD STRIP WIRE OR JACKET CIRCUIT POINT	1	2	3	4	TERMINATION SPEC	1	NO.
A	1	3		230	200	7	8	A 11	5			230	200	A 11		7A		
A	1A	6	SHLD A1	25N							E1	25N						
A	1L		P1-D	19N		23					P2-D	19N		22				
A	1R		P1-C	19N		23					P2-C	19N		22				
A	2	3		230	200	7	8	A 11	5			230	200	A 11		7A		
A	2A	6	SHLD A2	25N							E1	25N						
A	2L		P1-F	19N		23					P2-F	19N		22				
A	2R		P1-E	19N		23					P2-E	19N		22				
A	3	3		230	200	7	8	A 11	5			230	200	A 11		7A		
A	3A	6	SHLD A3	25N							E1	25N						
A	3L		P1-H	19N		23					P2-H	19N		22				
A	3R		P1-G	19N		23					P2-G	19N		22				
A	4	3		230	200	7	8	A 11	5			230	200	A 11		7A		
A	4A	6	SHLD A4	25N							E1	25						

1 THE STD CONDUCTOR TERMINATION FIGURES ARE PER
2 DIMENSIONS ARE IN INCHES AND TWO PLACE DECIMALS.

MANNED SPACECRAFT CENTER HOUSTON TEXAS | SIZE A | 1900975
SCALE-NONE | REV LTR B | SHEET 7 OF 17

CONDUCTOR INDIVIDUAL LENGTH NUMBER	ITEM NO.	2	FROM CUT WIRE OR SHIELD STRIP WIRE OR JACKET CIRCUIT POINT	1	2	3	4	TERMINATION SPEC	1	NO.	TO CUT WIRE OR SHIELD STRIP WIRE OR JACKET CIRCUIT POINT	1	2	3	4	TERMINATION SPEC	1	NO.
A	4L		P1-K	19N		23					P2-K	19		22				
A	4R		P1-J	19N		23					P2-J	19		22				
A	5	3		280	250	7	8	A 11	5			280	250	A 11		7A		
A	5A	6	SHLD A5	25N							E1	25N						
A	5L		P1-M	19N		23					P2-M	19N		22				
A	5R		P1-L	19N		23					P2-L	19N		22				
A	6	3		280	250	7	8	A 11	5			280	250	A 11		7A		
A	6A	6	SHLD A6	25N							E1	25N						
A	6L		P1-V	19N		23					P2-V	19N		22				
A	6R		P1-U	19N		23					P2-U	19N		22				
A	7	3		280	250	7	8	A 11	5			280	250	A 11		7A		
A	7A	6	SHLD A7	25N							E2	25N						
A	7L		P1-FF	19N		23					P2-FF	19N		22				
A	7R		P1-EE	19N		23					P2-EE	19N		22				
A	8	4		280	250	10	9		5			280	250	A 11		7A		

1 THE STD CONDUCTOR TERMINATION FIGURES ARE PER
2 DIMENSIONS ARE IN INCHES AND TWO PLACE DECIMALS.

MANNED SPACECRAFT CENTER HOUSTON, TEXAS | SIZE A | 1900975
SCALE-NONE | REV LTR B | SHEET 8 OF 17

GIC CABLE W11 B 1900975

CONDUCTOR NUMBER	ITEM NO. (2)	FROM CUT WIRE OR SHIELD STRIP WIRE OR JACKET	FROM CIRCUIT POINT (2)	FROM TERMINATION SPEC (1)	FROM ITEM NO.	FROM NO.	TO CUT WIRE OR SHIELD STRIP WIRE OR JACKET	TO CIRCUIT POINT (2)	TO TERMINATION SPEC (1)	TO ITEM NO.	TO NO.
					A 11						
A 8A	6	SHLD A8	25N				E2	25N			
A 8W		P1-I*	19N	23			P2-I*	19N	22		
A 9	4		330	300 10	9	5		330	300 A 11		7A
					A 11						
A 9A	6	SHLD A9	25N				E2	25N			
A 9W		P1-J*	19N	23			P2-J*	19N	22		
A 10	4		330	300 10	9	5		330	300 A 11		7A
					A 11						
A 10A	6	SHLD A10	25N				E2	25N			
A 10W		P1-K*	19N	23			P2-K*	19N	22		
A 11	4		330	300 10	9	5		330	300 A 11		7A
					A 11						
A 11A	6	SHLD A11	25N				E2	25N			
A 11W		P1-M*	19N	23			P2-M*	19N	22		
A 12	4		330	300 10	9	5		330	300 A 11		7A
					A 11						
A 12A	6	SHLD A12	25N				E2	25N			

(1) THE STD CONDUCTOR TERMINATION FIGURES ARE PER
(2) DIMENSIONS ARE IN INCHES AND TWO PLACE DECIMALS.

MANNED SPACECRAFT CENTER HOUSTON, TEXAS | SIZE A | 1900975
SCALE - NONE | REV LTR B | SHEET 9 OF 17

MIL 2001 - 2-83 WIR

GIC CABLE W11 B 1900975

CONDUCTOR NUMBER	ITEM NO. (2)	FROM CUT WIRE OR SHIELD STRIP WIRE OR JACKET	FROM CIRCUIT POINT (2)	FROM TERMINATION SPEC (1)	FROM ITEM NO.	FROM NO.	TO CUT WIRE OR SHIELD STRIP WIRE OR JACKET	TO CIRCUIT POINT (2)	TO TERMINATION SPEC (1)	TO ITEM NO.	TO NO.
A 12W		P1-P	19N	23			P2-P	19N	22		
A 13	4		380	350 10	9	5		380	350 A 11		7A
					A 11						
A 13A	6	SHLD A13	25N				E3	25N			
A 13W		P1-N	19N	23			P2-N	19N	22		
A 14	3		380	350 8	9	5		380	350 A 11		7A
					A 11						
A 14A	6	SHLD A14	25N				E3	25N			
A 14L		P1-X	19N	23			P2-X	19N	22		
A 14R		P1-W	19N	23			P2-W	19N	22		
A 15	3		380	350 8	9	5		380	350 A 11		7A
					A 11						
A 15A	6	SHLD A15	25N				E3	25N			
A 15L		P1-Z	19N	23			P2-Z	19N	22		
A 15R		P1-Y	19N	23			P2-Y	19N	22		
A 16	3		380	350 7	8	5		380	350 A 11		7A
					A 11						
A 16A	6	SHLD A16	25N				E3	25N			

(1) THE STD CONDUCTOR TERMINATION FIGURES ARE PER
(2) DIMENSIONS ARE IN INCHES AND TWO PLACE DECIMALS.

MANNED SPACECRAFT CENTER HOUSTON, TEXAS | SIZE A | 1900975
SCALE - NONE | REV LTR B | SHEET 10 OF 17

MIL 2001 - 2-83 WIR

GIC CABLE W11 B 1900975

CONDUCTOR NUMBER	ITEM NO. (2)	FROM CUT WIRE OR SHIELD STRIP WIRE OR JACKET	FROM CIRCUIT POINT (2)	FROM TERMINATION SPEC (1)	FROM ITEM NO.	FROM NO.	TO CUT WIRE OR SHIELD STRIP WIRE OR JACKET	TO CIRCUIT POINT (2)	TO TERMINATION SPEC (1)	TO ITEM NO.	TO NO.
A 16L		P1-B*	19N	23			P2-B*	19N	22		
A 16R		P1-A*	19N	23			P2-A*	19N	22		
A 17	3		430	400 7	8	5		430	400 A 11		7A
					A 11						
A 17A	6	SHLD A17	25N				E3	25N			
A 17L		P1-D*	19N	23			P2-D*	19N	22		
A 17R		P1-C*	19N	23			P2-C*	19N	22		
A 18	3		430	400 7	8	5		430	400 A 11		7A
					A 11						
A 18A	6	SHLD A18	25N				E3	25N			
A 18L		P1-R*	19N	23			P2-R*	19N	22		
A 18R		P1-Q*	19N	23			P2-Q*	19N	22		
A 19	3		430	400 7	8	5		430	400 A 11		7A
					A 11						
A 19A	6	SHLD A19	25N				E4	25N			
A 19L		P1-T*	19N	23			P2-T*	19N	22		
A 19R		P1-S*	19N	23			P2-S*	19N	22		
A 20	3		430	400 7	8	5		430	400 A 11		7A

(1) THE STD CONDUCTOR TERMINATION FIGURES ARE PER
(2) DIMENSIONS ARE IN INCHES AND TWO PLACE DECIMALS.

MANNED SPACECRAFT CENTER HOUSTON, TEXAS | SIZE A | 1900975
SCALE - NONE | REV LTR B | SHEET 11 OF 17

MIL 2001 - 2-83 WIR

GIC CABLE W11 B 1900975

CONDUCTOR NUMBER	ITEM NO. (2)	FROM CUT WIRE OR SHIELD STRIP WIRE OR JACKET	FROM CIRCUIT POINT (2)	FROM TERMINATION SPEC (1)	FROM ITEM NO.	FROM NO.	TO CUT WIRE OR SHIELD STRIP WIRE OR JACKET	TO CIRCUIT POINT (2)	TO TERMINATION SPEC (1)	TO ITEM NO.	TO NO.
					A 11						
A 20A	6	SHLD A20	25N				E4	25N			
A 20L		P1-V*	19N	23			P2-V*	19N	22		
A 20R		P1-U*	19N	23			P2-U*	19N	22		
A 21	3		480	450 7	8	5		480	450 A 11		7A
					A 11						
A 21A	6	SHLD A21	25N				E4	25N			
A 21L		P1-X*	19N	23			P2-X*	19N	22		
A 21R		P1-W*	19N	23			P2-W*	19N	22		
A 22	3		480	450 7	8	5		480	450 A 11		7A
					A 11						
A 22	6	SHLD A22	25N				E4	25N			
A 22L		P1-BB	19N	23			P2-BB	19N	22		
A 22R		P1-AA	19N	23			P2-AA	19N	22		
A 23	4		480	450 9	10	5		480	450 A 11		7A
					A 11						
A 23A	6	SHLD A23	25N				E4	25N			
A 23W		P1-A	19N	23			P2-A	19N	22		

(1) THE STD CONDUCTOR TERMINATION FIGURES ARE PER
(2) DIMENSIONS ARE IN INCHES AND TWO PLACE DECIMALS.

MANNED SPACECRAFT CENTER HOUSTON, TEXAS | SIZE A | 1900975
SCALE - NONE | REV LTR B | SHEET 12 OF 17

MIL 2001 - 2-83 WIR

GIC CABLE W11 B 1900975

CONDUCTOR INDIVIDUAL LENGTH NUMBER	ITEM NO. (2)	FROM CUT WIRE OR SHIELD STRIP WIRE OR JACKET (1)	CIRCUIT POINT (2)	TERMINATION SPEC (1)	ITEM NO.	NO.	TO CUT WIRE OR SHIELD STRIP WIRE OR JACKET (1)	CIRCUIT POINT (2)	TERMINATION SPEC (1)	ITEM NO.	NO.
A 24	3		480 450	7 8		5		480 450	A 11		7A
				A 11							
A 24A	6	SHLD A24	25N				E4	25N			
A 24L		P1-S	19N	23			P2-S	19N	22		
A 24R		P1-R	19N	23			P2-R	19N	22		
A 25	4		530 500	9 10		5		530 500	A 11		7A
				A 11							
A 25A	6	SHLD A25	25N				E5	25N			
A 25W		P1-T	19N	23			P2-T	19N	22		
A 26		DELETED									
		DELETED									
A 26A		DELETED									
A 26L		DELETED									
A 26R		DELETED									
A 27		DELETED									
		DELETED									
A 27A		DELETED									
A 27L		DELETED									

(1) THE STD CONDUCTOR TERMINATION FIGURES ARE PER
(2) DIMENSIONS ARE IN INCHES AND TWO PLACE DECIMALS.

MANNED SPACECRAFT CENTER HOUSTON, TEXAS | SIZE A | 1900975
SCALE - NONE | REV LTR B | SHEET 13 OF 17

GIC CABLE W11 B 1900975

CONDUCTOR INDIVIDUAL LENGTH NUMBER	ITEM NO. (2)	FROM CUT WIRE OR SHIELD STRIP WIRE OR JACKET (1)	CIRCUIT POINT (2)	TERMINATION SPEC (1)	ITEM NO.	NO.	TO CUT WIRE OR SHIELD STRIP WIRE OR JACKET (1)	CIRCUIT POINT (2)	TERMINATION SPEC (1)	ITEM NO.	NO.
A 27R		DELETED									
A 28		DELETED									
		DELETED									
A 28A		DELETED									
A 28L		DELETED									
A 28R		DELETED									
A 29		DELETED									
		DELETED									
A 29A		DELETED									
A 29L		DELETED									
A 29R		DELETED									
A 30		DELETED									
		DELETED									
A 30A		DELETED									
A 30W		DELETED									
A 31		DELETED									
		DELETED									
A 31A		DELETED									

(1) THE STD CONDUCTOR TERMINATION FIGURES ARE PER
(2) DIMENSIONS ARE IN INCHES AND TWO PLACE DECIMALS.

MANNED SPACECRAFT CENTER HOUSTON, TEXAS | SIZE A | 1900975
SCALE - NONE | REV LTR B | SHEET 14 OF 17

GIC CABLE W11 B 1900975

CONDUCTOR INDIVIDUAL LENGTH NUMBER	ITEM NO. (2)	FROM CUT WIRE OR SHIELD STRIP WIRE OR JACKET (1)	CIRCUIT POINT (2)	TERMINATION SPEC (1)	ITEM NO.	NO.	TO CUT WIRE OR SHIELD STRIP WIRE OR JACKET (1)	CIRCUIT POINT (2)	TERMINATION SPEC (1)	ITEM NO.	NO.
A 31W		DELETED									
A 32	5	P1-GG	19N	23			P2-GG	19N	22		
A 33	6	P1-B	19N	23			E1	25N			
A 34	6	E1	25N				E2	25N			
A 35	6	E2	25N				E3	25N			
A 36	6	E3	25N				E4	25N			
A 37	6	E4	25N				E5	25N			
A 38	18		580 550	20 21		5		580 550	20 21		5
				A 19					A 19		
A 38A	6	SHLD A38	25N				P1-S	19N	23		
A 38B	6	P2-S	19N	22			SHLD A38	25N			
A 38W		P1-R	19N	23			P2-R	19N	22		
A 39	24		480 450	27 28		5		480 450	A 30		7A
				A 29							
A 39A	6	SHLD A39	25N				E6	25N			
A 39L		P3-Y	19N				P2-H*	19N	22		
A 39R		P3-W	19N				P2-G*	19N	22		
A 39Y		P3-Z	19N				P2-F*	19N	22		

(1) THE STD CONDUCTOR TERMINATION FIGURES ARE PER
(2) DIMENSIONS ARE IN INCHES AND TWO PLACE DECIMALS.

MANNED SPACECRAFT CENTER HOUSTON, TEXAS | SIZE A | 1900975
SCALE - NONE | REV LTR B | SHEET 15 OF 17

GIC CABLE W11 B 1900975

CONDUCTOR INDIVIDUAL LENGTH NUMBER	ITEM NO. (2)	FROM CUT WIRE OR SHIELD STRIP WIRE OR JACKET (1)	CIRCUIT POINT (2)	TERMINATION SPEC (1)	ITEM NO.	NO.	TO CUT WIRE OR SHIELD STRIP WIRE OR JACKET (1)	CIRCUIT POINT (2)	TERMINATION SPEC (1)	ITEM NO.	NO.
A 40	24		480 450	27 28		5		480 450	A 30		7A
				A 29							
A 40A	6	SHLD A40	25N				E6	25N			
A 40L		P3-V	19N				P2-P*	19N	22		
A 40R		P3-U	19N				P2-Y*	19N	22		
A 40Y		P3-S	19N				P2-Z*	19N	22		
A 41	3		480 450	7 8		5		480 450	A 11		7A
				A 11							
A 41A	6	SHLD A41	25N				E6	25N			
A 41L		P3-B*	19N				P2-DD	19N	22		
A 41R		P3-C*	19N				P2-CC	19N	22		
A 42	5	E6	25N				P2-N*	19N			
A 43	5	P3-B	19N				E6	25N			

(1) THE STD CONDUCTOR TERMINATION FIGURES ARE PER
(2) DIMENSIONS ARE IN INCHES AND TWO PLACE DECIMALS.

MANNED SPACECRAFT CENTER HOUSTON, TEXAS | SIZE A | 1900975
SCALE - NONE | REV LTR B | SHEET 16 OF 17

1900975

REVISIONS					
SYM	ZONE	DESCRIPTION	CHG NO.	DATE	APPD.

SEE SHEET 1 FOR REVISION RECORD

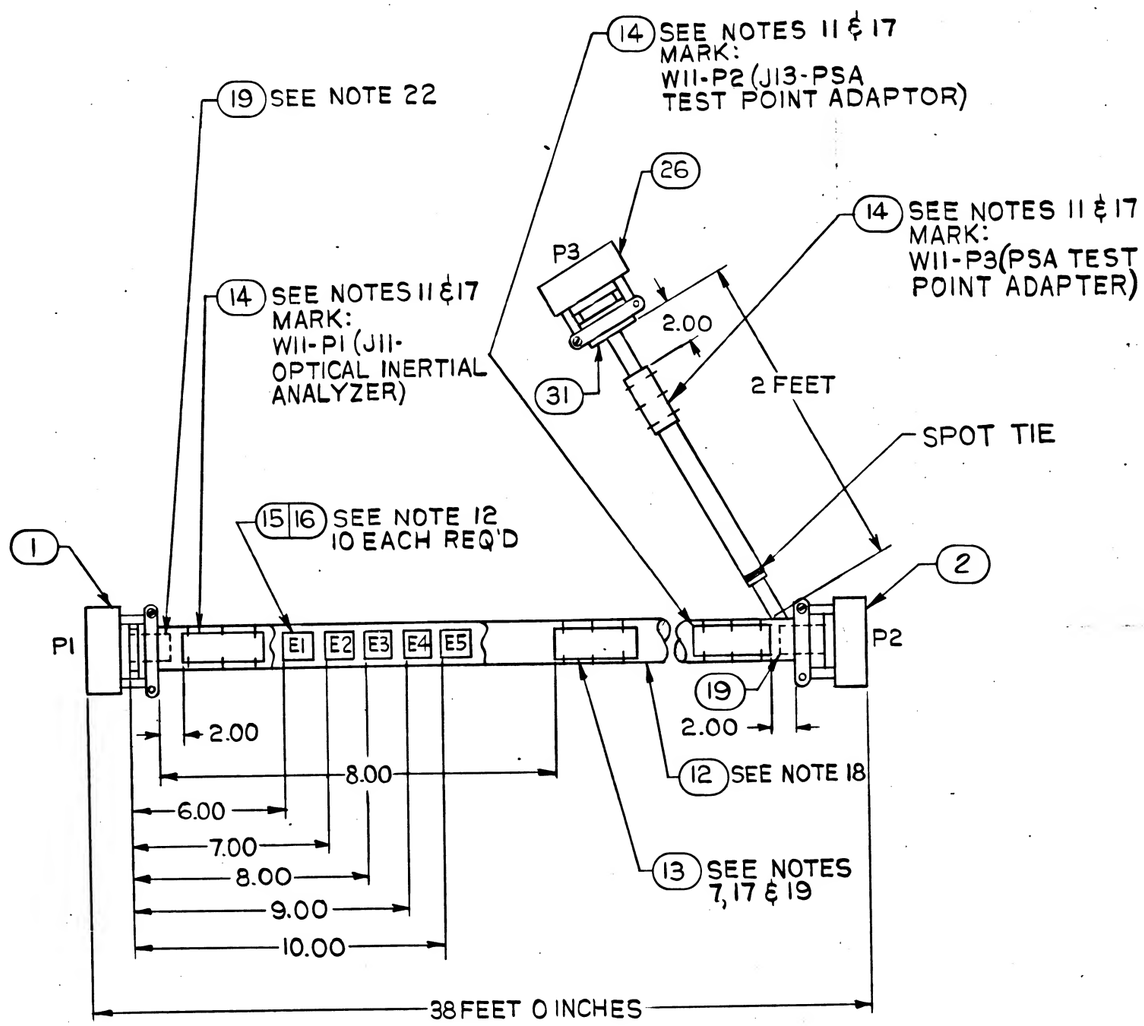

LOCATION TOLERANCE
(EXCEPT LENGTH)
± .05

1901308	1900005-011
NEXT ASSY	USED ON
APPLICATION	

UNLESS OTHERWISE SPECIFIED
DIMENSIONS ARE IN INCHES
TOLERANCES ON

FRACTIONS	DECIMALS	ANGLES
+ −	+ −	+ −
−	−	−

DO NOT SCALE THIS DRAWING

MATERIAL —

CONTRACT NAS 9-497

AC SPARK PLUG DIVISION, GMC
MILWAUKEE, WISCONSIN

ACSP PN

DRAWN T. KOSMATKA DATE 1 NOV 63
CHECKED E.L. HINTZ 12 NOV 63
APPROVAL R.B. LEGION 13 NOV 63
APPROVAL

NASA APPROVAL

MIT APPROVAL

MANNED
SPACECRAFT CENTER
HOUSTON, TEXAS

CABLE INTERCONNECT W11
ISS, OSS & G&N TESTING

CODE IDENT NO. | SIZE C | 1900975

SCALE — | SHEET 17 OF 17

MIL 1077C-P

PENNANT NOTE — GENERAL NOTES

1 SEE CONDUCTOR CHART, PENNANT NOTE 1.

2 SEE CONDUCTOR CHART, PENNANT NOTE 2.

3 INTERPRET DRAWING IN ACCORDANCE WITH STANDARDS PRESCRIBED BY MIL-D-70327.

4 MARK CONDUCTOR IDENTIFICATION ON SINGLE CONDUCTORS PER ND1002019 OMITTING ALL SUFFIX LETTERS EXCEPT A AND B.

5 SPACING OF CONDUCTOR IDENTIFICATION SHALL BE EVERY 15 INCHES MAX. AND AT EACH TERMINATION.

6 SPIRALLING OF THE MARKING IS ALLOWED.

7 IDENTIFY USING DRAWING NO. AND REVISION LETTER PER MIL-STD-130 (ES-267). .12 INCH HIGH CHARACTERS WHITE.

8 Y OR N IN TINNED COLUMN INDICATES YES OR NO.

9 A LETTER WITH AN ASTERISK SUFFIX, INDICATES A LOWER CASE LETTER.

10 VENDOR ITEM - SEE SPECIFICATION CONTROL DRAWING.

11 MARK IDENTIFICATION BAND WITH REFERENCE DESIGNATION AS NOTED .12 INCH HIGH COLOR WHITE, HOT IMPRESSION STAMPING PER ND1002019. CENTRALIZE.

12 MARK SLEEVING WITH REFERENCE DESIGNATIONS AS SHOWN .12 INCH HIGH, COLOR BLACK PER ND1002019.

13 MARK SLEEVING OF MULTI-CONDUCTORS WITH THE CONDUCTOR NUMBER .12 INCH HIGH, COLOR BLACK, PER ND1002019 WHEN SLEEVING ITEM NUMBERS FOLLOW AN A OR T IN THE ACCESSORIES ITEM NUMBER FIELD.

MANNED SPACECRAFT CENTER HOUSTON, TEXAS	SIZE A	1900975	
SCALE - NONE	REV LTR C		SHEET 2 OF 17

MIL 2084 4-63

PENNANT NOTE — GENERAL NOTES

14 A OR T PREFIX IN THE ACCESSORIES ITEM NUMBER COLUMN INDICATES THE READING POSITION AWAY FROM TERMINATION OR TOWARD TERMINATION RESPECTIVELY, OF THE WIRE MARKER SLEEVE.

15 THE SUFFIX LETTER OF A CONDUCTOR IDENTIFICATION NUMBER INDICATES CONDUCTOR SHIELDING, COLOR, OR MARKING.
- A - FROM END SHIELD
- L - WHITE WITH BLUE TRACER
- R - WHITE WITH RED TRACER
- W - WHITE
- Y - WHITE WITH YELLOW TRACER

16 ASSEMBLE CONTACTS IN ALL CONNECTOR GROMMET HOLES.

17 SECURE TO CABLE USING ITEM 17, MARKING TO READ AWAY FROM CONNECTOR.

18 SEAL ZIPPER TUBING PER ND1002153

19 SERIALIZE PER ND1002023

20 ITEM 22 FURNISHED WITH ITEM 2

21 ITEM 23 FURNISHED WITH ITEM 1

22 ITEM 19 SHALL BE SHORTENED WHEN NECESSARY TO AVOID INTERFERENCE WITH FERRULES AND MAY BE CUT LENGTHWISE ON ONE SIDE. SELECT ONE OR MORE OF ITEM 19 AS REQUIRED TO FIT.

MANNED SPACECRAFT CENTER HOUSTON, TEXAS	SIZE A	1900975	
SCALE - NONE	REV LTR B		SHEET 3 OF 17

MIL 2084 4-63

PENNANT NOTE — GENERAL NOTES

TOLERANCE CHART, UNLESS OTHERWISE SPECIFIED ---

APPLICABLE LENGTH FOR WIRE OR CABLE, STRIP WIRE, STRIP JACKET, CUT WIRE OR CUT SHIELD.	TOLERANCE: WIRE OR CABLE	STRIP: WIRE	STRIP: JACKET	CUT: WIRE	CUT: SHIELD
UNDER 1 INCH	+ .06-.00	+.03-.00	+.06-.06	+.06-.06	+.06-.06
1 INCH TO 6 INCHES	+ .50-.00	+.06-.00	+.25-.25	+.25-.25	+.25-.25
6 INCHES TO 6 FEET	+1.00-.00		+.50-.50	+.50-.50	+.50-.50
OVER 6 FEET	+2.00-.00				

MANNED SPACECRAFT CENTER HOUSTON, TEXAS	SIZE A	1900975	
SCALE - NONE	REV LTR B		SHEET 4 OF 17

MIL 2084 4-63

FOR INFORMATION ONLY

CLASS B RELEASE TDR No. 05663 DATE 1/7/64

APPLICATION

NEXT ASSY	USED ON
1901508	1900005-011

REVISIONS

SYM	DESCRIPTION	DATE	APPROVAL
A	CHANGE IN ACCORDANCE WITH CM-193190	19 FEB 64	
B	CHANGE IN ACCORDANCE WITH CM 197501 REVISED CUSTOMER DATA (V2-64) REVISED PER TDR# 106224	27 MAY 64	
C	CHANGE IN ACCORDANCE WITH CM 197756 REVISED PER TDR#112767	9 JUL 64	

REV STATUS	REV	SHEET	1	2	3	4	5	6	7	8	9	10	11	12	13	14	15	16	17
	C		C	C	C	C	C	C	C	C	C	C	C	C	C	C	C	C	C

OF SHEETS 17

AC SPARK PLUG DIVISION, GMC
MILWAUKEE, WISCONSIN

MANNED SPACECRAFT CENTER HOUSTON, TEXAS

ACSP PN

CABLE INTERCONNECT W11
ISS, OSS, & G&N TESTING

DRAWN DATE 1 NOV 63
CHECKED DATE 13 NOV 63
APPROVAL DATE 13 NOV 63
APPROVAL DATE 1 NOV 63

NASA APPROVAL
MIT APPROVAL
CONTRACT NAS 9-491

CODE IDENT NO. SIZE A 1900975 REV C

SCALE NONE SHEET 1 OF 12

INCHES 0 1 2
PROPORTIONAL SCALE ONLY

PENNANT LIST OF MATERIALS

NOTE	ITEM	QTY	PART NO	DESCRIPTION
	17	AR	MIL-T-713	LACING TAPE, TYPE P, CLASS 2 BLACK (ES-2732 NO. 18)
	18		1900975-006	WIRE COAXIAL MIL-C-17/69A RG 188 A/U 38 FT TOTAL LENGTH
22	19	2	1897147-108,-112	CABLE CLAMP SLEEVE
	20	2	1000243-006	FERRULE ELECT. COND
	21	2	1000242-005	FERRULE ELECT. COND
20	22			CONTACT PINS
21	23			CONTACT SOCKETS
	24	1	1900975-007	WIRE ND1002181, TYPE 3, CLASS 4, WHITE JACKET 20AWG, WHT-BLU, WHT-RED, WHT-YEL, 76 FT TOT. LG
	25	1	1900975-008	ZIPPER TUBING, ND1002155, TYPE 1, PLASTIC, FLEXIBLE .50 DIA 2 FT TOTAL LENGTH
	26	1	MS3127E24-61P (1897055-610)	CONNECTOR
10	27	2	1000243-015	FERRULE ELECT. COND
10	28	2	1000243-016	FERRULE ELECT. COND
10	29	2	1010490-194	INSULATION SLEEVING ELECT.
10	30	2	1010490-196	INSULATION SLEEVING ELECT.
10	31	1	1016282- 24	RUBBER GROMMET

MANNED SPACECRAFT CENTER HOUSTON, TEXAS | SIZE A | 1900975
SCALE-NONE | REV LTR B | SHEET 6 OF 17

MIL 2084 4-63

CONDUCTOR NUMBER	INDIVIDUAL LENGTH ITEM NO. [2]	FROM CUT WIRE OR SHIELD STRIP WIRE OR JACKET CIRCUIT POINT [2]	TIN [2]	TERMINATION SPEC. [1] ITEM NO.	NO.	TO CUT WIRE OR SHIELD STRIP WIRE OR JACKET CIRCUIT POINT [2]	TIN [2]	TERMINATION SPEC [1] ITEM NO.	NO.
A 1	3		230 200	7 8 5			230 200	A 11 7A	
				A 11					
A 1A	6	SHLD A1	25N			E1	25N		
A 1L		P1-D	19N	23		P2-D	19N	22	
A 1R		P1-C	19N	23		P2-C	19N	22	
A 2	3		230 200	7 8 5			230 200	A 11 7A	
				A 11					
A 2A	6	SHLD A2	25N			E1	25N		
A 2L		P1-F	19N	23		P2-F	19N	22	
A 2R		P1-E	19N	23		P2-E	19N	22	
A 3	3		230 200	7 8 5			230 200	A 11 7A	
				A 11					
A 3A	6	SHLD A3	25N			E1	25N		
A 3L		P1-H	19N	23		P2-H	19N	22	
A 3R		P1-G	19N	23		P2-G	19N	22	
A 4	3		230 200	7 8 5			230 200	A 11 7A	
				A 11					
A 4A	6	SHLD A4	25N			E1	25		

[1] THE STD CONDUCTOR TERMINATION FIGURES ARE PER
[2] DIMENSIONS ARE IN INCHES AND TWO PLACE DECIMALS.

MANNED SPACECRAFT CENTER HOUSTON, TEXAS | SIZE A | 1900975
SCALE-NONE | REV LTR B | SHEET 7 OF 17

MIL 2088 - 4-63 WIR

PENNANT LIST OF MATERIALS

NOTE	ITEM	QTY	PART NO	DESCRIPTION
16	1	1	MS3126F22-55SW (1897046-551)	CONNECTOR PLUG
16	2	1	MS3126F22-55PW (1897045-551)	CONNECTOR PLUG
	3	1	1900975-001	WIRE ND1002181 TYPE 2, CLASS 4, WHT JAKT, 20AWG, WHT/BLU, WHT/RED 646 FT TOTAL LENGTH
	4	1	1900975-002	WIRE ND1002181 TYPE 1, CLASS 4, WHT JAKT, 20AWG, 380 FT TOTAL LENGTH
	5	1	1900975-003	WIRE ND1002181 TYPE 1, CLASS 1, 20AWG, 38 FT TOTAL LENGTH
	6	1	1900975-004	WIRE ND1002181 TYPE 1, CLASS 1, 22AWG, 32 FT TOTAL LENGTH
10	7	17	1000243-011	FERRULE, ELEC COND
10	8	17	1000242-009	FERRULE, ELEC COND
10	9	10	1000243-005	FERRULE, ELEC COND
10	10	10	1000242-004	FERRULE, ELEC COND
10	11	50	1010490-198	INSULATION, SLEEVING ELEC
	12	1	1900975-005	ZIPPER TUBING, ND1002155, TYPE 1, PLASTIC, FLEXIBLE, 1.25 IN. DIA, 42 FT TOTAL LENGTH
10	13	1	1016128-011	BAND-IDENTIFICATION
10	14	2	1016128-041	BAND-IDENTIFICATION
10	15	5	1016006-002	SPLICE REDUCER
10	16	5	1010490-258	INSULATION-SLEEVING ELEC

MANNED SPACECRAFT CENTER HOUSTON, TEXAS | SIZE A | 1900975
SCALE-NONE | REV LTR B | SHEET 5 OF 17

MIL 2084 4-63

CONDUCTOR NUMBER	INDIVIDUAL LENGTH ITEM NO. [2]	FROM CUT WIRE OR SHIELD STRIP WIRE OR JACKET CIRCUIT POINT [2]	TIN [2]	TERMINATION SPEC. [1] ITEM NO.	NO.	TO CUT WIRE OR SHIELD STRIP WIRE OR JACKET CIRCUIT POINT [2]	TIN [2]	TERMINATION SPEC [1] ITEM NO.	NO.
A 4L		P1-K	19N	23		P2-K	19	22	
A 4R		P1-J	19N	23		P2-J	19	22	
A 5	3		280 250	7 8 5			280 250	A 11 7A	
				A 11					
A 5A	6	SHLD A5	25N			E1	25N		
A 5L		P1-M	19N	23		P2-M	19N	22	
A 5R		P1-L	19N	23		P2-L	19N	22	
A 6	3		280 250	7 8 5			280 250	A 11 7A	
				A 11					
A 6A	6	SHLD A6	25N			E1	25N		
A 6L		P1-V	19N	23		P2-V	19N	22	
A 6R		P1-U	19N	23		P2-U	19N	22	
A 7	3		280 250	7 8 5			280 250	A 11 7A	
				A 11					
A 7A	6	SHLD A7	25N			E2	25N		
A 7L		P1-FF	19N	23		P2-FF	19N	22	
A 7R		P1-EE	19N	23		P2-EE	19N	22	
A 8	4		280 250	10 9 5			280 250	A 11 7A	

[1] THE STD CONDUCTOR TERMINATION FIGURES ARE PER
[2] DIMENSIONS ARE IN INCHES AND TWO PLACE DECIMALS.

MANNED SPACECRAFT CENTER HOUSTON, TEXAS | SIZE A | 1900975
SCALE-NONE | REV LTR B | SHEET 8 OF 17

MIL 2088 - 4-63 WIR

INCHES
PHOTOGRAPHIC SCALE ONLY

GIC CABLE W11 B 1900975

CONDUCTOR NUMBER	INDIVIDUAL LENGTH ITEM NO.	[2]	FROM CUT WIRE OR SHIELD STRIP WIRE OR JACKET CIRCUIT POINT	[2]	TIN	[2]	TERMINATION SPEC. [1] ITEM NO.			NO.	TO CUT WIRE OR SHIELD STRIP WIRE OR JACKET CIRCUIT POINT	[2]	TIN	[2]	TERMINATION SPEC [1] ITEM NO.			NO.
A 12W			P1-P		19N		23				P2-P		19N		22			
A 13	4			380		350	10	9	5			380		350	A 11		7A	
							A 11											
A 13A	6		SHLD A13		25N						E3		25N					
A 13W			P1-N		19N		23				P2-N		19N		22			
A 14	3			380		350	8	9	5			380		350	A 11		7A	
							A 11											
A 14A	6		SHLD A14		25N						E3		25N					
A 14L			P1-X		19N		23				P2-X		19N		22			
A 14R			P1-W		19N		23				P2-W		19N		22			
A 15	3			380		350	8	9	5			380		350	A 11		7A	
							A 11											
A 15A	6		SHLD A15		25N						E3		25N					
A 15L			P1-Z		19N		23				P2-Z		19N		22			
A 15R			P1-Y		19N		23				P2-Y		19N		22			
A 16	3			380		350	7	8	5			380		350	A 11		7A	
							A 11											
A 16A	6		SHLD A16		25N						E3		25N					

[1] THE STD CONDUCTOR TERMINATION FIGURES ARE PER
[2] DIMENSIONS ARE IN INCHES AND TWO PLACE DECIMALS.

MANNED SPACECRAFT CENTER HOUSTON, TEXAS | SIZE A | 1900975
SCALE - NONE | REV LTR B | SHEET 10 OF 17

MIL 2089 - 4-63 WIR

GIC CABLE W11 B 1900975

CONDUCTOR NUMBER	INDIVIDUAL LENGTH ITEM NO.	[2]	FROM CUT WIRE OR SHIELD STRIP WIRE OR JACKET CIRCUIT POINT	[2]	TIN	[2]	TERMINATION SPEC. [1] ITEM NO.			NO.	TO CUT WIRE OR SHIELD STRIP WIRE OR JACKET CIRCUIT POINT	[2]	TIN	[2]	TERMINATION SPEC [1] ITEM NO.			NO.
							A 11											
A 8A	6		SHLD A8		25N						E2		25N					
A 8W			P1-I*		19N		23				P2-I*		19N		22			
A 9	4			330		300	10	9	5			330		300	A 11		7A	
							A 11											
A 9A	6		SHLD A9		25N						E2		25N					
A 9W			P1-J*		19N		23				P2-J*		19N		22			
A 10	4			330		300	10	9	5			330		300	A 11		7A	
							A 11											
A 10A	6		SHLD A10		25N						E2		25N					
A 10W			P1-K*		19N		23				P2-K*		19N		22			
A 11	4			330		300	10	9	5			330		300	A 11		7A	
							A 11											
A 11A	6		SHLD A11		25N						E2		25N					
A 11W			P1-M*		19N		23				P2-M*		19N		22			
A 12	4			330		300	10	9	5			330		300	A 11		7A	
							A 11											
A 12A	6		SHLD A12		25N						E2		25N					

[1] THE STD CONDUCTOR TERMINATION FIGURES ARE PER
[2] DIMENSIONS ARE IN INCHES AND TWO PLACE DECIMALS.

MANNED SPACECRAFT CENTER HOUSTON, TEXAS | SIZE A | 1900975
SCALE - NONE | REV LTR B | SHEET 9 OF 17

MIL 2089 - 4-63 WIR

GIC CABLE W11 B 1900975

CONDUCTOR NUMBER	INDIVIDUAL LENGTH ITEM NO.	[2]	FROM CUT WIRE OR SHIELD STRIP WIRE OR JACKET CIRCUIT POINT	[2]	TIN	[2]	TERMINATION SPEC. [1] ITEM NO.			NO.	TO CUT WIRE OR SHIELD STRIP WIRE OR JACKET CIRCUIT POINT	[2]	TIN	[2]	TERMINATION SPEC [1] ITEM NO.			NO.
A 16L			P1-B*		19N		23				P2-B*		19N		22			
A 16R			P1-A*		19N		23				P2-A*		19N		22			
A 17	3			430		400	7	8	5			430		400	A 11		7A	
							A 11											
A 17A	6		SHLD A17		25N						E3		25N					
A 17L			P1-D*		19N		23				P2-D*		19N		22			
A 17R			P1-C*		19N		23				P2-C*		19N		22			
A 18	3			430		400	7	8	5			430		400	A 11		7A	
							A 11											
A 18A	6		SHLD A18		25N						E3		25N					
A 18L			P1-R*		19N		23				P2-R*		19N		22			
A 18R			P1-Q*		19N		23				P2-Q*		19N		22			
A 19	3			430		400	7	8	5			430		400	A 11		7A	
							A 11											
A 19A	6		SHLD A19		25N						E4		25N					
A 19L			P1-T*		19N		23				P2-T*		19N		22			
A 19R			P1-S*		19N		23				P2-S*		19N		22			
A 20	3			430		400	7	8	5			430		400	A 11		7A	

[1] THE STD CONDUCTOR TERMINATION FIGURES ARE PER
[2] DIMENSIONS ARE IN INCHES AND TWO PLACE DECIMALS.

MANNED SPACECRAFT CENTER HOUSTON, TEXAS | SIZE A | 1900975
SCALE - NONE | REV LTR B | SHEET 11 OF 17

MIL 2089 - 4-63 WIR

GIC CABLE W11 B 1900975

CONDUCTOR NUMBER	INDIVIDUAL LENGTH ITEM NO.	[2]	FROM CUT WIRE OR SHIELD STRIP WIRE OR JACKET CIRCUIT POINT	[2]	TIN	[2]	TERMINATION SPEC. [1] ITEM NO.			NO.	TO CUT WIRE OR SHIELD STRIP WIRE OR JACKET CIRCUIT POINT	[2]	TIN	[2]	TERMINATION SPEC [1] ITEM NO.			NO.
							A 11											
A 20A	6		SHLD A20		25N						E4		25N					
A 20L			P1-V*		19N		23				P2-V*		19N		22			
A 20R			P1-U*		19N		23				P2-U*		19N		22			
A 21	3			480		450	7	8	5			480		450	A 11		7A	
							A 11											
A 21A	6		SHLD A21		25N						E4		25N					
A 21L			P1-X*		19N		23				P2-X*		19N		22			
A 21R			P1-W*		19N		23				P2-W*		19N		22			
A 22	3			480		450	7	8	5			480		450	A 11		7A	
							A 11											
A 22	6		SHLD A22		25N						E4		25N					
A 22L			P1-BB		19N		23				P2-BB		19N		22			
A 22R			P1-AA		19N		23				P2-AA		19N		22			
A 23	4			480		450	9	10	5			480		450	A 11		7A	
							A 11											
A 23A	6		SHLD A23		25N						E4		25N					
A 23W			P1-A		19N		23				P2-A		19N		22			

[1] THE STD CONDUCTOR TERMINATION FIGURES ARE PER
[2] DIMENSIONS ARE IN INCHES AND TWO PLACE DECIMALS.

MANNED SPACECRAFT CENTER HOUSTON, TEXAS | SIZE A | 1900975
SCALE - NONE | REV LTR B | SHEET 12 OF 17

MIL 2089 - 4-63 WIR

INCHES
1 0 1 2
REDUCING TO SCALE

GIC CABLE W11 B 1900975

CONDUCTOR NUMBER	INDIVIDUAL LENGTH ITEM NO.	2	FROM CUT WIRE OR SHIELD STRIP WIRE OR JACKET CIRCUIT POINT	2	TIN	2	TERMINATION SPEC. 1	ITEM NO.	NO.	TO CUT WIRE OR SHIELD STRIP WIRE OR JACKET CIRCUIT POINT	2	TIN	2	TERMINATION SPEC 1	ITEM NO.	NO.
A 27R			DELETED													
A 28			DELETED													
			DELETED													
A 28A			DELETED													
A 28L			DELETED													
A 28R			DELETED													
A 29			DELETED													
			DELETED													
A 29A			DELETED													
A 29L			DELETED													
A 29R			DELETED													
A 30			DELETED													
			DELETED													
A 30A			DELETED													
A 30W			DELETED													
A 31			DELETED													
			DELETED													
A 31A			DELETED													

1 THE STD CONDUCTOR TERMINATION FIGURES ARE PER
2 DIMENSIONS ARE IN INCHES AND TWO PLACE DECIMALS.

MANNED SPACECRAFT CENTER HOUSTON, TEXAS | SIZE A | 1900975
SCALE - NONE | REV LTR B | SHEET 14 OF 17

MIL 2089 - 4-63 WIR

GIC CABLE W11 B 1900975

CONDUCTOR NUMBER	INDIVIDUAL LENGTH ITEM NO.	2	FROM CUT WIRE OR SHIELD STRIP WIRE OR JACKET CIRCUIT POINT	2	TIN	2	TERMINATION SPEC. 1	ITEM NO.	NO.	TO CUT WIRE OR SHIELD STRIP WIRE OR JACKET CIRCUIT POINT	2	TIN	2	TERMINATION SPEC 1	ITEM NO.	NO.
A 31W			DELETED													
A 32	5		P1-GG		19N		23			P2-GG		19N		22		
A 33	6		P1-B		19N		23			E1		25N				
A 34	6		E1		25N					E2		25N				
A 35	6		E2		25N					E3		25N				
A 36	6		E3		25N					E4		25N				
A 37	6		E4		25N					E5		25N				
A 38	18			580	550	20	21	5			580	550	20	21	5	
						A	19						A	19		
A 38A	6		SHLD A38		25N					P1-S		19N		23		
A 38B	6		P2-S		19N		22			SHLD A38		25N				
A 38W			P1-R		19N		23			P2-R		19N		22		
A 39	24			480	450	27	28	5			480	450	A	30	7A	
						A	29									
A 39A	6		SHLD A39		25N					E6		25N				
A 39L			P3-Y		19N					P2-H*		19N		22		
A 39R			P3-W		19N					P2-G*		19N		22		
A 39Y			P3-Z		19N					P2-F*		19N		22		

1 THE STD CONDUCTOR TERMINATION FIGURES ARE PER
2 DIMENSIONS ARE IN INCHES AND TWO PLACE DECIMALS.

MANNED SPACECRAFT CENTER HOUSTON, TEXAS | SIZE A | 1900975
SCALE - NONE | REV LTR B | SHEET 15 OF 17

MIL 2089 - 4-63 WIR

GIC CABLE W11 C 1900975

CONDUCTOR NUMBER	INDIVIDUAL LENGTH ITEM NO.	2	FROM CUT WIRE OR SHIELD STRIP WIRE OR JACKET CIRCUIT POINT	2	TIN	2	TERMINATION SPEC. 1	ITEM NO.	NO.	TO CUT WIRE OR SHIELD STRIP WIRE OR JACKET CIRCUIT POINT	2	TIN	2	TERMINATION SPEC 1	ITEM NO.	NO.
A 24			DELETED													
			DELETED													
A 24A			DELETED													
A 24L			DELETED													
A 24R			DELETED													
A 25	4			530	500	9	10	5			530	500	A	11	7A	
						A	11									
A 25A	6		SHLD A25		25N					E5		25N				
A 25W			P1-T		19N		23			P2-T		19N		22		
A 26			DELETED													
			DELETED													
A 26A			DELETED													
A 26L			DELETED													
A 26R			DELETED													
A 27			DELETED													
			DELETED													
A 27A			DELETED													
A 27L			DELETED													

1 THE STD CONDUCTOR TERMINATION FIGURES ARE PER
2 DIMENSIONS ARE IN INCHES AND TWO PLACE DECIMALS.

MANNED SPACECRAFT CENTER HOUSTON, TEXAS | SIZE A | 1900975
SCALE - NONE | REV LTR C | SHEET 13 OF 17

MIL 2089 - 4-63 WIR

GIC CABLE W11 B 1900975

CONDUCTOR NUMBER	INDIVIDUAL LENGTH ITEM NO.	2	FROM CUT WIRE OR SHIELD STRIP WIRE OR JACKET CIRCUIT POINT	2	TIN	2	TERMINATION SPEC. 1	ITEM NO.	NO.	TO CUT WIRE OR SHIELD STRIP WIRE OR JACKET CIRCUIT POINT	2	TIN	2	TERMINATION SPEC 1	ITEM NO.	NO.
A 40	24			480	450	27	28	5			480	450	A	30	7A	
						A	29									
A 40A	6		SHLD A40		25N					E6		25N				
A 40L			P3-V		19N					P2-P*		19N		22		
A 40R			P3-U		19N					P2-Y*		19N		22		
A 40Y			P3-S		19N					P2-Z*		19N		22		
A 41	3			480	450	7	8	5			480	450	A	11	7A	
						A	11									
A 41A	6		SHLD A41		25N					E6		25N				
A 41L			P3-B*		19N					P2-DD		19N		22		
A 41R			P3-C*		19N					P2-CC		19N		22		
A 42	5		E6		25N					P2-N*		19N				
A 43	5		P3-B		19N					E6		25N				

1 THE STD CONDUCTOR TERMINATION FIGURES ARE PER
2 DIMENSIONS ARE IN INCHES AND TWO PLACE DECIMALS.

MANNED SPACECRAFT CENTER HOUSTON, TEXAS | SIZE A | 1900975
SCALE - NONE | REV LTR B | SHEET 16 OF 17

MIL 2089 - 4-63 WIR

INCHES

1900975

REVISIONS					
SYM	ZONE	DESCRIPTION	CHG NO.	DATE	APPD.
(M)		SEE SHEET 1 FOR REVISION RECORD			

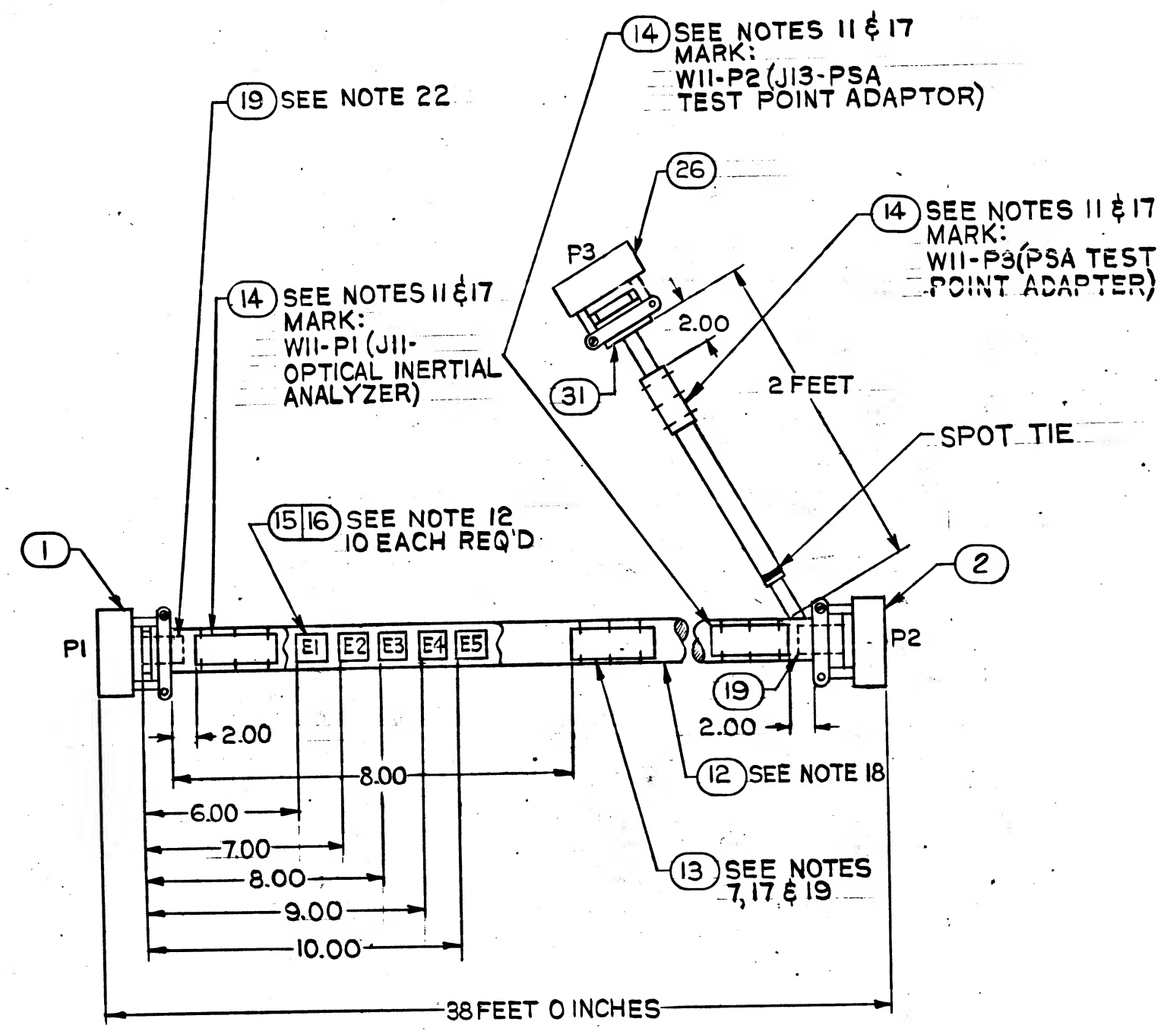

LOCATION TOLERANCE
(EXCEPT LENGTH)
± .05

1901308	1900005-011
NEXT ASSY	USED ON
APPLICATION	

UNLESS OTHERWISE SPECIFIED
DIMENSIONS ARE IN INCHES
TOLERANCES ON

FRACTIONS	DECIMALS	ANGLES
+ −	+ −	+ −
−	−	−

DO NOT SCALE THIS DRAWING

MATERIAL —

CONTRACT NAS 9-497

AC SPARK PLUG DIVISION, GMC
MILWAUKEE, WISCONSIN

ACSP PN

DRAWN T. KOSMATKA DATE 1 NOV 63
CHECKED E.L. HINTZ 12 NOV 63
APPROVAL R.B. LEGION 13 NOV 63
APPROVAL Wdelmadt 9/15/64
NASA APPROVAL A.C. Mitchell 9/15/64
MIT APPROVAL D. Walzel 9/15/64

MANNED
SPACECRAFT CENTER
HOUSTON, TEXAS

CABLE INTERCONNECT W11
ISS, OSS & G&N TESTING

CODE IDENT NO. | SIZE C | 1900975

SCALE — | SHEET 17 OF 17

MIL 1077C-P

INCHES
0 1 2
PHOTOGRAPHIC SCALE ONLY

APPLICATION		REVISIONS			
NEXT ASSY	USED ON	SYM	DESCRIPTION	DATE	APPROVAL
1901308	1900005-011	A	CHANGE IN ACCORDANCE WITH CM-193190	19 FEB 64	
	(M)	B	CHANGE IN ACCORDANCE WITH CM 197501 REVISED CUSTOMER DATA (V2-64) REVISED PER TDRR 10624	27 MAY 64	J J J TDR
	(M)	C	CHANGE IN ACCORDANCE WITH CM 197756 REVISED PER TDRR 11727	9 JUL 64	HTO
		D	REVISED PER TDRR 12382	26 SEP 64	EL

FOR INFORMATION ONLY

CLASS B RELEASE TDR No. 05663 DATE 1/7/64

REV																								
SHEET																								
REV STATUS	RE.	D	C	B	B	D	D	B	B	B	B	B	D	C	B	B	B	D						
OF SHEETS	SHEET	1	2	3	4	5	6	7	8	9	10	11	12	13	14	15	16	17						

AC SPARK PLUG DIVISION, GMC
MILWAUKEE, WISCONSIN

ACSP PN

DRAWN DATE 1 NOV 63
CHECKED 12 NOV 63
APPROVAL 13 NOV 63
APPROVAL 1/3/64

NASA APPROVAL
MIT APPROVAL 7 Jan 64

CONTRACT NAS 9-497

MANNED
SPACECRAFT CENTER
HOUSTON, TEXAS

CABLE INTERCONNECT W11
ISS, OSS, & G&N TESTING

CODE IDENT NO.	SIZE		REV
	A	1900975	D

SCALE NONE SHEET 1 OF 17

PENNANT NOTE — GENERAL NOTES

1 SEE CONDUCTOR CHART. PENNANT NOTE 1.

2 SEE CONDUCTOR CHART. PENNANT NOTE 2.

3 INTERPRET DRAWING IN ACCORDANCE WITH STANDARDS PRESCRIBED BY MIL-D-70327.

4 MARK CONDUCTOR IDENTIFICATION ON SINGLE CONDUCTORS PER ND1002019 OMITTING ALL SUFFIX LETTERS EXCEPT A AND B.

5 SPACING OF CONDUCTOR IDENTIFICATION SHALL BE EVERY 15 INCHES MAX. AND AT EACH TERMINATION.

6 SPIRALLING OF THE MARKING IS ALLOWED.

7 IDENTIFY USING DRAWING NO. AND REVISION LETTER PER MIL-STD-130 (ES-267). .12 INCH HIGH CHARACTERS WHITE.

8 Y OR N IN TINNED COLUMN INDICATES YES OR NO.

9 A LETTER WITH AN ASTERISK SUFFIX. INDICATES A LOWER CASE LETTER.

10 VENDOR ITEM - SEE SPECIFICATION CONTROL DRAWING.

11 MARK IDENTIFICATION BAND WITH REFERENCE DESIGNATION AS NOTED .12 INCH HIGH COLOR WHITE. HOT IMPRESSION STAMPING PER ND1002019. CENTRALIZE.

12 MARK SLEEVING WITH REFERENCE DESIGNATIONS AS SHOWN .12 INCH HIGH. COLOR BLACK PER ND1002019.

13 MARK SLEEVING OF MULTI-CONDUCTORS WITH THE CONDUCTOR NUMBER .12 INCH HIGH. COLOR BLACK. PER ND1002019 WHEN SLEEVING ITEM NUMBERS FOLLOW AN A OR T IN THE ACCESSORIES ITEM NUMBER FIELD.

PENNANT NOTE — GENERAL NOTES

14 A OR T PREFIX IN THE ACCESSORIES ITEM NUMBER COLUMN INDICATES THE READING POSITION AWAY FROM TERMINATION OR TOWARD TERMINATION RESPECTIVELY. OF THE WIRE MARKER SLEEVE.

15 THE SUFFIX LETTER OF A CONDUCTOR IDENTIFICATION NUMBER INDICATES CONDUCTOR SHIELDING. COLOR. OR MARKING.
- A - FROM END SHIELD
- L - WHITE WITH BLUE TRACER
- R - WHITE WITH RED TRACER
- W - WHITE
- Y - WHITE WITH YELLOW TRACER

16 ASSEMBLE CONTACTS IN ALL CONNECTOR GROMMET HOLES.

17 SECURE TO CABLE USING ITEM 17. MARKING TO READ AWAY FROM CONNECTOR.

18 SEAL ZIPPER TUBING PER ND1002153

19 SERIALIZE PER ND1002023

20 ITEM 22 FURNISHED WITH ITEM 2

21 ITEM 23 FURNISHED WITH ITEM 1

22 ITEM 19 SHALL BE SHORTENED WHEN NECESSARY TO AVOID INTERFERENCE WITH FERRULES AND MAY BE CUT LENGTHWISE ON ONE SIDE. SELECT ONE OR MORE OF ITEM 19 AS REQUIRED TO FIT.

PENNANT NOTE — GENERAL NOTES

TOLERANCE CHART. UNLESS OTHERWISE SPECIFIED ---

APPLICABLE LENGTH FOR WIRE OR CABLE. STRIP WIRE. STRIP JACKET. CUT WIRE OR CUT SHIELD.	TOLERANCE: WIRE OR CABLE	WIRE	STRIP JACKET	WIRE	CUT SHIELD
UNDER 1 INCH	+ .06-.00	+.03-.00	+.06-.06	+.06-.06	+.06-.06
1 INCH TO 6 INCHES	+ .50-.00	+.06-.00	+.25-.25	+.25-.25	+.25-.25
6 INCHES TO 6 FEET	+1.00-.00		+.50-.50	+.50-.50	+.50-.50
OVER 6 FEET	+2.00-.00				

PENNANT — LIST OF MATERIALS

NOTE	ITEM	QTY	PART NO	DESCRIPTION
16	1	1	MS3126F22-55SW (1897046-551)	CONNECTOR PLUG
16	2	1	MS3126F22-55PW (1897045-551)	CONNECTOR PLUG
	3	1	1900975-001	WIRE ND1002181 TYPE 2. CLASS 4. WHT JAKT. 20AWG. WHT/BLU. WHT/RED 646 FT TOTAL LENGTH
	4	1	1900975-002	WIRE ND1002181 TYPE 1. CLASS 4. WHT JAKT. 20AWG. 380 FT TOTAL LENGTH
	5	1	1900975-003	WIRE ND1002181 TYPE 1. CLASS 1. 20AWG. 38 FT TOTAL LENGTH
	6	1	1900975-004	WIRE ND1002181 TYPE 1. CLASS 1. 22AWG. 32 FT TOTAL LENGTH
10	7	17	1000243-011	FERRULE. ELEC COND
10	8	17	1000242-009	FERRULE. ELEC COND
10	9	10	1000243-005	FERRULE. ELEC COND
10	10	10	1000242-004	FERRULE. ELEC COND
10	11	50	1010490-198	INSULATION. SLEEVING ELEC
	12	1	1900975-005	ZIPPER TUBING. ND1002155. TYPE 1. PLASTIC. FLEXIBLE. 1.25 IN. DIA. 42 FT TOTAL LENGTH
10	13	1	1016128-011	BAND-IDENTIFICATION
10	14	~~1~~ 3	1016128-041	BAND-IDENTIFICATION
10	15	5	1016006-002	SPLICE REDUCER
10	16	5	1010490-258	INSULATION-SLEEVING ELEC

PENNANT LIST OF MATERIALS

NOTE	ITEM	QTY	PART NO	DESCRIPTION
	17	AR	MIL-T-713	LACING TAPE, TYPE P, CLASS 2 BLACK (ES-2732 NO. 18)
	18		1900975-006	WIRE COAXIAL MIL-C-17/69A RG 188 A/U 38 FT TOTAL LENGTH
22	19	2	1897147-108,-112	CABLE CLAMP SLEEVE
	20	2	1000243-006	FERRULE ELECT. COND
	21	2	1000242-005	FERRULE ELECT. COND
20	22			CONTACT PINS
21	23			CONTACT SOCKETS
	24	1	1900975-007	WIRE ND1002181, TYPE 3, CLASS 4, WHITE JACKET 20AWG, WHT-BLU, WHT-RED, WHT-YEL, 76 FT TOT. LG
	25	1	1900975-008	ZIPPER TUBING, ND1002155, TYPE 1, PLASTIC, FLEXIBLE .50 DIA 2 FT TOTAL LENGTH
	26	1	MS3127E24-61P (1897055-610)	CONNECTOR
10	27	2	1000243-015	FERRULE ELECT. COND
10	28	2	1000243-016	FERRULE ELECT. COND
10	29	2	1010490-194	INSULATION SLEEVING ELECT.
10	30	2	1010490-196	INSULATION SLEEVING ELECT.
~~10~~	31	~~1~~	~~1016282-24~~	~~RUBBER GROMMET~~ DELETED

MANNED SPACECRAFT CENTER HOUSTON, TEXAS	SIZE A	1900975
SCALE - NONE	REV LTR # D	SHEET 6 OF 17

CONDUCTOR INDIVIDUAL LENGTH NUMBER	ITEM NO. [2]	FROM CUT WIRE OR SHIELD STRIP WIRE OR JACKET CIRCUIT POINT [2]	T I N [2]	TERMINATION SPEC. [1] ITEM NO.	NO.	TO CUT WIRE OR SHIELD STRIP WIRE OR JACKET CIRCUIT POINT [2]	T I N [2]	TERMINATION SPEC [1] ITEM NO.	NO.
A 1	3	230	200	7 8	5	230	200	A 11	7A
				A 11					
A 1A	6	SHLD A1	25N			E1	25N		
A 1L		P1-D	19N	23		P2-D	19N	22	
A 1R		P1-C	19N	23		P2-C	19N	22	
A 2	3	230	200	7 8	5	230	200	A 11	7A
				A 11					
A 2A	6	SHLD A2	25N			E1	25N		
A 2L		P1-F	19N	23		P2-F	19N	22	
A 2R		P1-E	19N	23		P2-E	19N	22	
A 3	3	230	200	7 8	5	230	200	A 11	7A
				A 11					
A 3A	6	SHLD A3	25N			E1	25N		
A 3L		P1-H	19N	23		P2-H	19N	22	
A 3R		P1-G	19N	23		P2-G	19N	22	
A 4	3	230	200	7 8	5	230	200	A 11	7A
				A 11					
A 4A	6	SHLD A4	25N			E1	25		

[1] THE STD CONDUCTOR TERMINATION FIGURES ARE PER
[2] DIMENSIONS ARE IN INCHES AND TWO PLACE DECIMALS.

MANNED SPACECRAFT CENTER HOUSTON, TEXAS	SIZE A	1900975
SCALE - NONE	REV LTR B	SHEET 7 OF 17

CONDUCTOR INDIVIDUAL LENGTH NUMBER	ITEM NO. [2]	FROM CUT WIRE OR SHIELD STRIP WIRE OR JACKET CIRCUIT POINT [2]	T I N [2]	TERMINATION SPEC. [1] ITEM NO.	NO.	TO CUT WIRE OR SHIELD STRIP WIRE OR JACKET CIRCUIT POINT [2]	T I N [2]	TERMINATION SPEC [1] ITEM NO.	NO.
A 4L		P1-K	19N	23		P2-K	19	22	
A 4R		P1-J	19N	23		P2-J	19	22	
A 5	3	280	250	7 8	5	280	250	A 11	7A
				A 11					
A 5A	6	SHLD A5	25N			E1	25N		
A 5L		P1-M	19N	23		P2-M	19N	22	
A 5R		P1-L	19N	23		P2-L	19N	22	
A 6	3	280	250	7 8	5	280	250	A 11	7A
				A 11					
A 6A	6	SHLD A6	25N			E1	25N		
A 6L		P1-V	19N	23		P2-V	19N	22	
A 6R		P1-U	19N	23		P2-U	19N	22	
A 7	3	280	250	7 8	5	280	250	A 11	7A
				A 11					
A 7A	6	SHLD A7	25N			E2	25N		
A 7L		P1-FF	19N	23		P2-FF	19N	22	
A 7R		P1-EE	19N	23		P2-EE	19N	22	
A 8	4	280	250	10 9	5	280	250	A 11	7A

[1] THE STD CONDUCTOR TERMINATION FIGURES ARE PER
[2] DIMENSIONS ARE IN INCHES AND TWO PLACE DECIMALS.

MANNED SPACECRAFT CENTER HOUSTON, TEXAS	SIZE A	1900975
SCALE - NONE	REV LTR B	SHEET 8 OF 17

CONDUCTOR INDIVIDUAL LENGTH NUMBER	ITEM NO. [2]	FROM CUT WIRE OR SHIELD STRIP WIRE OR JACKET CIRCUIT POINT [2]	T I N [2]	TERMINATION SPEC. [1] ITEM NO.	NO.	TO CUT WIRE OR SHIELD STRIP WIRE OR JACKET CIRCUIT POINT [2]	T I N [2]	TERMINATION SPEC [1] ITEM NO.	NO.
				A 11					
A 8A	6	SHLD A8	25N			E2	25N		
A 8W		P1-I*	19N	23		P2-I*	19N	22	
A 9	4	330	300	10 9	5	330	300	A 11	7A
				A 11					
A 9A	6	SHLD A9	25N			E2	25N		
A 9W		P1-J*	19N	23		P2-J*	19N	22	
A 10	4	330	300	10 9	5	330	300	A 11	7A
				A 11					
A 10A	6	SHLD A10	25N			E2	25N		
A 10W		P1-K*	19N	23		P2-K*	19N	22	
A 11	4	330	300	10 9	5	330	300	A 11	7A
				A 11					
A 11A	6	SHLD A11	25N			E2	25N		
A 11W		P1-M*	19N	23		P2-M*	19N	22	
A 12	4	330	300	10 9	5	330	300	A 11	7A
				A 11					
A 12A	6	SHLD A12	25N			E2	25N		

[1] THE STD CONDUCTOR TERMINATION FIGURES ARE PER
[2] DIMENSIONS ARE IN INCHES AND TWO PLACE DECIMALS.

MANNED SPACECRAFT CENTER HOUSTON, TEXAS	SIZE A	1900975
SCALE - NONE	REV LTR B	SHEET 9 OF 17

GIC CABLE W11 B 1900975

CONDUCTOR INDIVIDUAL LENGTH NUMBER	ITEM NO.	2	FROM CUT WIRE OR SHIELD STRIP WIRE OR JACKET CIRCUIT POINT	2	T I N	2	TERMINATION SPEC. 1 ITEM NO.				NO.	TO CUT WIRE OR SHIELD STRIP WIRE OR JACKET CIRCUIT POINT	2	T I N	2	TERMINATION SPEC 1 ITEM NO.				NO.
A 12W			P1-P	19N			23					P2-P	19N			22				
A 13	4			380	350		10	9		5			380	350		A 11			7A	
							A 11													
A 13A	6		SHLD A13	25N								E3	25N							
A 13W			P1-N	19N			23					P2-N	19N			22				
A 14	3			380	350		8	9		5			380	350		A 11			7A	
							A 11													
A 14A	6		SHLD A14	25N								E3	25N							
A 14L			P1-X	19N			23					P2-X	19N			22				
A 14R			P1-W	19N			23					P2-W	19N			22				
A 15	3			380	350		8	9		5			380	350		A 11			7A	
							A 11													
A 15A	6		SHLD A15	25N								E3	25N							
A 15L			P1-Z	19N			23					P2-Z	19N			22				
A 15R			P1-Y	19N			23					P2-Y	19N			22				
A 16	3			380	350		7	8		5			380	350		A 11			7A	
							A 11													
A 16A	6		SHLD A16	25N								E3	25N							

1> THE STD CONDUCTOR TERMINATION FIGURES ARE PER
2> DIMENSIONS ARE IN INCHES AND TWO PLACE DECIMALS.

MIL 2069 - 4-65 WIR

MANNED SPACECRAFT CENTER HOUSTON, TEXAS | SIZE A | 1900975
SCALE - NONE | REV LTR B | SHEET 10 OF 17

GIC CABLE W11 B 1900975

CONDUCTOR INDIVIDUAL LENGTH NUMBER	ITEM NO.	2	FROM CUT WIRE OR SHIELD STRIP WIRE OR JACKET CIRCUIT POINT	2	T I N	2	TERMINATION SPEC. 1 ITEM NO.				NO.	TO CUT WIRE OR SHIELD STRIP WIRE OR JACKET CIRCUIT POINT	2	T I N	2	TERMINATION SPEC 1 ITEM NO.				NO.
A 16L			P1-B*	19N			23					P2-B*	19N			22				
A 16R			P1-A*	19N			23					P2-A*	19N			22				
A 17	3			430	400		7	8		5			430	400		A 11			7A	
							A 11													
A 17A	6		SHLD A17	25N								E3	25N							
A 17L			P1-D*	19N			23					P2-D*	19N			22				
A 17R			P1-C*	19N			23					P2-C*	19N			22				
A 18	3			430	400		7	8		5			430	400		A 11			7A	
							A 11													
A 18A	6		SHLD A18	25N								E3	25N							
A 18L			P1-R*	19N			23					P2-R*	19N			22				
A 18R			P1-Q*	19N			23					P2-Q*	19N			22				
A 19	3			430	400		7	8		5			430	400		A 11			7A	
							A 11													
A 19A	6		SHLD A19	25N								E4	25N							
A 19L			P1-T*	19N			23					P2-T*	19N			22				
A 19R			P1-S*	19N			23					P2-S*	19N			22				
A 20	3			430	400		7	8		5			430	400		A 11			7A	

1> THE STD CONDUCTOR TERMINATION FIGURES ARE PER
2> DIMENSIONS ARE IN INCHES AND TWO PLACE DECIMALS.

MIL 2069 - 4-65 WIR

MANNED SPACECRAFT CENTER HOUSTON, TEXAS | SIZE A | 1900975
SCALE - NONE | REV LTR B | SHEET 11 OF 17

GIC CABLE W11 #D 1900975

CONDUCTOR INDIVIDUAL LENGTH NUMBER	ITEM NO.	2	FROM CUT WIRE OR SHIELD STRIP WIRE OR JACKET CIRCUIT POINT	2	T I N	2	TERMINATION SPEC. 1 ITEM NO.				NO.	TO CUT WIRE OR SHIELD STRIP WIRE OR JACKET CIRCUIT POINT	2	T I N	2	TERMINATION SPEC 1 ITEM NO.				NO.
							A 11													
A 20A	6		SHLD A20	25N								E4	25N							
A 20L			P1-V*	19N			23					P2-V*	19N			22				
A 20R			P1-U*	19N			23					P2-U*	19N			22				
A 21	3			480	450		7	8		5			480	450		A 11			7A	
							A 11													
A 21A	6		SHLD A21	25N								E4	25N							
A 21L			P1-X*	19N			23					P2-X*	19N			22				
A 21R			P1-W*	19N			23					P2-W*	19N			22				
A 22	3			480	450		7	8		5			480	450		A 11			7A	
							A 11													
A 22A	6		SHLD A22	25N								E4	25N							
A 22L			P1-BB	19N			23					P2-BB	19N			22				
A 22R			P1-AA	19N			23					P2-AA	19N			22				
A 23	4			480	450		9	10		5			480	450		A 11			7A	
							A 11													
A 23A	6		SHLD A23	25N								E4	25N							
A 23W			P1-A	19N			23					P2-A	19N			22				

1> THE STD CONDUCTOR TERMINATION FIGURES ARE PER
2> DIMENSIONS ARE IN INCHES AND TWO PLACE DECIMALS.

MIL 2069 - 4-65 WIR

MANNED SPACECRAFT CENTER HOUSTON, TEXAS | SIZE A | 1900975
SCALE - NONE | REV LTR #D | SHEET 12 OF 17

GIC CABLE W11 C 1900975

CONDUCTOR INDIVIDUAL LENGTH NUMBER	ITEM NO.	2	FROM CUT WIRE OR SHIELD STRIP WIRE OR JACKET CIRCUIT POINT	2	T I N	2	TERMINATION SPEC. 1 ITEM NO.				NO.	TO CUT WIRE OR SHIELD STRIP WIRE OR JACKET CIRCUIT POINT	2	T I N	2	TERMINATION SPEC 1 ITEM NO.				NO.
A 24			DELETED																	
			DELETED																	
A 24A			DELETED																	
A 24L			DELFTED																	
A 24R			DELETED																	
A 25	4			530	500		9	10		5			530	500		A 11			7A	
							A 11													
A 25A	6		SHLD A25	25N								E5	25N							
A 25W			P1-T	19N			23					P2-T	19N			22				
A 26			DELETED																	
			DELETED																	
A 26A			DELFTED																	
A 26L			DELETED																	
A 26R			DELETED																	
A 27			DELETED																	
			DELETED																	
A 27A			DELETED																	
A 27L			DELETED																	

1> THE STD CONDUCTOR TERMINATION FIGURES ARE PER
2> DIMENSIONS ARE IN INCHES AND TWO PLACE DECIMALS.

MIL 2069 - 4-65 WIR

MANNED SPACECRAFT CENTER HOUSTON, TEXAS | SIZE A | 1900975
SCALE - NONE | REV LTR C | SHEET 13 OF 17

GIC CABLE W11 B 1900975

CONDUCTOR INDIVIDUAL LENGTH NUMBER	ITEM NO. (3)	FROM CUT WIRE OR SHIELD STRIP WIRE OR JACKET CIRCUIT POINT (2)	T I N (3)	FROM TERMINATION SPEC. (1) ITEM NO.	NO.	TO CUT WIRE OR SHIELD STRIP WIRE OR JACKET CIRCUIT POINT (2)	T I N (3)	TO TERMINATION SPEC. (1) ITEM NO.	NO.
A 27R		DELETED							
A 28		DELETED							
		DELETED							
A 28A		DELETED							
A 28L		DELETED							
A 28R		DELETED							
A 29		DELETED							
		DELETED							
A 29A		DELETED							
A 29L		DELETED							
A 29R		DELETED							
A 30		DELETED							
		DELETED							
A 30A		DELETED							
A 30W		DELETED							
A 31		DELETED							
		DELETED							
A 31A		DELETED							

(1) THE STD CONDUCTOR TERMINATION FIGURES ARE PER
(2) DIMENSIONS ARE IN INCHES AND TWO PLACE DECIMALS.

MANNED SPACECRAFT CENTER HOUSTON, TEXAS | SIZE A | 1900975
SCALE-NONE | REV LTR B | SHEET 14 OF 17

MIL-2049 - 4-63 WIR

GIC CABLE W11 B 1900975

CONDUCTOR INDIVIDUAL LENGTH NUMBER	ITEM NO. (3)	FROM CUT WIRE OR SHIELD STRIP WIRE OR JACKET CIRCUIT POINT (2)	T I N (3)	FROM TERMINATION SPEC. (1) ITEM NO.	NO.	TO CUT WIRE OR SHIELD STRIP WIRE OR JACKET CIRCUIT POINT (2)	T I N (3)	TO TERMINATION SPEC. (1) ITEM NO.	NO.
A 31W		DELETED							
A 32	5	P1-GG	19N	23		P2-GG	19N	22	
A 33	6	P1-B	19N	23		E1	25N		
A 34	6	E1	25N			E2	25N		
A 35	6	E2	25N			E3	25N		
A 36	6	E3	25N			E4	25N		
A 37	6	E4	25N			E5	25N		
A 38	18		580 550	20 21	5		580 550	20 21	5
				A 19				A 19	
A 38A	6	SHLD A38	25N			P1-S	19N	23	
A 38B	6	P2-S	19N	22		SHLD A38	25N		
A 38W		P1-R	19N	23		P2-R	19N	22	
A 39	24		480 450	27 28	5		480 450	A 30	7A
				A 29					
A 39A	6	SHLD A39	25N			E6	25N		
A 39L		P3-Y	19N			P2-H*	19N	22	
A 39R		P3-W	19N			P2-G*	19N	22	
A 39Y		P3-Z	19N			P2-F*	19N	22	

(1) THE STD CONDUCTOR TERMINATION FIGURES ARE PER
(2) DIMENSIONS ARE IN INCHES AND TWO PLACE DECIMALS.

MANNED SPACECRAFT CENTER HOUSTON, TEXAS | SIZE A | 1900975
SCALE-NONE | REV LTR B | SHEET 15 OF 17

MIL-2049 - 4-63 WIR

GIC CABLE W11 B 1900975

CONDUCTOR INDIVIDUAL LENGTH NUMBER	ITEM NO. (3)	FROM CUT WIRE OR SHIELD STRIP WIRE OR JACKET CIRCUIT POINT (2)	T I N (3)	FROM TERMINATION SPEC. (1) ITEM NO.	NO.	TO CUT WIRE OR SHIELD STRIP WIRE OR JACKET CIRCUIT POINT (2)	T I N (3)	TO TERMINATION SPEC. (1) ITEM NO.	NO.
A 40	24		480 450	27 28	5		480 450	A 30	7A
				A 29					
A 40A	6	SHLD A40	25N			E6	25N		
A 40L		P3-V	19N			P2-P*	19N	22	
A 40R		P3-U	19N			P2-Y*	19N	22	
A 40Y		P3-S	19N			P2-Z*	19N	22	
A 41	3		480 450	7 8	5		480 450	A 11	7A
				A 11					
A 41A	6	SHLD A41	25N			E6	25N		
A 41L		P3-B*	19N			P2-DD	19N	22	
A 41R		P3-C*	19N			P2-CC	19N	22	
A 42	5	E6	25N			P2-N*	19N		
A 43	5	P3-B	19N			E6	25N		

(1) THE STD CONDUCTOR TERMINATION FIGURES ARE PER
(2) DIMENSIONS ARE IN INCHES AND TWO PLACE DECIMALS.

MANNED SPACECRAFT CENTER HOUSTON, TEXAS | SIZE A | 1900975
SCALE-NONE | REV LTR B | SHEET 16 OF 17

MIL-2049 - 4-63 WIR

1900975

REVISIONS					
SYM	ZONE	DESCRIPTION	CHG NO.	DATE	APPD.
M		SEE SHEET 1 FOR REVISION RECORD			

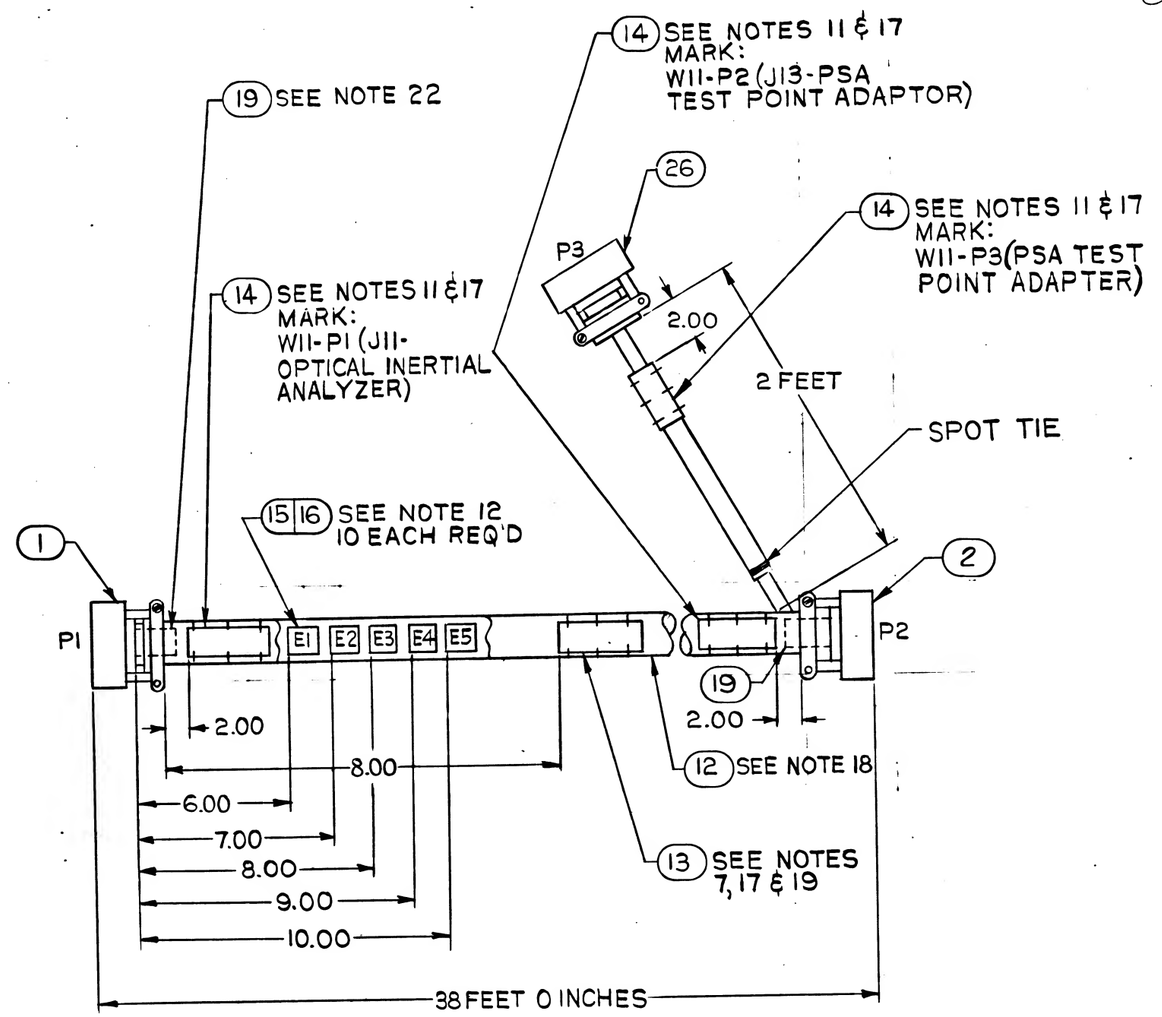

LOCATION TOLERANCE
(EXCEPT LENGTH)
± .05

1901308	1900005-011
NEXT ASSY	USED ON
APPLICATION	

UNLESS OTHERWISE SPECIFIED
DIMENSIONS ARE IN INCHES
TOLERANCES ON
FRACTIONS ± — DECIMALS ± — ANGLES ± —
DO NOT SCALE THIS DRAWING
MATERIAL —
CONTRACT NAS 9-497

AC SPARK PLUG DIVISION, GMC
MILWAUKEE, WISCONSIN
ACSP PN
DRAWN T. KOSMATKA 1 NOV 63 DATE
CHECKED E.L. HINTZ 12 NOV 63
APPROVAL R.B. LEGION 13 NOV 63
APPROVAL Wehmeyer 9/4/64
NASA APPROVAL
MIT APPROVAL

MANNED
SPACECRAFT CENTER
HOUSTON, TEXAS

CABLE INTERCONNECT W11
ISS, OSS & G&N TESTING

CODE IDENT NO. | SIZE C | 1900975
SCALE — | SHEET 17 OF 17

MIL 1077C-P

APPLICATION		REVISIONS			
NEXT ASSY	USED ON	SYM	DESCRIPTION	DATE	APPROVAL
1901308	1900005-011	A	CHANGE IN ACCORDANCE WITH CM-193190	19 FEB 64	
	(M)	B	CHANGE IN ACCORDANCE WITH CM 197501 REVISED CUSTOMER DATA (V2-G4) REVISED PER TDRR 10624	27 MAY 64	
	(M)	C	CHANGE IN ACCORDANCE WITH CM 197756 REVISED PER TDRR 11727	9 JUL 64	
	(M)	D	REVISED PER TDRR 12382	28 SEP 64	
		E	REVISED AND UPGRADED TO CLASS 'A' PER TDRR 19086	24 MAY 65	

REV																									
SHEET																									
REV STATUS	RE.	E	C	B	B	E	E	B	B	B	B	B	D	C	B	B	B	E							
OF SHEETS	SHEET	1	2	3	4	5	6	7	8	9	10	11	12	13	14	15	16	17							

AC SPARK PLUG DIVISION, GMC
MILWAUKEE, WISCONSIN

ACSP PN

DRAWN DATE 1 NOV 63
CHECKED 12 NOV 63
APPROVAL 13 NOV 63
APPROVAL 13 NOV 63

NASA APPROVAL
MIT APPROVAL 7 Jan 64

CONTRACT NAS 9-497

MANNED
SPACECRAFT CENTER
HOUSTON, TEXAS

CABLE INTERCONNECT W11
ISS, OSS, & G&N TESTING

CODE IDENT NO.	SIZE		REV
99974	A	1900975	E

SCALE NONE

SHEET 1 OF 17

PENNANT NOTE — GENERAL NOTES

1 SEE CONDUCTOR CHART. PENNANT NOTE 1.

2 SEE CONDUCTOR CHART. PENNANT NOTE 2.

3 INTERPRET DRAWING IN ACCORDANCE WITH STANDARDS PRESCRIBED BY MIL-D-70327.

4 MARK CONDUCTOR IDENTIFICATION ON SINGLE CONDUCTORS PER ND1002019 OMITTING ALL SUFFIX LETTERS EXCEPT A AND B.

5 SPACING OF CONDUCTOR IDENTIFICATION SHALL BE EVERY 15 INCHES MAX. AND AT EACH TERMINATION.

6 SPIRALLING OF THE MARKING IS ALLOWED.

7 IDENTIFY USING DRAWING NO. AND REVISION LETTER PER MIL-STD-130 (ES-267). .12 INCH HIGH CHARACTERS WHITE.

8 Y OR N IN TINNED COLUMN INDICATES YES OR NO.

9 A LETTER WITH AN ASTERISK SUFFIX, INDICATES A LOWER CASE LETTER.

10 VENDOR ITEM - SEE SPECIFICATION CONTROL DRAWING.

11 MARK IDENTIFICATION BAND WITH REFERENCE DESIGNATION AS NOTED .12 INCH HIGH COLOR WHITE. HOT IMPRESSION STAMPING PER ND1002019. CENTRALIZE.

12 MARK SLEEVING WITH REFERENCE DESIGNATIONS AS SHOWN .12 INCH HIGH. COLOR BLACK PER ND1002019.

13 MARK SLEEVING OF MULTI-CONDUCTORS WITH THE CONDUCTOR NUMBER .12 INCH HIGH. COLOR BLACK. PER ND1002019 WHEN SLEEVING ITEM NUMBERS FOLLOW AN A OR T IN THE ACCESSORIES ITEM NUMBER FIELD.

PENNANT NOTE — GENERAL NOTES

14 A OR T PREFIX IN THE ACCESSORIES ITEM NUMBER COLUMN INDICATES THE READING POSITION AWAY FROM TERMINATION OR TOWARD TERMINATION RESPECTIVELY. OF THE WIRE MARKER SLEEVE.

15 THE SUFFIX LETTER OF A CONDUCTOR IDENTIFICATION NUMBER INDICATES CONDUCTOR SHIELDING. COLOR. OR MARKING.
- A - FROM END SHIELD
- L - WHITE WITH BLUE TRACER
- R - WHITE WITH RED TRACER
- W - WHITE
- Y - WHITE WITH YELLOW TRACER

16 ASSEMBLE CONTACTS IN ALL CONNECTOR GROMMET HOLES.

17 SECURE TO CABLE USING ITEM 17. MARKING TO READ AWAY FROM CONNECTOR.

18 SEAL ZIPPER TUBING PER ND1002153

19 SERIALIZE PER ND1002023

20 ITEM 22 FURNISHED WITH ITEM 2

21 ITEM 23 FURNISHED WITH ITEM 1

22 ITEM 19 SHALL BE SHORTENED WHEN NECESSARY TO AVOID INTERFERENCE WITH FERRULES AND MAY BE CUT LENGTHWISE ON ONE SIDE. SELECT ONE OR MORE OF ITEM 19 AS REQUIRED TO FIT.

PENNANT NOTE — GENERAL NOTES

TOLERANCE CHART. UNLESS OTHERWISE SPECIFIED ---

APPLICABLE LENGTH FOR WIRE OR CABLE. STRIP WIRE. STRIP JACKET. CUT WIRE OR CUT SHIELD.	TOLERANCE: WIRE OR CABLE	STRIP: WIRE	STRIP: JACKET	CUT: WIRE	CUT: SHIELD
UNDER 1 INCH	+ .06-.00	+.03-.00	+.06-.06	+.06-.06	+.06-.06
1 INCH TO 6 INCHES	+ .50-.00	+.06-.00	+.25-.25	+.25-.25	+.25-.25
6 INCHES TO 6 FEET	+1.00-.00		+.50-.50	+.50-.50	+.50-.50
OVER 6 FEET	+2.00-.00				

PENNANT — LIST OF MATERIALS

NOTE	ITEM	QTY	PART NO	DESCRIPTION
16	1	1	MS3126F22-55SW (1897046-551)	CONNECTOR PLUG
16	2	1	MS3126F22-55PW (1897045-551)	CONNECTOR PLUG
	3	1	1900975-001	WIRE ND1002181 TYPE 2. CLASS 4. WHT JAKT. 20AWG. WHT/BLU. WHT/RED 646 FT TOTAL LENGTH
	4	1	1900975-002	WIRE ND1002181 TYPE 1. CLASS 4. WHT JAKT. 20AWG. 380 FT TOTAL LENGTH
	5	1	1900975-003	WIRE ND1002181 TYPE 1. CLASS 1. 20AWG. 38 FT TOTAL LENGTH
	6	1	1900975-004	WIRE ND1002181 TYPE 1. CLASS 1. 22AWG. 32 FT TOTAL LENGTH
10	7	17	1000243-011	FERRULE. ELEC COND
10	8	17	1000242-009	FERRULE. ELEC COND
10	9	10	1000243-005	FERRULE. ELEC COND
10	10	10	1000242-004	FERRULE. ELEC COND
10	11	50	1010490-198	INSULATION. SLEEVING ELEC
	12	1	1900975-005	ZIPPER TUBING. ND1002155. TYPE 1. PLASTIC. FLEXIBLE. 1.25 IN. DIA. 42 FT TOTAL LENGTH
10	13	1	1016128-011	BAND-IDENTIFICATION
10	14	~~4~~ 3	1016128-041	BAND-IDENTIFICATION
10	15	5	1016006-002	SPLICE REDUCER
10	16	~~7~~ 6	1010490-258	INSULATION-SLEEVING ELEC

PENNANT LIST OF MATERIALS

NOTE	ITEM	QTY	PART NO	DESCRIPTION
	17	AR	MIL-T-713	LACING TAPE, TYPE P, CLASS 2 BLACK (ES-2732 NO. 18)
	18		1900975-006	WIRE COAXIAL MIL-C-17/69A RG 188 A/U 38 FT TOTAL LENGTH
22	19	2	1897147-108,-112	CABLE CLAMP SLEEVE
	20	2	1000243-006	FERRULE ELECT. COND
	21	2	1000242-005	FERRULE ELECT. COND
20	22			CONTACT PINS
21	23			CONTACT SOCKETS
	24	1	1900975-007	WIRE ND1002181, TYPE 3, CLASS 4, WHITE JACKET 20AWG, WHT-BLU, WHT-RED, WHT-YEL, 76 FT TOT. LG
	25	1	1900975-008	ZIPPER TUBING, ND1002155, TYPE 1, PLASTIC, FLEXIBLE .50 DIA 2 FT TOTAL LENGTH
	26	1	MS3127E24-61P (1897055-610)	CONNECTOR
10	27	2	1000243-015	FERRULE ELECT. COND
10	28	2	1000243-016	FERRULE ELECT. COND
10	29	2	1010490-194	INSULATION SLEEVING ELECT.
10	30	2	1010490-196	INSULATION SLEEVING ELECT.
~~10~~	~~31~~	~~1~~	~~1016282-24~~	~~RUBBER GROMMET~~ DELETED
	32		1016006-001	SPLICE REDUCER,

MANNED SPACECRAFT CENTER HOUSTON, TEXAS | SIZE A | 1900975
SCALE-NONE | REV LTR ~~B~~ E | SHEET 6 OF 17

CONDUCTOR NUMBER	ITEM NO.	3>	FROM CUT WIRE OR SHIELD STRIP WIRE OR JACKET CIRCUIT POINT	2>	T I N	3>	TERMINATION SPEC. ITEM NO.	1>	NO.	TO CUT WIRE OR SHIELD STRIP WIRE OR JACKET CIRCUIT POINT	2>	T I N	3>	TERMINATION SPEC ITEM NO.	1>	NO.
A 1	3			230	200		7 8	5			230	200		A 11	7A	
							A 11									
A 1A	6		SHLD A1	25N						E1	25N					
A 1L			P1-D	19N			23			P2-D	19N			22		
A 1R			P1-C	19N			23			P2-C	19N			22		
A 2	3			230	200		7 8	5			230	200		A 11	7A	
							A 11									
A 2A	6		SHLD A2	25N						E1	25N					
A 2L			P1-F	19N			23			P2-F	19N			22		
A 2R			P1-E	19N			23			P2-E	19N			22		
A 3	3			230	200		7 8	5			230	200		A 11	7A	
							A 11									
A 3A	6		SHLD A3	25N						E1	25N					
A 3L			P1-H	19N			23			P2-H	19N			22		
A 3R			P1-G	19N			23			P2-G	19N			22		
A 4	3			230	200		7 8	5			230	200		A 11	7A	
							A 11									
A 4A	6		SHLD A4	25N						E1	25					

1> THE STD CONDUCTOR TERMINATION FIGURES ARE PER
2> DIMENSIONS ARE IN INCHES AND TWO PLACE DECIMALS.

MANNED SPACECRAFT CENTER HOUSTON, TEXAS | SIZE A | 1900975
SCALE-NONE | REV LTR B | SHEET 7 OF 17

CONDUCTOR NUMBER	ITEM NO.	3>	FROM CUT WIRE OR SHIELD STRIP WIRE OR JACKET CIRCUIT POINT	2>	T I N	3>	TERMINATION SPEC. ITEM NO.	1>	NO.	TO CUT WIRE OR SHIELD STRIP WIRE OR JACKET CIRCUIT POINT	2>	T I N	3>	TERMINATION SPEC ITEM NO.	1>	NO.
A 4L			P1-K	19N			23			P2-K	19			22		
A 4R			P1-J	19N			23			P2-J	19			22		
A 5	3			280	250		7 8	5			280	250		A 11	7A	
							A 11									
A 5A	6		SHLD A5	25N						E1	25N					
A 5L			P1-M	19N			23			P2-M	19N			22		
A 5R			P1-L	19N			23			P2-L	19N			22		
A 6	3			280	250		7 8	5			280	250		A 11	7A	
							A 11									
A 6A	6		SHLD A6	25N						E1	25N					
A 6L			P1-V	19N			23			P2-V	19N			22		
A 6R			P1-U	19N			23			P2-U	19N			22		
A 7	3			280	250		7 8	5			280	250		A 11	7A	
							A 11									
A 7A	6		SHLD A7	25N						E2	25N					
A 7L			P1-FF	19N			23			P2-FF	19N			22		
A 7R			P1-EE	19N			23			P2-EE	19N			22		
A 8	4			280	250		10 9	5			280	250		A 11	7A	

1> THE STD CONDUCTOR TERMINATION FIGURES ARE PER
2> DIMENSIONS ARE IN INCHES AND TWO PLACE DECIMALS.

MANNED SPACECRAFT CENTER HOUSTON, TEXAS | SIZE A | 1900975
SCALE-NONE | REV LTR B | SHEET 8 OF 17

CONDUCTOR NUMBER	ITEM NO.	3>	FROM CUT WIRE OR SHIELD STRIP WIRE OR JACKET CIRCUIT POINT	2>	T I N	3>	TERMINATION SPEC. ITEM NO.	1>	NO.	TO CUT WIRE OR SHIELD STRIP WIRE OR JACKET CIRCUIT POINT	2>	T I N	3>	TERMINATION SPEC ITEM NO.	1>	NO.
							A 11									
A 8A	6		SHLD A8	25N						E2	25N					
A 8W			P1-I*	19N			23			P2-I*	19N			22		
A 9	4			330	300		10 9	5			330	300		A 11	7A	
							A 11									
A 9A	6		SHLD A9	25N						E2	25N					
A 9W			P1-J*	19N			23			P2-J*	19N			22		
A 10	4			330	300		10 9	5			330	300		A 11	7A	
							A 11									
A 10A	6		SHLD A10	25N						E2	25N					
A 10W			P1-K*	19N			23			P2-K*	19N			22		
A 11	4			330	300		10 9	5			330	300		A 11	7A	
							A 11									
A 11A	6		SHLD A11	25N						E2	25N					
A 11W			P1-M*	19N			23			P2-M*	19N			22		
A 12	4			330	300		10 9	5			330	300		A 11	7A	
							A 11									
A 12A	6		SHLD A12	25N						E2	25N					

1> THE STD CONDUCTOR TERMINATION FIGURES ARE PER
2> DIMENSIONS ARE IN INCHES AND TWO PLACE DECIMALS.

MANNED SPACECRAFT CENTER HOUSTON, TEXAS | SIZE A | 1900975
SCALE-NONE | REV LTR B | SHEET 9 OF 17

GIC CABLE W11 B 1900975

CONDUCTOR INDIVIDUAL LENGTH NUMBER	ITEM NO. (2)	FROM CUT WIRE OR SHIELD STRIP WIRE OR JACKET CIRCUIT POINT (2)	TI NU (2)	TERMINATION SPEC. (1) ITEM NO.	NO.	TO CUT WIRE OR SHIELD STRIP WIRE OR JACKET CIRCUIT POINT (2)	TI NU (2)	TERMINATION SPEC (1) ITEM NO.	NO.
A 12W		P1-P	19N	23		P2-P	19N	22	
A 13	4		380 350	10 9	5		380 350	A 11	7A
				A 11					
A 13A	6	SHLD A13	25N			E3	25N		
A 13W		P1-N	19N	23		P2-N	19N	22	
A 14	3		380 350	8 9	5		380 350	A 11	7A
				A 11					
A 14A	6	SHLD A14	25N			E3	25N		
A 14L		P1-X	19N	23		P2-X	19N	22	
A 14R		P1-W	19N	23		P2-W	19N	22	
A 15	3		380 350	8 9	5		380 350	A 11	7A
				A 11					
A 15A	6	SHLD A15	25N			E3	25N		
A 15L		P1-Z	19N	23		P2-Z	19N	22	
A 15R		P1-Y	19N	23		P2-Y	19N	22	
A 16	3		380 350	7 8	5		380 350	A 11	7A
				A 11					
A 16A	6	SHLD A16	25N			E3	25N		

(1) THE STD CONDUCTOR TERMINATION FIGURES ARE PER
(2) DIMENSIONS ARE IN INCHES AND TWO PLACE DECIMALS.

MANNED SPACECRAFT CENTER HOUSTON, TEXAS | SIZE A | 1900975
SCALE - NONE | REV LTR B | SHEET 10 OF 17

MIL 2089 - 4-63 WIR

GIC CABLE W11 B 1900975

CONDUCTOR INDIVIDUAL LENGTH NUMBER	ITEM NO. (2)	FROM CUT WIRE OR SHIELD STRIP WIRE OR JACKET CIRCUIT POINT (2)	TI NU (2)	TERMINATION SPEC. (1) ITEM NO.	NO.	TO CUT WIRE OR SHIELD STRIP WIRE OR JACKET CIRCUIT POINT (2)	TI NU (2)	TERMINATION SPEC (1) ITEM NO.	NO.
A 16L		P1-B*	19N	23		P2-B*	19N	22	
A 16R		P1-A*	19N	23		P2-A*	19N	22	
A 17	3		430 400	7 8	5		430 400	A 11	7A
				A 11					
A 17A	6	SHLD A17	25N			E3	25N		
A 17L		P1-D*	19N	23		P2-D*	19N	22	
A 17R		P1-C*	19N	23		P2-C*	19N	22	
A 18	3		430 400	7 8	5		430 400	A 11	7A
				A 11					
A 18A	6	SHLD A18	25N			E3	25N		
A 18L		P1-R*	19N	23		P2-R*	19N	22	
A 18R		P1-Q*	19N	23		P2-Q*	19N	22	
A 19	3		430 400	7 8	5		430 400	A 11	7A
				A 11					
A 19A	6	SHLD A19	25N			E4	25N		
A 19L		P1-T*	19N	23		P2-T*	19N	22	
A 19R		P1-S*	19N	23		P2-S*	19N	22	
A 20	3		430 400	7 8	5		430 400	A 11	7A

(1) THE STD CONDUCTOR TERMINATION FIGURES ARE PER
(2) DIMENSIONS ARE IN INCHES AND TWO PLACE DECIMALS.

MANNED SPACECRAFT CENTER HOUSTON, TEXAS | SIZE A | 1900975
SCALE - NONE | REV LTR B | SHEET 11 OF 17

MIL 2089 - 4-63 WIR

GIC CABLE W11 #D 1900975

CONDUCTOR INDIVIDUAL LENGTH NUMBER	ITEM NO. (2)	FROM CUT WIRE OR SHIELD STRIP WIRE OR JACKET CIRCUIT POINT (2)	TI NU (2)	TERMINATION SPEC. (1) ITEM NO.	NO.	TO CUT WIRE OR SHIELD STRIP WIRE OR JACKET CIRCUIT POINT (2)	TI NU (2)	TERMINATION SPEC (1) ITEM NO.	NO.
				A 11					
A 20A	6	SHLD A20	25N			E4	25N		
A 20L		P1-V*	19N	23		P2-V*	19N	22	
A 20R		P1-U*	19N	23		P2-U*	19N	22	
A 21	3		480 450	7 8	5		480 450	A 11	7A
				A 11					
A 21A	6	SHLD A21	25N			E4	25N		
A 21L		P1-X*	19N	23		P2-X*	19N	22	
A 21R		P1-W*	19N	23		P2-W*	19N	22	
A 22	3		480 450	7 8	5		480 450	A 11	7A
				A 11					
A 22A	6	SHLD A22	25N			E4	25N		
A 22L		P1-BB	19N	23		P2-BB	19N	22	
A 22R		P1-AA	19N	23		P2-AA	19N	22	
A 23	4		480 450	9 10	5		480 450	A 11	7A
				A 11					
A 23A	6	SHLD A23	25N			E4	25N		
A 23W		P1-A	19N	23		P2-A	19N	22	

(1) THE STD CONDUCTOR TERMINATION FIGURES ARE PER
(2) DIMENSIONS ARE IN INCHES AND TWO PLACE DECIMALS.

MANNED SPACECRAFT CENTER HOUSTON, TEXAS | SIZE A | 1900975
SCALE - NONE | REV LTR #D | SHEET 12 OF 17

MIL 2089 - 4-63 WIR

GIC CABLE W11 C 1900975

CONDUCTOR INDIVIDUAL LENGTH NUMBER	ITEM NO. (2)	FROM CUT WIRE OR SHIELD STRIP WIRE OR JACKET CIRCUIT POINT (2)	TI NU (2)	TERMINATION SPEC. (1) ITEM NO.	NO.	TO CUT WIRE OR SHIELD STRIP WIRE OR JACKET CIRCUIT POINT (2)	TI NU (2)	TERMINATION SPEC (1) ITEM NO.	NO.
A 24		DELETED							
		DELETED							
A 24A		DELETED							
A 24L		DELETED							
A 24R		DELETED							
A 25	4		530 500	9 10	5		530 500	A 11	7A
				A 11					
A 25A	6	SHLD A25	25N			E5	25N		
A 25W		P1-T	19N	23		P2-T	19N	22	
A 26		DELETED							
		DELETED							
A 26A		DELETED							
A 26L		DELETED							
A 26R		DELETED							
A 27		DELETED							
		DELETED							
A 27A		DELETED							
A 27L		DELETED							

(1) THE STD CONDUCTOR TERMINATION FIGURES ARE PER
(2) DIMENSIONS ARE IN INCHES AND TWO PLACE DECIMALS.

MANNED SPACECRAFT CENTER HOUSTON, TEXAS | SIZE A | 1900975
SCALE - NONE | REV LTR C | SHEET 13 OF 17

MIL 2089 - 4-63 WIR

GIC CABLE W11 B 1900975

CONDUCTOR INDIVIDUAL LENGTH NUMBER	ITEM NO. (2)	FROM CUT WIRE OR SHIELD STRIP WIRE OR JACKET CIRCUIT POINT (2)	T I N (2)	TERMINATION SPEC. (1) ITEM NO.	NO.	TO CUT WIRE OR SHIELD STRIP WIRE OR JACKET CIRCUIT POINT (2)	T I N (2)	TERMINATION SPEC. (1) ITEM NO.	NO.
A 27R		DELETED							
A 28		DELETED							
		DELETED							
A 28A		DELETED							
A 28L		DELETED							
A 28R		DELETED							
A 29		DELETED							
		DELETED							
A 29A		DELETED							
A 29L		DELETED							
A 29R		DELETED							
A 30		DELETED							
		DELETED							
A 30A		DELETED							
A 30W		DELETED							
A 31		DELETED							
		DELETED							
A 31A		DELETED							

(1) THE STD CONDUCTOR TERMINATION FIGURES ARE PER
(2) DIMENSIONS ARE IN INCHES AND TWO PLACE DECIMALS.

MIL-2049-4-65 WIR

MANNED SPACECRAFT CENTER HOUSTON, TEXAS | SIZE A | 1900975

SCALE-NONE | REV LTR B | SHEET 14 OF 17

GIC CABLE W11 B 1900975

CONDUCTOR INDIVIDUAL LENGTH NUMBER	ITEM NO. (2)	FROM CUT WIRE OR SHIELD STRIP WIRE OR JACKET CIRCUIT POINT (2)	T I N (2)	TERMINATION SPEC. (1) ITEM NO.	NO.	TO CUT WIRE OR SHIELD STRIP WIRE OR JACKET CIRCUIT POINT (2)	T I N (2)	TERMINATION SPEC. (1) ITEM NO.	NO.
A 31W		DELETED							
A 32	5	P1-GG	19N	23		P2-GG	19N	22	
A 33	6	P1-B	19N	23		E1	25N		
A 34	6	E1	25N			E2	25N		
A 35	6	E2	25N			E3	25N		
A 36	6	E3	25N			E4	25N		
A 37	6	E4	25N			E5	25N		
A 38	18		580	550	20 21 5		580	550	20 21 5
					A 19				A 19
A 38A	6	SHLD A38	25N			P1-S	19N	23	
A 38B	6	P2-S	19N	22		SHLD A38	25N		
A 38W		P1-R	19N	23		P2-R	19N	22	
A 39	24		480	450	27 28 5		480	450	A 30 7A
					A 29				
A 39A	6	SHLD A39	25N			E6	25N		
A 39L		P3-Y	19N			P2-H*	19N	22	
A 39R		P3-W	19N			P2-G*	19N	22	
A 39Y		P3-Z	19N			P2-F*	19N	22	

(1) THE STD CONDUCTOR TERMINATION FIGURES ARE PER
(2) DIMENSIONS ARE IN INCHES AND TWO PLACE DECIMALS.

MIL-2049-4-65 WIR

MANNED SPACECRAFT CENTER HOUSTON, TEXAS | SIZE A | 1900975

SCALE-NONE | REV LTR B | SHEET 15 OF 17

GIC CABLE W11 B 1900975

CONDUCTOR INDIVIDUAL LENGTH NUMBER	ITEM NO. (2)	FROM CUT WIRE OR SHIELD STRIP WIRE OR JACKET CIRCUIT POINT (2)	T I N (2)	TERMINATION SPEC. (1) ITEM NO.	NO.	TO CUT WIRE OR SHIELD STRIP WIRE OR JACKET CIRCUIT POINT (2)	T I N (2)	TERMINATION SPEC. (1) ITEM NO.	NO.
A 40	24		480	450	27 28 5		480	450	A 30 7A
					A 29				
A 40A	6	SHLD A40	25N			E6	25N		
A 40L		P3-V	19N			P2-P*	19N	22	
A 40R		P3-U	19N			P2-Y*	19N	22	
A 40Y		P3-S	19N			P2-Z*	19N	22	
A 41	3		480	450	7 8 5		480	450	A 11 7A
					A 11				
A 41A	6	SHLD A41	25N			E6	25N		
A 41L		P3-B*	19N			P2-DD	19N	22	
A 41R		P3-C*	19N			P2-CC	19N	22	
A 42	5	E6	25N			P2-N*	19N		
A 43	5	P3-B	19N			E6	25N		

(1) THE STD CONDUCTOR TERMINATION FIGURES ARE PER
(2) DIMENSIONS ARE IN INCHES AND TWO PLACE DECIMALS.

MIL-2049-4-65 WIR

MANNED SPACECRAFT CENTER HOUSTON, TEXAS | SIZE A | 1900975

SCALE-NONE | REV LTR B | SHEET 16 OF 17

REVISIONS					
SYM	ZONE	DESCRIPTION	CHG NO.	DATE	APPD.
M		SEE SHEET 1 FOR REVISION RECORD			

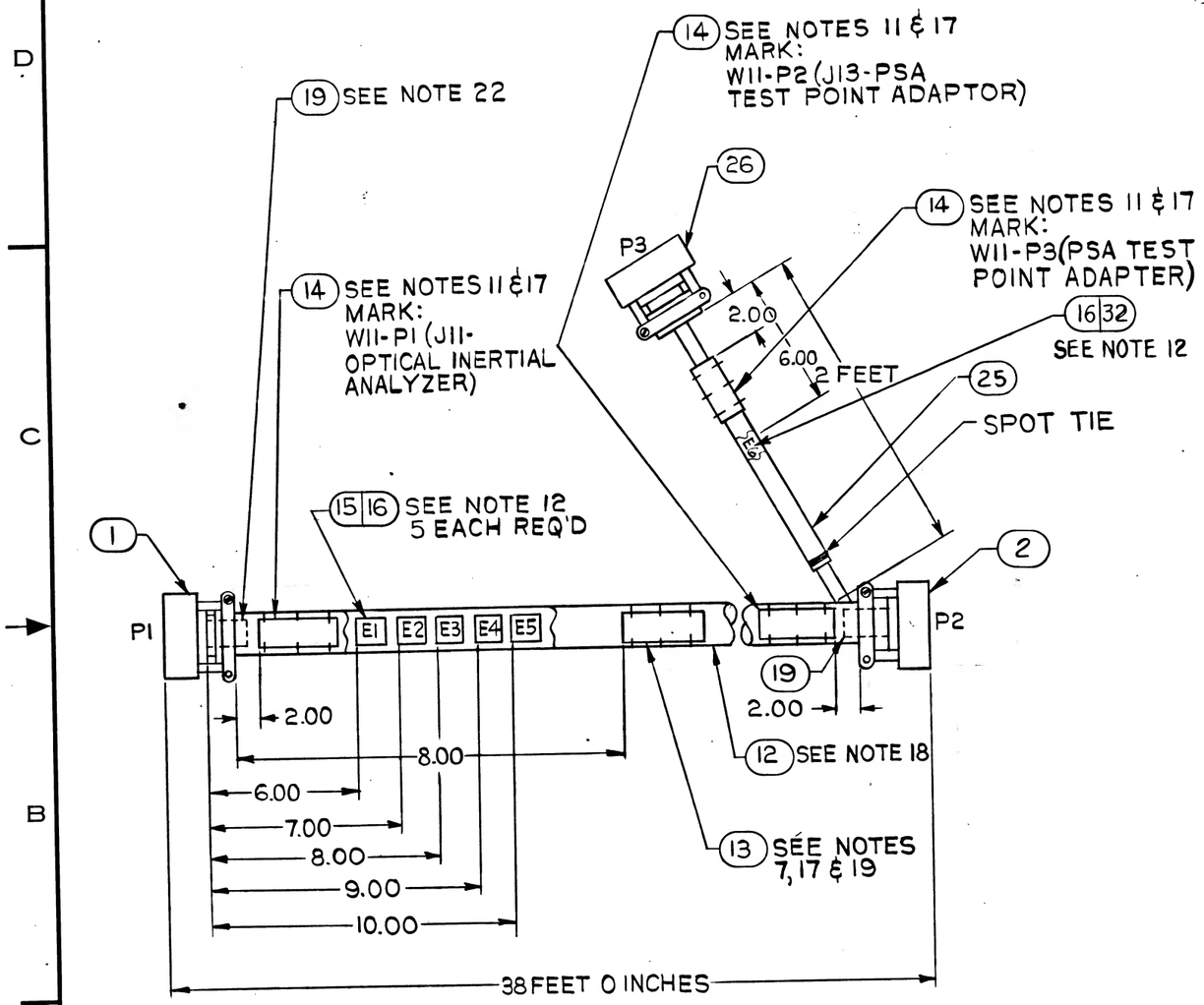

LOCATION TOLERANCE
(EXCEPT LENGTH)
± .05

1901308	1900005-011
NEXT ASSY	USED ON
APPLICATION	

UNLESS OTHERWISE SPECIFIED
DIMENSIONS ARE IN INCHES
TOLERANCES ON
FRACTIONS ± — DECIMALS ± — ANGLES ± —
DO NOT SCALE THIS DRAWING
MATERIAL —
CONTRACT NAS 9-497

AC SPARK PLUG DIVISION, GMC
MILWAUKEE, WISCONSIN
ACSP PN
DRAWN T. KOSMATKA DATE 1 NOV 63
CHECKED E.L. HINTZ 12 NOV 63
APPROVAL R.B. LEGION 13 NOV 63
APPROVAL Wehlandt 9/4/64
NASA APPROVAL 9/3/64
MIT APPROVAL D. Kabel 9/15/64

MANNED
SPACECRAFT CENTER
HOUSTON, TEXAS

CABLE INTERCONNECT W11
ISS, OSS & G&N TESTING

CODE IDENT NO. | SIZE C | 1900975
SCALE — | SHEET 17 OF 17

MIL 1077C-P

1900975

GENERAL NOTES

NOTES

1 SEE CONDUCTOR CHART

2 SEE CONDUCTOR CHART

3 INTERPRET DRAWING IN ACCORDANCE WITH STANDARDS PRESCRIBED BY MIL-D-70327.

4 MARK CONDUCTOR IDENTIFICATION ON SINGLE CONDUCTORS PER ND1002019 OMITTING ALL SUFFIX LETTERS EXCEPT A AND B.

5 SPACING OF CONDUCTOR IDENTIFICATION SHALL BE EVERY 15 INCHES MAX AND AT EACH TERMINATION.

6 SPIRALLING OF THE MARKING IS ALLOWED.

7 IDENTIFY USING DRAWING NO. AND REVISION LETTER PER MIL-STD-130 (ES-267). .12 INCH HIGH CHARACTERS BLACK.

8 Y OR N IN TINNED COLUMN INDICATES YES OR NO.

9 A LETTER WITH AN ASTERISK SUFFIX, INDICATES A LOWER CASE LETTER.

10 VENDOR ITEM - SEE SPECIFICATION CONTROL DRAWING.

11 MARK IDENTIFICATION BAND WITH REFERENCE DESIGNATION AS NOTED .12 INCH HIGH COLOR BLACK, HOT IMPRESSION STAMPING PER ND1002019. CENTRALIZE.

MANNED SPACECRAFT CENTER HOUSTON, TEXAS	SIZE A	1900975	
SCALE - NONE	REV LTR +		SHEET 2 OF 15

MIL 2084 4-63

GENERAL NOTES

NOTES

12 MARK SLEEVING WITH REFERENCE DESIGNATIONS AS SHOWN .12 INCH HIGH, COLOR BLACK PER ND1002019.

13 MARK SLEEVING OF MULTI-CONDUCTORS WITH THE CONDUCTOR NUMBER .12 INCH HIGH, COLOR BLACK, PER ND1002019 WHEN SLEEVING ITEM NUMBERS FOLLOW AN A OR T IN THE ACCESSORIES ITEM NUMBER FIELD.

14 A OR T PREFIX IN THE ACCESSORIES ITEM NUMBER COLUMN INDICATES THE READING POSITION AWAY FROM TERMINATION OR TOWARD TERMINATION RESPECTIVELY, OF THE WIRE MARKER SLEEVE.

15 THE SUFFIX LETTER OF A CONDUCTOR IDENTIFICATION NUMBER INDICATES CONDUCTOR SHIELDING, COLOR, OR MARKING.

- A - FROM END SHIELD
- L - WHITE WITH BLUE TRACER
- R - WHITE WITH RED TRACER
- W - WHITE

16 ASSEMBLE CONTACTS IN ALL CONNECTOR GROMMET HOLES

17 SECURE TO CABLE USING ITEM 17, MARKING TO READ AWAY FROM CONNECTOR.

18 SEAL ZIPPER TUBING PER ND 1002153

19 SERIALIZE PER ND 1002023

MANNED SPACECRAFT CENTER HOUSTON, TEXAS	SIZE A	1900975	
SCALE - NONE	REV LTR +		SHEET 3 OF 15

MIL 2084 4-63

FOR INFORMATION ONLY

CLASS B RELEASE TDR No. 05663 DATE 1/7/64

REVISIONS

SYM	DESCRIPTION	DATE	APPROVAL

APPLICATION

NEXT ASSY	USED ON
1900005-011	1900005-011

REV SHEET	1	2	3	4	5	6	7	8	9	10	11	12	13	14	15
REV STATUS	+	+	+	+	+	+	+	+	+	+	+	+	+	+	+
OF SHEETS															

MANNED SPACECRAFT CENTER HOUSTON, TEXAS

CABLE INTERCONNECT W11
1SS, OSS, & G&N TESTING

AC SPARK PLUG DIVISION, GMC
MILWAUKEE, WISCONSIN

ACSP PN

DRAWN DATE NOV 63
CHECKED DATE 12 NOV 63
APPROVAL DATE 13 NOV 63
APPROVAL DATE 13 NOV 63
NASA APPROVAL
MIT APPROVAL DATE 7-6-64

CODE IDENT NO. 1900975 SIZE A REV

SCALE NONE SHEET 1 OF 15

CONTRACT NAS 9-497

GENERAL NOTES

TOLERANCE CHART, UNLESS OTHERWISE SPECIFIED ---

APPLICABLE LENGTH FOR WIRE OR CABLE, STRIP WIRE, STRIP JACKET, CUT WIRE OR CUT SHIELD	TOLERANCE				
	WIRE OR CABLE	STRIP WIRE	STRIP JACKET	CUT WIRE	CUT SHIELD
UNDER 1 INCH	+ .06-.00	+.03-.00	+.06-.06	+.06-.06	+.06-.06
1 INCH TO 6 INCHES	+ .50-.00	+.06-.00	+.25-.25	+.25-.25	+.25-.25
6 INCHES TO 6 FEET	+1.00-.00		+.50-.50	+.50-.50	+.50-.50
OVER 6 FEET	+2.00-.00				

MANNED SPACECRAFT CENTER HOUSTON, TEXAS	SIZE A	1900975	
SCALE - NONE	REV LTR +		SHEET 4 OF 15

MIL 2084 4-63

INCHES 0 1 2
PHOTOGRAPHIC SCALE ONLY

GIC CABLE W11 + 1900975

CONDUCTOR INDIVIDUAL LENGTH NUMBER	ITEM NO. (2)	FROM CUT WIRE OR SHIELD STRIP WIRE OR JACKET CIRCUIT POINT (2)	TIN (2)	TERMINATION SPEC. (1) ITEM NO.	NO.	TO CUT WIRE OR SHIELD STRIP WIRE OR JACKET CIRCUIT POINT (2)	TIN (2)	TERMINATION SPEC (1) ITEM NO.	NO.
A 1	3		230 200	7 8	5		230 200	A 11	7A
				A 11					
A 1A	6	SHLD A1	22N			E1	37N		
A 1L		P1-D	22N			P2-D	22N		
A 1R		P1-C	22N			P2-C	22N		
A 2	3		230 200	7 8	5		230 200	A 11	7A
				A 11					
A 2A	6	SHLD A2	22N			E1	37N		
A 2L		P1-F	22N			P2-F	22N		
A 2R		P1-E	22N			P2-E	22N		
A 3	3		230 200	7 8	5		230 200	A 11	7A
				A 11					
A 3A	6	SHLD A3	22N			E1	37N		
A 3L		P1-H	22N			P2-H	22N		
A 3R		P1-G	22N			P2-G	22N		
A 4	3		230 200	7 8	5		230 200	A 11	7A
				A 11					
A 4A	6	SHLD A4	22N			E1	37		

(1) THE STD CONDUCTOR TERMINATION FIGURES ARE PER
(2) DIMENSIONS ARE IN INCHES AND TWO PLACE DECIMALS.

MANNED SPACECRAFT CENTER HOUSTON, TEXAS | SIZE A | 1900975
SCALE - NONE | REV LTR + | SHEET 6 OF 15

MIL 2085 - 4-63 WIR

GIC CABLE W11 + 1900975

CONDUCTOR INDIVIDUAL LENGTH NUMBER	ITEM NO. (2)	FROM CUT WIRE OR SHIELD STRIP WIRE OR JACKET CIRCUIT POINT (2)	TIN (2)	TERMINATION SPEC. (1) ITEM NO.	NO.	TO CUT WIRE OR SHIELD STRIP WIRE OR JACKET CIRCUIT POINT (2)	TIN (2)	TERMINATION SPEC (1) ITEM NO.	NO.
A 4L		P1-K	22N			P2-K	22		
A 4R		P1-J	22N			P2-J	22		
A 5	3		280 250	7 8	5		280 250	A 11	7A
				A 11					
A 5A	6	SHLD A5	22N			E1	37N		
A 5L		P1-M	22N			P2-M	22N		
A 5R		P1-L	22N			P2-L	22N		
A 6	3		280 250	7 8	5		280 250	A 11	7A
				A 11					
A 6A	6	SHLD A6	22N			E1	37N		
A 6L		P1-V	22N			P2-V	22N		
A 6R		P1-U	22N			P2-U	22N		
A 7	3		280 250	7 8	5		280 250	A 11	7A
				A 11					
A 7A	6	SHLD A7	22N			E2	37N		
A 7L		P1-FF	22N			P2-FF	22N		
A 7R		P1-EE	22N			P2-EE	22N		
A 8	4		280 250	10 9	5		280 250	A 11	7A

(1) THE STD CONDUCTOR TERMINATION FIGURES ARE PER
(2) DIMENSIONS ARE IN INCHES AND TWO PLACE DECIMALS.

MANNED SPACECRAFT CENTER HOUSTON, TEXAS | SIZE A | 1900975
SCALE - NONE | REV LTR + | SHEET 7 OF 15

MIL 2085 - 4-63 WIR

LIST OF MATERIAL

SEE NOTE	ITEM	REQ'D	PART NUMBER	DESCRIPTION
16	1	1	MS3126F22-55SW	(1897046-551) CONNECTOR PLUG
16	2	1	MS3126F22-55PW	(1897045-551) CONNECTOR PLUG
	3	1	1900975-001	WIRE ND 1002181 TYPE 2, CLASS 4, WHT JAKT, 20 AWG, WHT/BLU, WHT/RED 800 FT. TOTAL LENGTH.
	4	1	1900975-002	WIRE ND 1002181 TYPE 1, CLASS 4, WHT JAKT, 20 AWG, 880 FT. TOTAL LENGTH.
	5	1	1900975-003	WIRE ND 1002181 TYPE 1, CLASS 1, 20 AWG, 38 FT. TOTAL LENGTH.
	6	1	1900975-004	WIRE ND 1002181 TYPE 1, CLASS 1, 22 AWG, 32 FT. TOTAL LENGTH.
10	7	21	1000243-011	FERRULE, ELEC COND
10	8	21	1000242-009	FERRULE, ELEC COND
10	9	10	1000243-005	FERRULE, ELEC COND
10	10	10	1000242-004	FERRULE, ELEC COND
10	11	62	1010490-198	INSULATION, SLEEVING ELEC
	12	1	1900975-005	ZIPPER TUBING, ND 1002155, TYPE 1, PLASTIC, FLEXIBLE, 1 IN. DIA., 42 FT. TOTAL LENGTH.
10	13	1	1016128-011	BAND-IDENTIFICATION
10	14	2	1016128-041	BAND-IDENTIFICATION
10	15	5	1016006-002	SPLICE REDUCER
10	16	5	1010490-258	INSULATION-SLEEVING ELEC
	17	AR	MIL-T-713	LACING TAPE, TYPE P, CLASS 2 BLACK (ES 2732 NO.18)

MANNED SPACECRAFT CENTER HOUSTON, TEXAS | SIZE A | 1900975
SCALE - NONE | REV LTR + | SHEET 5 OF 15

MIL 2084 4-63

GIC CABLE W11 + 1900975

CONDUCTOR INDIVIDUAL LENGTH NUMBER	ITEM NO. (2)	FROM CUT WIRE OR SHIELD STRIP WIRE OR JACKET CIRCUIT POINT (2)	TIN (2)	TERMINATION SPEC. (1) ITEM NO.	NO.	TO CUT WIRE OR SHIELD STRIP WIRE OR JACKET CIRCUIT POINT (2)	TIN (2)	TERMINATION SPEC (1) ITEM NO.	NO.
				A 11					
A 8A	6	SHLD A8	22N			E2	37N		
A 8W		P1-I*	22N			P2-I*	22N		
A 9	4		330 300	10 9	5		330 300	A 11	7A
				A 11					
A 9A	6	SHLD A9	22N			E2	37N		
A 9W		P1-J*	22N			P2-J*	22N		
A 10	4		330 300	10 9	5		330 300	A 11	7A
				A 11					
A 10A	6	SHLD A10	22N			E2	37N		
A 10W		P1-K*	22N			P2-K*	22N		
A 11	4		330 300	10 9	5		330 300	A 11	7A
				A 11					
A 11A	6	SHLD A11	22N			E2	37N		
A 11W		P1-M*	22N			P2-M*	22N		
A 12	4		330 300	10 9	5		330 300	A 11	7A
				A 11					
A 12A	6	SHLD A12	22N			E2	37N		

(1) THE STD CONDUCTOR TERMINATION FIGURES ARE PER
(2) DIMENSIONS ARE IN INCHES AND TWO PLACE DECIMALS.

MANNED SPACECRAFT CENTER HOUSTON, TEXAS | SIZE A | 1900975
SCALE - NONE | REV LTR + | SHEET 8 OF 15

MIL 2085 - 4-63 WIR

INCHES 0 1 2
PHOTOGRAPHIC SCALE ONLY

GIC CABLE W11 + 1900975

CONDUCTOR NUMBER	INDIVIDUAL LENGTH ITEM NO. (2)	FROM CUT WIRE OR SHIELD STRIP WIRE OR JACKET CIRCUIT POINT (2)	TIN (2)	TERMINATION SPEC. (1) ITEM NO.	NO.	TO CUT WIRE OR SHIELD STRIP WIRE OR JACKET CIRCUIT POINT (2)	TIN (2)	TERMINATION SPEC (1) ITEM NO.	NO.
A 16L		P1-B*	22N			P2-B*	22N		
A 16R		P1-A*	22N			P2-A*	22N		
A 17	3		430 400	7 8	5		430 400	A 11	7A
				A 11					
A 17A	6	SHLD A17	22N			E3	37N		
A 17L		P1-D*	22N			P2-D*	22N		
A 17R		P1-C*	22N			P2-C*	22N		
A 18	3		430 400	7 8	5		430 400	A 11	7A
				A 11					
A 18A	6	SHLD A18	22N			E3	37N		
A 18L		P1-R*	22N			P2-R*	22N		
A 18R		P1-Q*	22N			P2-Q*	22N		
A 19	3		430 400	7 8	5		430 400	A 11	7A
				A 11					
A 19A	6	SHLD A19	22N			E4	37N		
A 19L		P1-T*	22N			P2-T*	22N		
A 19R		P1-S*	22N			P2-S*	22N		
A 20	3		430 400	7 8	5		430 400	A 11	7A

(1) THE STD CONDUCTOR TERMINATION FIGURES ARE PER
(2) DIMENSIONS ARE IN INCHES AND TWO PLACE DECIMALS.

MANNED SPACECRAFT CENTER HOUSTON, TEXAS | SIZE A | 1900975
SCALE - NONE | REV LTR + | SHEET 10 OF 15

MIL 2085 - 4-63 WIR

GIC CABLE W11 + 1900975

CONDUCTOR NUMBER	INDIVIDUAL LENGTH ITEM NO. (2)	FROM CUT WIRE OR SHIELD STRIP WIRE OR JACKET CIRCUIT POINT (2)	TIN (2)	TERMINATION SPEC. (1) ITEM NO.	NO.	TO CUT WIRE OR SHIELD STRIP WIRE OR JACKET CIRCUIT POINT (2)	TIN (2)	TERMINATION SPEC (1) ITEM NO.	NO.
				A 11					
A 20A	6	SHLD A20	22N			E4	37N		
A 20L		P1-V*	22N			P2-V*	22N		
A 20R		P1-U*	22N			P2-U*	22N		
A 21	3		480 450	7 8	5		480 450	A 11	7A
				A 11					
A 21A	6	SHLD A21	22N			E4	37N		
A 21L		P1-X*	22N			P2-X*	22N		
A 21R		P1-W*	22N			P2-W*	22N		
A 22	3		480 450	7 8	5		480 450	A 11	7A
				A 11					
A 22	6	SHLD A22	22N			E4	37N		
A 22L		P1-BB	22N			P2-BB	22N		
A 22R		P1-AA	22N			P2-AA	22N		
A 23	4		480 450	9 10	5		480 450	A 11	7A
				A 11					
A 23A	6	SHLD A23	22N			E4	37N		
A 23W		P1-A	22N			P2-A	22N		

(1) THE STD CONDUCTOR TERMINATION FIGURES ARE PER
(2) DIMENSIONS ARE IN INCHES AND TWO PLACE DECIMALS.

MANNED SPACECRAFT CENTER HOUSTON, TEXAS | SIZE A | 1900975
SCALE - NONE | REV LTR + | SHEET 11 OF 15

MIL 2085 - 4-63 WIR

GIC CABLE W11 + 1900975

CONDUCTOR NUMBER	INDIVIDUAL LENGTH ITEM NO. (2)	FROM CUT WIRE OR SHIELD STRIP WIRE OR JACKET CIRCUIT POINT (2)	TIN (2)	TERMINATION SPEC. (1) ITEM NO.	NO.	TO CUT WIRE OR SHIELD STRIP WIRE OR JACKET CIRCUIT POINT (2)	TIN (2)	TERMINATION SPEC (1) ITEM NO.	NO.
A 12W		P1-P	22N			P2-P	22N		
A 13	4		380 350	10 9	5		380 350	A 11	7A
				A 11					
A 13A	6	SHLD A13	22N			E3	37N		
A 13W		P1-N	22N			P2-N	22N		
A 14	3		380 350	8 9	5		380 350	A 11	7A
				A 11					
A 14A	6	SHLD A14	22N			E3	37N		
A 14L		P1-X	22N			P2-X	22N		
A 14R		P1-W	22N			P2-W	22N		
A 15	3		380 350	8 9	5		380 350	A 11	7A
				A 11					
A 15A	6	SHLD A15	22N			E3	37N		
A 15L		P1-Z	22N			P2-Z	22N		
A 15R		P1-Y	22N			P2-Y	22N		
A 16	3		380 350	7 8	5		380 350	A 11	7A
				A 11					
A 16A	6	SHLD A16	22N			E3	37N		

(1) THE STD CONDUCTOR TERMINATION FIGURES ARE PER
(2) DIMENSIONS ARE IN INCHES AND TWO PLACE DECIMALS.

MANNED SPACECRAFT CENTER HOUSTON, TEXAS | SIZE A | 1900975
SCALE - NONE | REV LTR + | SHEET 9 OF 15

MIL 2085 - 4-63 WIR

GIC CABLE W11 + 1900975

CONDUCTOR NUMBER	INDIVIDUAL LENGTH ITEM NO. (2)	FROM CUT WIRE OR SHIELD STRIP WIRE OR JACKET CIRCUIT POINT (2)	TIN (2)	TERMINATION SPEC. (1) ITEM NO.	NO.	TO CUT WIRE OR SHIELD STRIP WIRE OR JACKET CIRCUIT POINT (2)	TIN (2)	TERMINATION SPEC (1) ITEM NO.	NO.
A 24	3		480 450	7 8	5		480 450	A 11	7A
				A 11					
A 24A	6	SHLD A24	22N			E4	37N		
A 24L		P1-S	22N			P2-S	22N		
A 24R		P1-R	22N			P2-R	22N		
A 25	4		530 500	9 10	5		530 500	A 11	7A
				A 11					
A 25A	6	SHLD A25	22N			E5	37N		
A 25W		P1-T	22N			P2-T	22N		
A 26	3		530 500	7 8	5		530 500	A 11	7A
				A 11					
A 26A	6	SHLD A26	22N			E5	37N		
A 26L		P1-F*	22N			P2-F*	22N		
A 26R		P1-E*	22N			P2-E*	22N		
A 27	3		530 500	7 8	5		530 500	A 11	7A
				A 11					
A 27A	6	SHLD A27	22N			E5	37N		
A 27L		P1-H*	22N			P2-H*	22N		

(1) THE STD CONDUCTOR TERMINATION FIGURES ARE PER
(2) DIMENSIONS ARE IN INCHES AND TWO PLACE DECIMALS.

MANNED SPACECRAFT CENTER HOUSTON, TEXAS | SIZE A | 1900975
SCALE - NONE | REV LTR + | SHEET 12 OF 15

MIL 2085 - 4-63 WIR

INCHES 0 1 2 PHOTOGRAPHIC SCALE ONLY

GIC — CABLE W11 — + — 1900975

CONDUCTOR NUMBER	INDIVIDUAL LENGTH ITEM NO. (2)	FROM: CUT WIRE OR SHIELD / STRIP WIRE OR JACKET / CIRCUIT POINT (2)	TIN (2)	TERMINATION SPEC. (1) ITEM NO.	NO.	TO: CUT WIRE OR SHIELD / STRIP WIRE OR JACKET / CIRCUIT POINT (2)	TIN (2)	TERMINATION SPEC (1) ITEM NO.	NO.
A 27R		P1-G*	22N			P2-G*	22N		
A 28	3		530 500	7 8 5			530 500	A 11 7A	
				A 11					
A 28A	6	SHLD A28	22N			E5	22N		
A 28L		P1-P*	22N			P2-P*	22N		
A 28R		P1-N*	22N			P2-N*	22N		
A 29	3		580 550	7 8 5			580 500	A 11 7A	
				A 11					
A 29A	6	SHLD A29	22N			E5	37N		
A 29L		P1-Z*	22N			P2-Z*	22N		
A 29R		P1-Y*	22N			P2-Y*	22N		
A 30	4		580 550	9 10 5			580 550	A 11 7A	
				A 11					
A 30A	6	SHLD A30	22N			E5	37N		
A 30W		P1-CC	22N			P2-CC	22N		
A 31	4		580 550	9 10 5			580 550	A 11 7A	
				A 11					
A 31A	6	SHLD A31	22N			E5	37N		

(1) THE STD CONDUCTOR TERMINATION FIGURES ARE PER
(2) DIMENSIONS ARE IN INCHES AND TWO PLACE DECIMALS.

MANNED SPACECRAFT CENTER HOUSTON, TEXAS | SIZE A | 1900975
SCALE-NONE | REV LTR + | SHEET 13 OF 15

MIL 2085 - 4-63 WIR

GIC — CABLE W11 — + — 1900975

CONDUCTOR NUMBER	INDIVIDUAL LENGTH ITEM NO. (2)	FROM: CUT WIRE OR SHIELD / STRIP WIRE OR JACKET / CIRCUIT POINT (2)	TIN (2)	TERMINATION SPEC. (1) ITEM NO.	NO.	TO: CUT WIRE OR SHIELD / STRIP WIRE OR JACKET / CIRCUIT POINT (2)	TIN (2)	TERMINATION SPEC (1) ITEM NO.	NO.
A 31W		P1-DD	22N			P2-DD	22N		
A 32	5	P1-GG	22N			P2-GG	22N		
A 33	6	P1-B	22N			E1	37N		
A 34	6	E1	37N			E2	37N		
A 35	6	E2	37N			E3	37N		
A 36	6	E3	37N			E4	37N		
A 37	6	E4	37N			E5	37N		

(1) THE STD CONDUCTOR TERMINATION FIGURES ARE PER
(2) DIMENSIONS ARE IN INCHES AND TWO PLACE DECIMALS.

MANNED SPACECRAFT CENTER HOUSTON, TEXAS | SIZE A | 1900975
SCALE-NONE | REV LTR + | SHEET 14 OF 15

MIL 2085 - 4-63 WIR

PHOTOGRAPHIC SCALE ONLY 0 1 2 INCHES

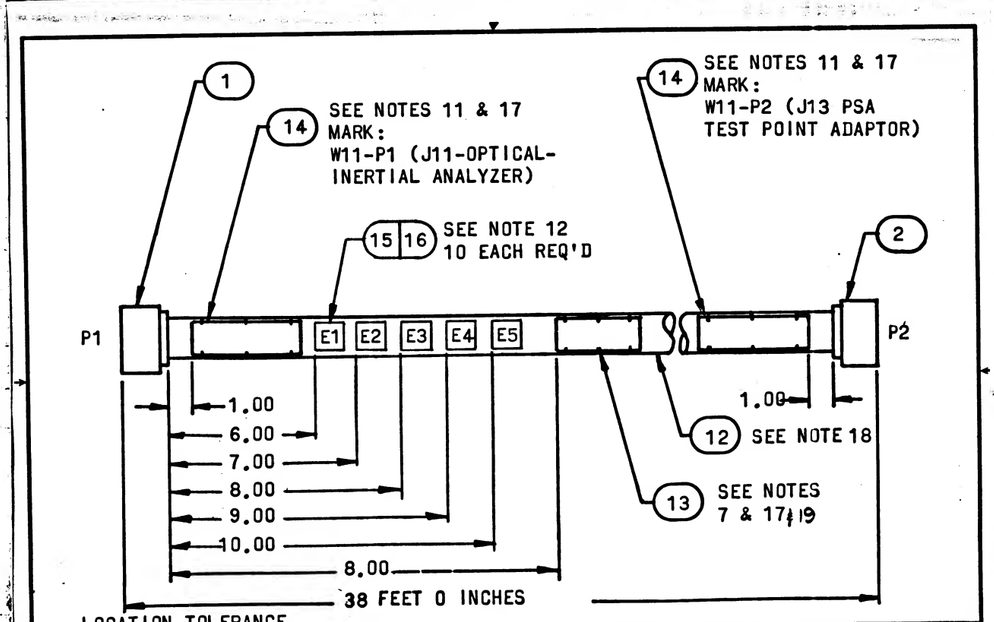

LOCATION TOLERANCE
(EXCEPT LENGTH):
+.05
-.05

MANNED SPACECRAFT CENTER HOUSTON, TEXAS | SIZE A | 1900975
SCALE-NONE | REV LTR + | SHEET 15 OF 15

MIL 2084 4-63

GENERAL NOTES

NOTES

1 SEE CONDUCTOR CHART

2 SEE CONDUCTOR CHART

3 INTERPRET DRAWING IN ACCORDANCE WITH STANDARDS PRESCRIBED BY MIL-D-70327.

4 MARK CONDUCTOR IDENTIFICATION ON SINGLE CONDUCTORS PER ND1002019 OMITTING ALL SUFFIX LETTERS EXCEPT A AND B.

5 SPACING OF CONDUCTOR IDENTIFICATION SHALL BE EVERY 15 INCHES MAX AND AT EACH TERMINATION.

6 SPIRALLING OF THE MARKING IS ALLOWED.

7 IDENTIFY USING DRAWING NO. AND REVISION LETTER PER MIL-STD-130 (ES-267). .12 INCH HIGH CHARACTERS BLACK.

8 Y OR N IN TINNED COLUMN INDICATES YES OR NO.

9 A LETTER WITH AN ASTERISK SUFFIX, INDICATES A LOWER CASE LETTER.

10 VENDOR ITEM - SEE SPECIFICATION CONTROL DRAWING.

11 MARK IDENTIFICATION BAND WITH REFERENCE DESIGNATION AS NOTED .12 INCH HIGH COLOR BLACK, HOT IMPRESSION STAMPING PER ND1002019. CENTRALIZE.

MANNED SPACECRAFT CENTER HOUSTON, TEXAS	SIZE A	1900976	
SCALE - NONE	REV LTR +		SHEET 2 OF 14

MIL 2084 4-63

GENERAL NOTES

NOTES

12 MARK SLEEVING WITH REFERENCE DESIGNATIONS AS SHOWN .12 INCH HIGH, COLOR BLACK PER ND1002019.

13 MARK SLEEVING OF MULTI-CONDUCTORS WITH THE CONDUCTOR NUMBER .12 INCH HIGH, COLOR BLACK, PER ND1002019 WHEN SLEEVING ITEM NUMBERS FOLLOW AN A OR T IN THE ACCESSORIES ITEM NUMBER FIELD.

14 A OR T PREFIX IN THE ACCESSORIES ITEM NUMBER COLUMN INDICATES THE READING POSITION AWAY FROM TERMINATION OR TOWARD TERMINATION RESPECTIVELY, OF THE WIRE MARKER SLEEVE.

15 THE SUFFIX LETTER OF A CONDUCTOR IDENTIFICATION NUMBER INDICATES CONDUCTOR SHIELDING, COLOR, OR MARKING.

A - FROM END SHIELD
L - WHITE WITH BLUE TRACER
R - WHITE WITH RED TRACER
W - WHITE

16 ASSEMBLE CONTACTS IN ALL CONNECTOR GROMMET HOLES

17 SECURE TO CABLE USING ITEM 17, MARKING TO READ AWAY FROM CONNECTOR

18 SEAL ZIPPER TUBING PER ND 1002153

19 SERIALIZE PER ND 1002023

MANNED SPACECRAFT CENTER HOUSTON, TEXAS	SIZE A	1900976	
SCALE - NONE	REV LTR +		SHEET 3 OF 14

MIL 2084 4-63

FOR INFORMATION ONLY

CLASS B RELEASE TDR No. 05663 DATE 1/7/69

APPLICATION		REVISIONS		
NEXT ASSY	USED ON	SYM	DESCRIPTION	DATE	APPROVAL
1900005-011	1900005-011				

REV														
SHEET														
REV STATUS														
OF SHEETS	SHEET	1	2	3	4	5	6	7	8	9	10	11	12	13	14
	REV	+	+	+	+	+	+	+	+	+	+	+	+	+	+

AC SPARK PLUG DIVISION, GMC
MILWAUKEE, WISCONSIN

ACSP PN

MANNED SPACECRAFT CENTER HOUSTON, TEXAS

CABLE INTERCONNECT W10
ISS, OSS & G & N TEST

DRAWN [illegible] DATE 11 NOV 63
CHECKED [illegible] DATE 12 NOV 63
APPROVAL [illegible] DATE 13 NOV 63
APPROVAL [illegible] DATE 1/3/64

CODE IDENT NO. | SIZE A | 1900976 | REV

NASA APPROVAL [illegible]
MIT APPROVAL [illegible] DATE 1/7/69

CONTRACT NAS 9-497 | SCALE NONE | SHEET 1 OF 14

GENERAL NOTES

TOLERANCE CHART, UNLESS OTHERWISE SPECIFIED ---

APPLICABLE LENGTH FOR WIRE OR CABLE, STRIP WIRE, STRIP JACKET, CUT WIRE OR CUT SHIELD	TOLERANCE				
	WIRE OR CABLE	STRIP WIRE	STRIP JACKET	CUT WIRE	CUT SHIELD
UNDER 1 INCH	+ .06-.00	+.03-.00	+.06-.06	+.06-.06	+.06-.06
1 INCH TO 6 INCHES	+ .50-.00	+.06-.00	+.25-.25	+.25-.25	+.25-.25
6 INCHES TO 6 FEET	+1.00-.00		+.50-.50	+.50-.50	+.50-.50
OVER 6 FEET	+2.00-.00				

MANNED SPACECRAFT CENTER HOUSTON, TEXAS	SIZE A	1900976	
SCALE - NONE	REV LTR +		SHEET 4 OF 14

MIL 2084 4-63

INCHES 0 1 2
PHOTOGRAPHIC SCALE ONLY

GID CABLE W10 + 1900976

CONDUCTOR NUMBER	ITEM NO.	[2]	FROM CUT WIRE OR SHIELD / STRIP WIRE OR JACKET CIRCUIT POINT	[2]	TIN [2]	TERMINATION SPEC. [1] ITEM NO.	NO.	TO CUT WIRE OR SHIELD / STRIP WIRE OR JACKET CIRCUIT POINT	[2]	TIN [2]	TERMINATION SPEC. [1] ITEM NO.	NO.
A 1	3			230	200	7 8	5		230	200	A 11	7A
						A 11						
A 1A	6		SHLD A1	37N				E1	37N			
A 1L			P1-D	22N				P2-D	22N			
A 1R			P1-C	22N				P2-C	22N			
A 2	3			230	200	7 8	5		230	200	A 11	7A
						A 11						
A 2A	6		SHLD A2	37N				E1	37N			
A 2L			P1-F	22N				P2-F	22N			
A 2R			P1-E	22N				P2-E	22N			
A 3	5		P1-H	22N				P2-H	22N			
A 4	4			230	200	9 10	5		230	200	A 11	7A
						A 11						
A 4A	6		SHLD A4	37N				E1	37N			
A 4W			P1-G	22N				P2-G	22N			
A 5	4			230	200	9 10	5		230	200	A 11	7A
						A 11						
A 5A	6		SHLD A5	37N				E1	37N			

[1] THE STD CONDUCTOR TERMINATION FIGURES ARE PER
[2] DIMENSIONS ARE IN INCHES AND TWO PLACE DECIMALS.

MANNED SPACECRAFT CENTER HOUSTON, TEXAS | SIZE A | 1900976
SCALE-NONE | REV LTR + | SHEET 6 OF 14

MIL 2085 - 4-63 WIR

GID CABLE W10 + 1900976

CONDUCTOR NUMBER	ITEM NO.	[2]	FROM CUT WIRE OR SHIELD / STRIP WIRE OR JACKET CIRCUIT POINT	[2]	TIN [2]	TERMINATION SPEC. [1] ITEM NO.	NO.	TO CUT WIRE OR SHIELD / STRIP WIRE OR JACKET CIRCUIT POINT	[2]	TIN [2]	TERMINATION SPEC. [1] ITEM NO.	NO.
A 5W			P1-J	22N				P2-J	22N			
A 6	4			280	250	9 10	5		280	250	A 11	7A
						A 11						
A 6A	6		SHLD A6	37N				E1	37N			
A 6W			P1-K	22N				P2-K	22N			
A 7	4			280	250	9 10	5		280	250	A 11	7A
						A 11						
A 7A	6		SHLD A7	37N				E1	37N			
A 7W			P1-L	22N				P2-L	22N			
A 8	4			280	250	9 10	5		280	250	A 11	7A
						A 11						
A 8A	6		SHLD A8	37N				E2	37N			
A 8W			P1-M	22N				P2-M	22N			
A 9	3			280	250	7 8	5		280	250	A 11	7A
						A 11						
A 9A	6		SHLD A9	37N				E2	37N			
A 9L			P1-V	22N				P2-V	22N			
A 9R			P1-U	22N				P2-U	22N			

[1] THE STD CONDUCTOR TERMINATION FIGURES ARE PER
[2] DIMENSIONS ARE IN INCHES AND TWO PLACE DECIMALS.

MANNED SPACECRAFT CENTER HOUSTON, TEXAS | SIZE A | 1900976
SCALE-NONE | REV LTR + | SHEET 7 OF 14

MIL 2085 - 4-63 WIR

GID CABLE W10 + 1900976

CONDUCTOR NUMBER	ITEM NO.	[2]	FROM CUT WIRE OR SHIELD / STRIP WIRE OR JACKET CIRCUIT POINT	[2]	TIN [2]	TERMINATION SPEC. [1] ITEM NO.	NO.	TO CUT WIRE OR SHIELD / STRIP WIRE OR JACKET CIRCUIT POINT	[2]	TIN [2]	TERMINATION SPEC. [1] ITEM NO.	NO.
A 10	3			330	300	7 8	5		330	300	A 11	7A
						A 11						
A 10A	6		SHLD A10	37N				E2	37N			
A 10L			P1-X	22N				P2-X	22N			
A 10R			P1-W	22N				P2-W	22N			
A 11	3			330	300	7 8	5		330	300	A 11	7A
						A 11						
A 11A	6		SHLD A11	37N				E2	37N			
A 11L			P1-Z	22N				P2-Z	22N			
A 11R			P1-Y	22N				P2-Y	22N			
A 12	3			330	300	7 8	5		330	300	A 11	7A
						A 11						
A 12A	6		SHLD A12	37N				E2	37N			
A 12L			P1-B*	22N				P2-B	22N			
A 12R			P1-A*	22N				P2-A*	22N			
A 13	3			330	300	7 8	5		330	300	A 11	7A
						A 11						
A 13A	6		SHLD A13	37N				E3	37N			

[1] THE STD CONDUCTOR TERMINATION FIGURES ARE PER
[2] DIMENSIONS ARE IN INCHES AND TWO PLACE DECIMALS.

MANNED SPACECRAFT CENTER HOUSTON, TEXAS | SIZE A | 1900976
SCALE-NONE | REV LTR + | SHEET 8 OF 14

MIL 2085 - 4-63 WIR

LIST OF MATERIAL

SEE NOTE	ITEM	REQ'D	PART NUMBER	DESCRIPTION
16	1	1	MS3126F22-55S	(1897046-550) CONNECTOR PLUG
16	2	1	MS3126F22-55P	(1897045-550) CONNECTOR PLUG
	3	1	1900976-001	WIRE ND 1002181 TYPE 2, CLASS 4, WHT JACKET, 20 AWG WHT/BLU, WHT/RED 840 FEET TOTAL LENGTH.
	4	1	1900976-002	WIRE ND 1002181 TYPE 1, CLASS 4, WHT JACKET, 20 AWG 190 FT TOTAL LENGTH
	5	1	1900976-003	WIRE ND 1002181 TYPE 1, CLASS 1, 20 AWG, 190 FT. TOTAL LENGTH.
	6	1	1900976-004	WIRE ND 1002181 TYPE 1, CLASS 1, 22 AWG 25 FT. TOTAL LENGTH.
10	7	23	1000243-011	FERRULE - ELEC COND
10	8	23	1000242-009	FERRULE - ELEC COND
10	9	4	1000243-005	FERRULE - ELEC COND
10	10	4	1000242-004	FERRULE - ELEC COND
10	11	60	1010490-198	INSULATION - SLEEVING ELEC
10	12	5	1016006-002	SPLICE REDUCER
10	13	5	1010490-258	INSULATION SLEEVING ELEC
	14	1	1900976-005	ZIPPER TUBING ND 1002155, TYPE 1, PLASTIC, FLEXIBLE, 1 IN. DIA 42 FT. TOTAL LENGTH
10	15	1	1016128-011	BAND-IDENTIFICATION
10	16	2	1016128-041	BAND-IDENTIFICATION
17	17	AR	MIL-T-713	LACING TAPE, TYPE P, CLASS 2, BLACK (ES 2732 NO.18)

MANNED SPACECRAFT CENTER HOUSTON, TEXAS | SIZE A | 1900976
SCALE-NONE | REV LTR + | SHEET 5 OF 14

MIL 2084 4-63

INCHES 0 1 2
PHOTOGRAPHIC SCALE ONLY

GID CABLE W10 + 1900976

CONDUCTOR NUMBER	INDIVIDUAL LENGTH ITEM NO.	2		FROM CUT WIRE OR SHIELD STRIP WIRE OR JACKET CIRCUIT POINT	2	T I N	2	TERMINATION SPEC. 1 ITEM NO.				NO.	TO CUT WIRE OR SHIELD STRIP WIRE OR JACKET CIRCUIT POINT	2	T I N	2	TERMINATION SPEC. 1 ITEM NO.				NO.
								A 11													
A 17A	6			SHLD A17	3	7N							E3	3	7N						
A 17L				P1-DD	2	2N							P2-DD	2	2N						
A 17R				P1-CC	2	2N							P2-CC	2	2N						
A 18	3				4	30	400	7 8						4	30	400	A 11		7A		
								A 11													
A 18A	6			SHLD A18	3	7N							E4	3	7N						
A 18L				P1-FF	2	2N							P2-FF	2	2N						
A 18R				P1-EE	2	2N							P2-EE	2	2N						
A 19	3				4	30	400	7 8						4	30	400	A 11		7A		
								A 11													
A 19A	6			SHLD A19	3	7N							E4	3	7N						
A 19L				P1-HH	2	2N							P2-HH	2	2N						
A 19R				P1-GG	2	2N							P2-GG	2	2N						
A 20	3				4	30	400	7 8						4	30	400	A 11		7A		
								A 11													
A 20A	6			SHLD A20	3	7N							E4	3	7N						
A 20L				P1-J*	2	2N							P2-J*	2	2N						

1 THE STD CONDUCTOR TERMINATION FIGURES ARE PER
2 DIMENSIONS ARE IN INCHES AND TWO PLACE DECIMALS.

MANNED SPACECRAFT CENTER HOUSTON, TEXAS | SIZE A | 1900976
SCALE - NONE | REV LTR + | SHEET 10 OF 14

MIL 2085 - 4-63 WIR

GID CABLE W10 + 1900976

CONDUCTOR NUMBER	INDIVIDUAL LENGTH ITEM NO.	2		FROM CUT WIRE OR SHIELD STRIP WIRE OR JACKET CIRCUIT POINT	2	T I N	2	TERMINATION SPEC. 1 ITEM NO.				NO.	TO CUT WIRE OR SHIELD STRIP WIRE OR JACKET CIRCUIT POINT	2	T I N	2	TERMINATION SPEC. 1 ITEM NO.				NO.
A 13L				P1-D*	2	2N							P2-D*	2	2N						
A 13R				P1-C*	2	2N							P2-C*	2	2N						
A 14	3				3	80	350	7 8		5				3	80	350	A 11		7A		
								A 11													
A 14A	6			SHLD A14	3	7N							E3	3	7N						
A 14L				P1-F*	2	2N							P2-F*	2	2N						
A 14R				P1-E*	2	2N							P2-E*	2	2N						
A 15	3				3	80	350	7 8		5				3	80	350	A 11		7A		
								A 11													
A 15A	6			SHLD A15	3	7N							E3	3	7N						
A 15L				P1-H*	2	2N							P2-H*	2	2N						
A 15R				P1-G*	2	2N							P2-G*	2	2N						
A 16	3				3	80	350	7 8		5				3	80	350	A 11		7A		
								A 11													
A 16A	6			SHLD A16	3	7N							E3	3	7N						
A 16L				P1-BB	2	2N							P2-BB	2	2N						
A 16R				P1-AA	2	2N							P2-AA	2	2N						
A 17	3				3	80	350	7 8		5				3	80	350	A 11		7A		

1 THE STD CONDUCTOR TERMINATION FIGURES ARE PER
2 DIMENSIONS ARE IN INCHES AND TWO PLACE DECIMALS.

MANNED SPACECRAFT CENTER HOUSTON, TEXAS | SIZE A | 1900976
SCALE - NONE | REV LTR + | SHEET 9 OF 14

MIL 2085 - 4-63 WIR

GID CABLE W10 + 1900976

CONDUCTOR NUMBER	INDIVIDUAL LENGTH ITEM NO.	2		FROM CUT WIRE OR SHIELD STRIP WIRE OR JACKET CIRCUIT POINT	2	T I N	2	TERMINATION SPEC. 1 ITEM NO.				NO.	TO CUT WIRE OR SHIELD STRIP WIRE OR JACKET CIRCUIT POINT	2	T I N	2	TERMINATION SPEC. 1 ITEM NO.				NO.
A 20R				P1-I*	2	2N							P2-I*	2	2N						
A 21	3				4	30	400	7 8						4	30	400	A 11		7A		
								A 11													
A 21A	6			SHLD A21	3	7N							E4	3	7N						
A 21L				P1-Z*	2	2N							P2-Z*	2	2N						
A 21R				P1-Y*	2	2N							P2-Y*	2	2N						
A 22	3				4	80	450	7 8						4	80	450	A 11		7A		
								A 11													
A 22A	6			SHLD A22	3	7N							E4	3	7N						
A 22L				P1-M*	2	2N							P2-M*	2	2N						
A 22R				P1-K*	2	2N							P2-K*	2	2N						
A 23	3				4	80	450	7 8						4	80	450	A 11		7A		
								A 11													
A 23A	6			SHLD A23									E4	3	7N						
A 23L				P1-P*	2	2N							P2-P*	2	2N						
A 23R				P1-N*									P2-N*	2	2N						
A 24	3				4	80	450	7 8		5				4	80	450	A 11		7A		
								A 11													

1 THE STD CONDUCTOR TERMINATION FIGURES ARE PER
2 DIMENSIONS ARE IN INCHES AND TWO PLACE DECIMALS.

MANNED SPACECRAFT CENTER HOUSTON, TEXAS | SIZE A | 1900976
SCALE - NONE | REV LTR + | SHEET 11 OF 14

MIL 2085 - 4-63 WIR

GID CABLE W10 + 1900976

CONDUCTOR NUMBER	INDIVIDUAL LENGTH ITEM NO.	2		FROM CUT WIRE OR SHIELD STRIP WIRE OR JACKET CIRCUIT POINT	2	T I N	2	TERMINATION SPEC. 1 ITEM NO.				NO.	TO CUT WIRE OR SHIELD STRIP WIRE OR JACKET CIRCUIT POINT	2	T I N	2	TERMINATION SPEC. 1 ITEM NO.				NO.
A 24A	6			SHLD A24	3	7N							E5	3	7N						
A 24L				P1-R*	2	2N							P2-R*	2	2N						
A 24R				P1-Q*	2	2N							P2-Q*	2	2N						
A 25	3				4	80	450	7 8						4	80	450	A 11		7A		
								A 11													
A 25A	6			SHLD A25	3	7N							E5	3	7N						
A 25L				P1-T*	2	2N							P2-T*	2	2N						
A 25R				P1-S*	2	2N							P2-S*	2	2N						
A 26	3				5	30	500	7 8						5	30	500	A 11		7A		
								A 11													
A 26A	6			SHLD A26	3	7N							E5	3	7N						
A 26L				P1-V*	2	2N							P2-V*	2	2N						
A 26R				P1-U*	2	2N							P2-U*	2	2N						
A 27	3				5	30	500	7 8						5	30	500	A 11		7A		
								A 11													
A 27A	6			SHLD A27	3	7N							E5	3	7N						
A 27L				P1-X*	2	2N							P2-X	2	2N						
A 27R				P1-W*	2	2N							P2-W	2	2N						

1 THE STD CONDUCTOR TERMINATION FIGURES ARE PER
2 DIMENSIONS ARE IN INCHES AND TWO PLACE DECIMALS.

MANNED SPACECRAFT CENTER HOUSTON, TEXAS | SIZE A | 1900976
SCALE - NONE | REV LTR + | SHEET 12 OF 14

MIL 2085 - 4-63 WIR

INCHES 0 1 2
PHOTOGRAPHIC SCALE ONLY

GID CABLE W10 + 1900976

CONDUCTOR NUMBER	INDIVIDUAL LENGTH ITEM NO.	2	FROM CUT WIRE OR SHIELD STRIP WIRE OR JACKET CIRCUIT POINT	2	TIN	2	TERMINATION SPEC. ITEM NO.	1	NO.	TO CUT WIRE OR SHIELD STRIP WIRE OR JACKET CIRCUIT POINT	2	TIN	2	TERMINATION SPEC ITEM NO.	1	NO.
A 28	5		P1-P	22	N					P2-P	22	N				
A 29	5		P1-N	22	N					P2-N	22	N				
A 30	5		P1-B	22	N					P2-B	22	N				
A 31	5		P1-A	22	N					P2-A	22	N				
A 32	3			530		500	7 8				530		500	A 11 7A		
							A 11									
A 32A	6		SHLD A32	37	N					E5	37	N				
A 32L			P1-S	22	N					P2-S	22	N				
A 32R			P1-R	22	N					P2-R	22	N				
A 33	6		P1-T	22	N					E1	37	N				
A 34	6		E1	37	N					E2	37	N				
A 35	6		E2	37	N					E3	37	N				
A 36	6		E3	37	N					E4	37	N				
A 37	6		E4	37	N					E5	37	N				

1 THE STD CONDUCTOR TERMINATION FIGURES ARE PER
2 DIMENSIONS ARE IN INCHES AND TWO PLACE DECIMALS.

MANNED SPACECRAFT CENTER HOUSTON, TEXAS | SIZE A | 1900976
SCALE - NONE | REV LTR + | SHEET 13 OF 14

MIL 2085 - 4-63 WIR

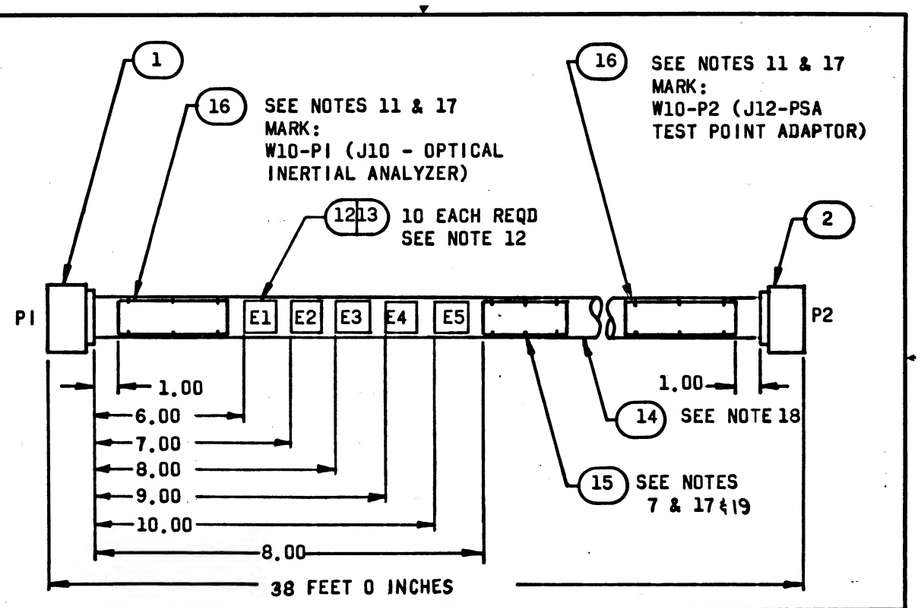

LOCATION TOLERANCE
(EXCEPT LENGTH):
+ .50
- .50

MANNED SPACECRAFT CENTER HOUSTON, TEXAS | SIZE A | 1900976
SCALE - NONE | REV LTR + | SHEET 14 OF 14

MIL 2084 4-63

PHOTOGRAPHIC SCALE ONLY
INCHES
0 1 2

GENERAL NOTES

NOTES

1 SEE CONDUCTOR CHART

2 SEE CONDUCTOR CHART

3 INTERPRET DRAWING IN ACCORDANCE WITH STANDARDS PRESCRIBED BY MIL-D-70327.

4 MARK CONDUCTOR IDENTIFICATION ON SINGLE CONDUCTORS PER ND1002019 OMITTING ALL SUFFIX LETTERS EXCEPT A AND B.

5 SPACING OF CONDUCTOR IDENTIFICATION SHALL BE EVERY 15 INCHES MAX AND AT EACH TERMINATION.

6 SPIRALLING OF THE MARKING IS ALLOWED.

7 IDENTIFY USING DRAWING NO. AND REVISION LETTER PER MIL-STD-130 (ES-267). .12 INCH HIGH CHARACTERS BLACK.

8 Y OR N IN TINNED COLUMN INDICATES YES OR NO.

9 A LETTER WITH AN ASTERISK SUFFIX, INDICATES A LOWER CASE LETTER.

10 VENDOR ITEM - SEE SPECIFICATION CONTROL DRAWING.

11 MARK IDENTIFICATION BAND WITH REFERENCE DESIGNATION AS NOTED .12 INCH HIGH COLOR BLACK, HOT IMPRESSION STAMPING PER ND1002019. CENTRALIZE.

MANNED SPACECRAFT CENTER HOUSTON, TEXAS	SIZE A	1900977	
SCALE - NONE	REV LTR +		SHEET 2 OF 17

MIL 2084 4-63

GENERAL NOTES

NOTES

12 MARK SLEEVING WITH REFERENCE DESIGNATIONS AS SHOWN .12 INCH HIGH, COLOR BLACK PER ND1002019.

13 MARK SLEEVING OF MULTI-CONDUCTORS WITH THE CONDUCTOR NUMBER .12 INCH HIGH, COLOR BLACK, PER ND1002019 WHEN SLEEVING ITEM NUMBERS FOLLOW AN A OR T IN THE ACCESSORIES ITEM NUMBER FIELD.

14 A OR T PREFIX IN THE ACCESSORIES ITEM NUMBER COLUMN INDICATES THE READING POSITION AWAY FROM TERMINATION OR TOWARD TERMINATION RESPECTIVELY, OF THE WIRE MARKER SLEEVE.

15 THE SUFFIX LETTER OF A CONDUCTOR IDENTIFICATION NUMBER INDICATES CONDUCTOR SHIELDING, COLOR, OR MARKING.

A - FROM END SHIELD
L - WHITE WITH BLUE TRACER
R - WHITE WITH RED TRACER
W - WHITE

16 ASSEMBLE CONTACTS IN ALL CONNECTOR GROMMET HOLES.

17 SECURE TO CABLE USING ITEM 19, MARKING TO READ AWAY FROM CONNECTOR.

18 SEAL ZIPPER TUBING PER ND 1002153.

19 SERIALIZE PER ND 1002023.

MANNED SPACECRAFT CENTER HOUSTON, TEXAS	SIZE A	1900977	
SCALE - NONE	REV LTR +		SHEET 3 OF 17

MIL 2084 4-63

APPLICATION

NEXT ASSY	USED ON
1900005-011	1900005-011

REVISIONS

SYM	DESCRIPTION	DATE	APPROVAL

FOR INFORMATION ONLY

CLASS B RELEASE TDR No. 05663 DATE 1/7/64

REV																
SHEET	+	+	+	+	+	+	+	+	+	+	+	+	+	+	+	+
REV STATUS																
OF SHEETS	1	2	3	4	5	6	7	8	9	10	11	12	13	14	15	16	17

MANNED SPACECRAFT CENTER HOUSTON, TEXAS

CABLE INTERCONNECT W21
ISS TESTING

AC SPARK PLUG DIVISION, GMC
MILWAUKEE, WISCONSIN

ACSP PN

DRAWN 4-10-63 DATE
CHECKED 12 NOV 63
APPROVAL 13 NOV 63
APPROVAL 1/3/64

NASA APPROVAL
MIT APPROVAL
CONTRACT NAS 9-497

CODE IDENT NO. SIZE A 1900977 REV +

SCALE - SHEET 1 OF 17

GENERAL NOTES

TOLERANCE CHART, UNLESS OTHERWISE SPECIFIED ---

APPLICABLE LENGTH FOR WIRE OR CABLE, STRIP WIRE, STRIP JACKET, CUT WIRE OR CUT SHIELD	TOLERANCE				
	WIRE OR CABLE	STRIP WIRE	STRIP JACKET	CUT WIRE	CUT SHIELD
UNDER 1 INCH	+ .06-.00	+.03-.00	+.06-.06	+.06-.06	+.06-.06
1 INCH TO 6 INCHES	+ .50-.00	+.06-.00	+.25-.25	+.25-.25	+.25-.25
6 INCHES TO 6 FEET	+1.00-.00		+.50-.50	+.50-.50	+.50-.50
OVER 6 FEET	+2.00-.00				

MANNED SPACECRAFT CENTER HOUSTON, TEXAS	SIZE A	1900977	
SCALE - NONE	REV LTR +		SHEET 4 OF 17

MIL 2084 4-63

INCHES 0 1 2
PHOTOGRAPHIC SCALE ONLY

LIST OF MATERIAL

SEE NOTE	ITEM	REQ'D	PART NUMBER	DESCRIPTION
	16	1	1900977-005	ZIPPER TUBING ND 1002155, TYPE 1, PLASTIC, FLEXIBLE, 1 INCH DIA, 40 FT. TOTAL LENGTH.
10	17	1	1016128-011	BAND IDENTIFICATION
10	18	2	1016128-041	BAND IDENTIFICATION
	19	AR	MIL-T-713	TAPE, LACING TYPE P, CLASS 2, BLACK (ES 2732 NO. 18)

MANNED SPACECRAFT CENTER HOUSTON, TEXAS	SIZE A	1900977
SCALE - NONE	REV LTR +	SHEET 6 OF 17

MIL 2084 4-63

GIE CABLE W21 + 1900977

CONDUCTOR INDIVIDUAL LENGTH NUMBER	ITEM NO. [2]	FROM CUT WIRE OR SHIELD STRIP WIRE OR JACKET CIRCUIT POINT	[2]	TIN [2]	TERMINATION SPEC. [1]	ITEM NO.	NO.	TO CUT WIRE OR SHIELD STRIP WIRE OR JACKET CIRCUIT POINT	[2]	TIN [2]	TERMINATION SPEC [1]	ITEM NO.	NO.
A 1	4		230	200	8 10	A 12	5		230	200	A 15		7A
A 1A	6	SHLD A1	37N					E1	37N				
A 1W		P1-C	22N					P2-C	22N				
A 2	3		230	200	7 9	A 11	5		230	200	A 12		7A
A 2A	6	SHLD A2	37N					E1	37N				
A 2L		P1-E	22N					P2-E	22N				
A 2R		P1-D	22N					P2-D	22N				
A 3	3		230	200	7 9	A 11	5		230	200	A 12		7A
A 3A	6	SHLD A3	37N					E1	37N				
A 3L		P1-V	22N					P2-V	22N				
A 3R		P1-U	22N					P2-U	22N				
A 4	4		680	650	8 10	A 12	5		680	650	A 15		7A
A 4A	6	SHLD A4	37N					E6	37N				
A 4W		P1-R	22N					P2-R	22N				

[1] THE STD CONDUCTOR TERMINATION FIGURES ARE PER
[2] DIMENSIONS ARE IN INCHES AND TWO PLACE DECIMALS.

MANNED SPACECRAFT CENTER HOUSTON, TEXAS	SIZE A	1900977
SCALE - NONE	REV LTR +	SHEET 7 OF 17

MIL 2085 - 4-63 WIR

LIST OF MATERIAL

SEE NOTE	ITEM	REQ'D	PART NUMBER	DESCRIPTION
16	1	1	MS3126F-22-55SY	(1897046-553) CONNECTOR-PLUG
16	2	1	MS3126F-22-55PY	(1897045-553) CONNECTOR-PLUG
	3	1	1900977-001	WIRE ND 1002181 TYPE 2, CLASS 4, WHT JACKET 20 AWG WHT/BLU WHT/RED, 380 FT. TOTAL LENGTH.
	4	1	-002	WIRE ND 1002181 TYPE 1, CLASS 4, WHT JACKET 20 AWG WHT. 1140 FT. TOTAL LENGTH.
	5	1	-003	WIRE ND 1002181 TYPE 1, CLASS 1, 20 AWG WHT, 160 FT. TOTAL LENGTH.
	6	1	-004	WIRE ND 1002181 TYPE 1, CLASS 1, 22 AWG 70 FT. TOTAL LENGTH.
10	7	10	1000243-014	FERRULE ELEC CONDUCTOR
10	8	30	1000243-005	FERRULE ELEC CONDUCTOR
10	9	10	1000242-012	FERRULE ELEC CONDUCTOR
10	10	30	1000242-004	FERRULE ELEC CONDUCTOR
10	11	10	1010490-192	INSULATION SLEEVING ELEC
10	12	40	1010490-196	INSULATION SLEEVING ELEC
10	13	6	1016006-003	SPLICE REDUCER
10	14	6	1010490-256	INSULATION SLEEVING ELEC
10	15	30	1010490-200	INSULATION SLEEVING ELEC

MANNED SPACECRAFT CENTER HOUSTON, TEXAS	SIZE A	1900977
SCALE - NONE	REV LTR +	SHEET 5 OF 17

MIL 2084 4-63

GIE CABLE W21 + 1900977

CONDUCTOR INDIVIDUAL LENGTH NUMBER	ITEM NO. [2]	FROM CUT WIRE OR SHIELD STRIP WIRE OR JACKET CIRCUIT POINT	[2]	TIN [2]	TERMINATION SPEC. [1]	ITEM NO.	NO.	TO CUT WIRE OR SHIELD STRIP WIRE OR JACKET CIRCUIT POINT	[2]	TIN [2]	TERMINATION SPEC [1]	ITEM NO.	NO.
A 5	3		230	200	7 9	A 11			230	200	A 12		7A
A 5A	6	SHLD A5	37N					E1	37N				
A 5L		P1-X	22N					P2-X	22N				
A 5R		P1-W	22N					P2-W	22N				
A 6	4		680	650	8 10	A 12	5		680	650	A 15		7A
A 6A	6	SHLD A6	37N					E6	37N				
A 6W		P1-N	22N					P2-N	22N				
A 7	3		280	250	7 9	A 11	5		280	250	A 12		7A
A 7A	6	SHLD A7	37N					E1	37N				
A 7L		P1-Z	22N					P2-Z	22N				
A 7R		P1-Y	22N					P2-Y	22N				
A 8	4		680	650	8 10	A 12	5		680	650	A 15		7A
A 8A	6	SHLD A8	37N					E6	37N				
A 8W		P1-P	22N					P2-P	22N				

[1] THE STD CONDUCTOR TERMINATION FIGURES ARE PER
[2] DIMENSIONS ARE IN INCHES AND TWO PLACE DECIMALS.

MANNED SPACECRAFT CENTER HOUSTON, TEXAS	SIZE A	1900977
SCALE - NONE	REV LTR +	SHEET 8 OF 17

MIL 2085 - 4-63 WIR

INCHES 0 1 2
PHOTOGRAPHIC SCALE ONLY

GIE CABLE W21 + 1900977

CONDUCTOR INDIVIDUAL LENGTH NUMBER	ITEM NO.	2	FROM CUT WIRE OR SHIELD STRIP WIRE OR JACKET CIRCUIT POINT	2	TIN	2	TERMINATION SPEC. 1 ITEM NO.	NO.	TO CUT WIRE OR SHIELD STRIP WIRE OR JACKET CIRCUIT POINT	2	TIN	2	TERMINATION SPEC 1 ITEM NO.	NO.
A 14W			P1-C*	22	N				P2-C*	22	N			
A 15	4			330		300	8 10	5		330		300	A 15	7A
							A 12							
A 15A	6		SHLD A15	37	N				E2	37	N			
A 15W			P1-D*	22	N				P2-D*	22	N			
A 16	4			330		300	8 10	5		330		300	A 15	7A
							A 12							
A 16A	6		SHLD A16	37	N				E2	37	N			
A 16W			P1-E*	22	N				P2-E*	22	N			
A 17	4			330		300	8 10	5		330		300	A 15	7A
							A 12							
A 17A	6		SHLD A17	37	N				E2	37	N			
A 17W			P1-F*	22	N				P2-F*	22	N			
A 18	4			380		350	8 10	5		380		350	A 15	7A
							A 12							
A 18A	6		SHLD A18	37	N				E3	37	N			
A 18W			P1-G*	22	N				P2-G*	22	N			
A 19	4			380		350	8 10	5		380		350	A 15	7A

1 THE STD CONDUCTOR TERMINATION FIGURES ARE PER
2 DIMENSIONS ARE IN INCHES AND TWO PLACE DECIMALS.

MANNED SPACECRAFT CENTER HOUSTON, TEXAS | SIZE A | 1900977

SCALE - NONE | REV LTR + | SHEET 10 OF 17

MIL 2085 - 4-63 WIR

GIE CABLE W21 + 1900977

CONDUCTOR INDIVIDUAL LENGTH NUMBER	ITEM NO.	2	FROM CUT WIRE OR SHIELD STRIP WIRE OR JACKET CIRCUIT POINT	2	TIN	2	TERMINATION SPEC. 1 ITEM NO.	NO.	TO CUT WIRE OR SHIELD STRIP WIRE OR JACKET CIRCUIT POINT	2	TIN	2	TERMINATION SPEC 1 ITEM NO.	NO.
							A 12							
A 19A	6		SHLD A19	37	N				E3	37	N			
A 19W			P1-H*	22	N				P2-H*	22	N			
A 20	4			380		300	8 10	5		380		350	A 15	7A
							A 12							
A 20A	6		SHLD A20	37	N				E3	37	N			
A 20W			P1-I*	22	N				P2-I*	22	N			
A 21	4			380		350	8 10	5		380		350	A 15	7A
							A 12							
A 21A	6		SHLD A21	37	N				E3	37	N			
A 21W			P1-J*	22	N				P2-J*	22	N			
A 22	4			430		400	8 10	5		430		400	A 15	7A
							A 12							
A 22A	6		SHLD A22	37	N				E3	37	N			
A 22W			P1-K*	22	N				P2-K*	22	N			
A 23	3			430		400	7 9	5		430		400	A 12	7A
							A 11							
A 23A	6		SHLD A23	37	N				E3	37	N			

1 THE STD CONDUCTOR TERMINATION FIGURES ARE PER
2 DIMENSIONS ARE IN INCHES AND TWO PLACE DECIMALS.

MANNED SPACECRAFT CENTER HOUSTON, TEXAS | SIZE A | 1900977

SCALE - NONE | REV LTR + | SHEET 11 OF 17

MIL 2085 - 4-63 WIR

GIE CABLE W21 + 1900977

CONDUCTOR INDIVIDUAL LENGTH NUMBER	ITEM NO.	2	FROM CUT WIRE OR SHIELD STRIP WIRE OR JACKET CIRCUIT POINT	2	TIN	2	TERMINATION SPEC. 1 ITEM NO.	NO.	TO CUT WIRE OR SHIELD STRIP WIRE OR JACKET CIRCUIT POINT	2	TIN	2	TERMINATION SPEC 1 ITEM NO.	NO.
A 9	3			280		250	7 9	5		280		250	A 12	7A
							A 11							
A 9A	6		SHLD A9	37	N				E1	37	N			
A 9L			P1-S*	22	N				P2-S*	22	N			
A 9R			P1-R*	22	N				P2-R*	22	N			
A 10	5		P1-T*	22	N				P2-T*	22	N			
A 11	5		P1-J						P2-J	22	N			
A 12	4			280		250	8 10	5		280		250	A 15	7A
							A 12							
A 12A	6		SHLD A12	37	N				E2	37	N			
A 12W			P1-A*	22	N				P2-A*	22	N			
A 13	4			280		250	8 10	5		280		250	A 15	7A
							A 12							
A 13A	6		SHLD A13	37	N				E2	37	N			
A 13W			P1-B*	22	N				P2-B*	22	N			
A 14	4			330		300	8 10	5		330		300	A 15	7A
							A 12							
A 14A	6		SHLD A14	37	N				E2	37	N			

1 THE STD CONDUCTOR TERMINATION FIGURES ARE PER
2 DIMENSIONS ARE IN INCHES AND TWO PLACE DECIMALS.

MANNED SPACECRAFT CENTER HOUSTON, TEXAS | SIZE A | 1900977

SCALE - NONE | REV LTR + | SHEET 9 OF 17

MIL 2085 - 4-63 WIR

GIE CABLE W21 + 1900977

CONDUCTOR INDIVIDUAL LENGTH NUMBER	ITEM NO.	2	FROM CUT WIRE OR SHIELD STRIP WIRE OR JACKET CIRCUIT POINT	2	TIN	2	TERMINATION SPEC. 1 ITEM NO.	NO.	TO CUT WIRE OR SHIELD STRIP WIRE OR JACKET CIRCUIT POINT	2	TIN	2	TERMINATION SPEC 1 ITEM NO.	NO.
A 23L			P1-N*	22	N				P2-N*	22	N			
A 23R			P1-M*	22	N				P2-M*	22	N			
A 24	3			430		400	7 9	5		430		400	A 12	7A
							A 11							
A 24A	6		SHLD A24	37	N				E4	37	N			
A 24L			P1-V*	22	N				P2-V*	22	N			
A 24R			P1-U*	22	N				P2-U*	22	N			
A 25	3			430		400	7 9	5		430		400	A 12	7A
							A 11							
A 25A	6		SHLD A25	37	N				E4	37	N			
A 25L			P1-H	22	N				P2-H	22	N			
A 25R			P1-G	22	N				P2-G	22	N			
A 26	3			480		450	7 9	5		480		450	A 12	7A
							A 11							
A 26A	6		SHLD A26	37	N				E4	37	N			
A 26L			P1-T	22	N				P2-T	22	N			
A 26R			P1-S	22	N				P2-S	22	N			
A 27	4			480		450	8 10			480		450	A 15	7A

1 THE STD CONDUCTOR TERMINATION FIGURES ARE PER
2 DIMENSIONS ARE IN INCHES AND TWO PLACE DECIMALS.

MANNED SPACECRAFT CENTER HOUSTON, TEXAS | SIZE A | 1900977

SCALE - NONE | REV LTR + | SHEET 12 OF 17

MIL 2085 - 4-63 WIR

INCHES 0 1 2
PHOTOGRAPHIC SCALE ONLY

GIE CABLE W21 + 1900977

CONDUCTOR INDIVIDUAL LENGTH NUMBER	ITEM NO.	2	FROM CUT WIRE OR SHIELD STRIP WIRE OR JACKET CIRCUIT POINT	2	T I N	2	TERMINATION SPEC. 1 ITEM NO.	NO.	TO CUT WIRE OR SHIELD STRIP WIRE OR JACKET CIRCUIT POINT	2	T I N	2	TERMINATION SPEC 1 ITEM NO.	NO.
A 31W			P1-DD	22N					P2-DD	22N				
A 32	4			530	500	8	10	5		530	500	A	15	7A
						A	12							
A 32A	6		SHLD A32	37N					E5	37N				
A 32W			P1-EE	22N					P2-EE	22N				
A 33	4			530	500	8	10	5		530	500	A	15	7A
						A	12							
A 33A	6		SHLD A33	37N					E5	37N				
A 33W			P1-FF	22N					P2-FF	22N				
A 34	4			580	550	8	10	5		580	550	A	15	7A
						A	12							
A 34A	6		SHLD A34	37N					E5	37N				
A 34W			P1-GG	22N					P2-GG	22N				
A 35	4			580	550	8	10	5		580	550	A	15	7A
						A	12							
A 35A	6		SHLD A35	37N					E5	37N				
A 35W			P1-HH	22N					P2-HH	22N				
A 36	4			580	500	8	10	5		580	550	A	15	7A

1 THE STD CONDUCTOR TERMINATION FIGURES ARE PER
2 DIMENSIONS ARE IN INCHES AND TWO PLACE DECIMALS.

MANNED SPACECRAFT CENTER HOUSTON, TEXAS | SIZE A | 1900977
SCALE - NONE | REV LTR + | SHEET 14 OF 17

MIL 2085 - 4-63 WIR

GIE CABLE W21 + 1900977

CONDUCTOR INDIVIDUAL LENGTH NUMBER	ITEM NO.	2	FROM CUT WIRE OR SHIELD STRIP WIRE OR JACKET CIRCUIT POINT	2	T I N	2	TERMINATION SPEC. 1 ITEM NO.	NO.	TO CUT WIRE OR SHIELD STRIP WIRE OR JACKET CIRCUIT POINT	2	T I N	2	TERMINATION SPEC 1 ITEM NO.	NO.
						A	12							
A 36A	6		SHLD A36	37N					E6	37N				
A 36W			P1-W*	22N					P2-W*	22N				
A 37	4			580	550	8	10	5		580	550	A	15	7A
						A	12							
A 37A	6		SHLD A37	37N					E6	37N				
A 37W			P1-X*	22N					P2-X*	22N				
A 38	4			630	600	8	10	5		630	600	A	15	7A
						A	12							
A 38A	6		SHLD A38	37N					E6	37N				
A 38W			P1-Y*	22N					P2-Y*	22N				
A 39	4			630	600	8	10	5		630	600	A	15	7A
						A	12							
A 39A	6		SHLD A39	37N					E6	37N				
A 39W			P1-Z*	22N					P2-Z*	22N				
A 40	4			630	600	8	10	5		630	600	A	15	7A
						A	12							
A 40A	6		SHLD A40	37N					E6	37N				

1 THE STD CONDUCTOR TERMINATION FIGURES ARE PER
2 DIMENSIONS ARE IN INCHES AND TWO PLACE DECIMALS.

MANNED SPACECRAFT CENTER HOUSTON, TEXAS | SIZE A | 1900977
SCALE - NONE | REV LTR + | SHEET 15 OF 17

MIL 2085 - 4-63 WIR

GIE CABLE W21 + 1900977

CONDUCTOR INDIVIDUAL LENGTH NUMBER	ITEM NO.	2	FROM CUT WIRE OR SHIELD STRIP WIRE OR JACKET CIRCUIT POINT	2	T I N	2	TERMINATION SPEC. 1 ITEM NO.	NO.	TO CUT WIRE OR SHIELD STRIP WIRE OR JACKET CIRCUIT POINT	2	T I N	2	TERMINATION SPEC 1 ITEM NO.	NO.
						A	12							
A 27A	6		SHLD A27	37N					E4	37N				
A 27W			P1-F	22N					P2-F	22N				
A 28	4			480	450	8	10			480	450	A	15	7A
						A	12							
A 28A	6		SHLD A28	37N					E4	37N				
A 28W			P1-AA	22N					P2-AA	22N				
A 29	4			480	450	8	10	5		480	450	A	15	7A
						A	12							
A 29A	6		SHLD A29	37N					E4	37N				
A 29W			P1-BB	22N					P2-BB	22N				
A 30	4			530	500	8	10	5		530	500	A	15	7A
						A	12							
A 30A	6		SHLD A30	37N					E5	37N				
A 30W			P1-CC	22N					P2-CC	22N				
A 31	4			530	500	8	10	5		530	500	A	15	7A
						A	12							
A 31A	6		SHLD A31	37N					E5	37N				

1 THE STD CONDUCTOR TERMINATION FIGURES ARE PER
2 DIMENSIONS ARE IN INCHES AND TWO PLACE DECIMALS.

MANNED SPACECRAFT CENTER HOUSTON, TEXAS | SIZE A | 1900977
SCALE - NONE | REV LTR + | SHEET 13 OF 17

MIL 2085 - 4-63 WIR

GIE CABLE W21 + 1900977

CONDUCTOR INDIVIDUAL LENGTH NUMBER	ITEM NO.	2	FROM CUT WIRE OR SHIELD STRIP WIRE OR JACKET CIRCUIT POINT	2	T I N	2	TERMINATION SPEC. 1 ITEM NO.	NO.	TO CUT WIRE OR SHIELD STRIP WIRE OR JACKET CIRCUIT POINT	2	T I N	2	TERMINATION SPEC 1 ITEM NO.	NO.
A 40W			P1-A	22N					P2-A	22N				
A 41	4			630	600	8	10			630	600	A	15	7A
						A	12							
A 41A	6		SHLD A41	37N					E6	37N				
A 41W			P1-K	22N					P2-K	22N				
A 42	3			680	650	7	9			680	650	A	12	7A
						A	11							
A 42A	6		SHLD A42	37N					E6	37N				
A 42L			P1-Q*	22N					P2-Q*	22N				
A 42R			P1-P*	22N					P2-P*	22N				
A 43	5		P1-L	22N					P2-L	22N				
A 44	5		P1-M	22N					P2-M	22N				
A 45	6		E1	37N					P2-B	22N				
A 46	6		E1	37N					E2	37N				
A 47	6		E2	37N					E3	37N				
A 48	6		E3	37N					E4	37N				
A 49	6		E4	37N					E5	37N				
A 50	6		E5	37N					E6	37N				

1 THE STD CONDUCTOR TERMINATION FIGURES ARE PER
2 DIMENSIONS ARE IN INCHES AND TWO PLACE DECIMALS.

MANNED SPACECRAFT CENTER HOUSTON, TEXAS | SIZE A | 1900977
SCALE - NONE | REV LTR + | SHEET 16 OF 17

MIL 2085 - 4-63 WIR

INCHES 0 1 2 PHOTOGRAPHIC SCALE ONLY

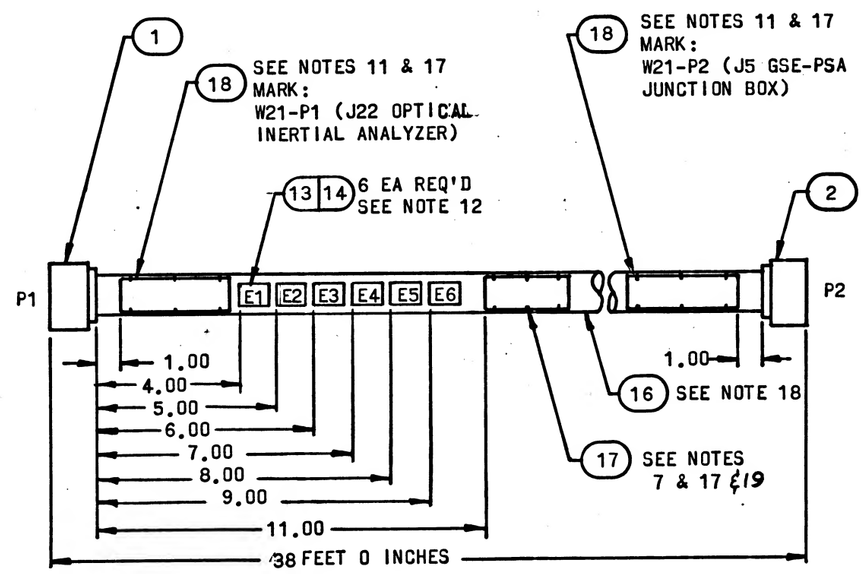

LOCATION TOLERANCE
(EXCEPT LENGTH):
+.50
-.50

MANNED SPACECRAFT CENTER HOUSTON, TEXAS	SIZE A	1900977
SCALE - NONE	REV LTR +	SHEET 17 OF 17

MIL 2084 4-63

PHOTOGRAPHIC SCALE ONLY
INCHES
0
1
2

PENNANT NOTE	GENERAL NOTES
1	SEE CONDUCTOR CHART. PENNANT NOTE 1.
2	SEE CONDUCTOR CHART. PENNANT NOTE 2.
3	INTERPRET DRAWING IN ACCORDANCE WITH STANDARDS PRESCRIBED BY MIL-D-70327.
4	MARK CONDUCTOR IDENTIFICATION ON SINGLE CONDUCTORS PER ND1002019 OMITTING ALL SUFFIX LETTERS EXCEPT A AND B.
5	SPACING OF CONDUCTOR IDENTIFICATION SHALL BE EVERY 15 INCHES MAX. AND AT EACH TERMINATION.
6	SPIRALLING OF THE MARKING IS ALLOWED.
7	IDENTIFY USING DRAWING NO. AND REVISION LETTER PER MIL-STD-130 (ES-267). .12 INCH HIGH CHARACTERS WHITE.
8	Y OR N IN TINNED COLUMN INDICATES YES OR NO.
9	A LETTER WITH AN ASTERISK SUFFIX, INDICATES A LOWER CASE LETTER.
10	VENDOR ITEM - SEE SPECIFICATION CONTROL DRAWING.
11	MARK IDENTIFICATION BAND WITH REFERENCE DESIGNATION AS NOTED .12 INCH HIGH COLOR WHITE, HOT IMPRESSION STAMPING PER ND1002019. CENTRALIZE.
12	MARK SLEEVING WITH REFERENCE DESIGNATIONS AS SHOWN .12 INCH HIGH, COLOR BLACK PER ND1002019.
13	MARK SLEEVING OF MULTI-CONDUCTORS WITH THE CONDUCTOR NUMBER .12 INCH HIGH, COLOR BLACK, PER ND1002019 WHEN SLEEVING ITEM NUMBERS FOLLOW AN A OR T IN THE ACCESSORIES ITEM NUMBER FIELD.

MANNED SPACECRAFT CENTER HOUSTON, TEXAS	SIZE A	1900978	
SCALE-NONE	REV LTR A		SHEET 2 OF 14

PENNANT NOTE	GENERAL NOTES
14	A OR T PREFIX IN THE ACCESSORIES ITEM NUMBER COLUMN INDICATES THE READING POSITION AWAY FROM TERMINATION OR TOWARD TERMINATION RESPECTIVELY, OF THE WIRE MARKER SLEEVE.
15	THE SUFFIX LETTER OF A CONDUCTOR IDENTIFICATION NUMBER INDICATES CONDUCTOR SHIELDING, COLOR, OR MARKING. A - FROM END SHIELD L - WHITE WITH BLUE TRACER R - WHITE WITH RED TRACER Y - WHITE WITH YELLOW TRACER W - WHITE
16	ASSEMBLE CONTACTS IN ALL CONNECTOR GROMMET HOLES.
17	SECURE TO CABLE USING ITEM 22. MARKING TO READ AWAY FROM CONNECTOR.
18	SEAL ZIPPER TUBING PER ND1002153
19	SERIALIZE PER ND1002023
20	ITEM 23 FURNISHED WITH ITEM 1.
21	ITEM 24 FURNISHED WITH ITEM 2.
22	ITEM 25 SHALL BE SHORTENED WHEN NECESSARY TO AVOID INTERFERENCE WITH FERRULES AND MAY BE CUT LENGTHWISE ON ONE SIDE. SELECT ONE OR MORE OF ITEM 25 AS REQUIRED TO FIT.

MANNED SPACECRAFT CENTER HOUSTON, TEXAS	SIZE A	1900978	
SCALE-NONE	REV LTR A		SHEET 3 OF 14

FOR INFORMATION ONLY

CLASS B RELEASE TDR No. 05663 DATE 1/7/64

REVISIONS			
SYM	DESCRIPTION	DATE	APPROVAL
A	CHANGE IN ACCORDANCE WITH CM193693 PER TDRR 08663	5 FEB 64	
B	CHANGE IN ACCORDANCE WITH CM 195636	20 MAR 64	
C	CHANGE IN ACCORDANCE WITH CM196882 REVISED CUSTOMER DATA (V243) REVISED PER TDRR 08664	5 MAY 64	MB

APPLICATION	
NEXT ASSY	USED ON
R01308	1900005-01

REV SHEET	A	A	B	A	A	C	B	B	B	B	A
REV STATUS / OF SHEETS	C	A	A	B	A	A	B	B	B	B	A
SHEET	1	2	3	4	5	6	7	8	9	10	11	12	13	14

AC SPARK PLUG DIVISION, GMC
MILWAUKEE, WISCONSIN

MANNED SPACECRAFT CENTER
HOUSTON, TEXAS

ACSP PN

CABLE INTERCONNECT W51
OSS TESTING

DRAWN DATE 4 NOV 63
CHECKED DATE 12 NOV 63
APPROVAL DATE 13 NOV 63
APPROVAL DATE 1/3/64

CODE IDENT NO. 1900978 SIZE A REV C

NASA APPROVAL
MIT APPROVAL
CONTRACT NAS 9-497 SCALE SHEET 1 OF 14

PENNANT NOTE	GENERAL NOTES

TOLERANCE CHART, UNLESS OTHERWISE SPECIFIED ---

APPLICABLE LENGTH FOR WIRE OR CABLE, STRIP WIRE, STRIP JACKET, CUT WIRE OR CUT SHIELD.	TOLERANCE				
	WIRE OR CABLE	STRIP WIRE	STRIP JACKET	CUT WIRE	CUT SHIELD
UNDER 1 INCH	+ .06-.00	+.03-.00	+.06-.06	+.06-.06	+.06-.06
1 INCH TO 6 INCHES	+ .50-.00	+.06-.00	+.25-.25	+.25-.25	+.25-.25
6 INCHES TO 6 FEET	+1.00-.00		+.50-.50	+.50-.50	+.50-.50
OVER 6 FEET	+2.00-.00				

MANNED SPACECRAFT CENTER HOUSTON, TEXAS	SIZE A	1900978	
SCALE-NONE	REV LTR A		SHEET 4 OF 14

GIF CABLE W51 B 1900978

PENNANT NOTE — LIST OF MATERIALS

PENNANT NOTE	ITEM	QTY	PART NO	DESCRIPTION
16	1	1	MS3126F-24-61PW (1897047-611)	CONNECTOR-PLUG
16	2	1	MS3126F-24-61SW (1897048-611)	CONNECTOR-PLUG
	3	1	1900978-001	WIRE ND1002181 TYPE 2, CLASS 4, WHT JACKET 20AWG WHT/BLU, WHT/RED 252 FT. TOTAL LENGTH
	4	1	1900978-002	WIRE ND1002181 TYPE 1, CLASS 4 WHT JACKET, 20AWG WHT 126 FT. TOTAL LENGTH
	5	1	1900978-003	WIRE ND1002181 TYPE 3, CLASS 4, WHT JACKET, 20AWG WHT/BLU, WHT/RED, WHT/YEL 54 FT. TOT. LG
	6	1	1900978-004	WIRE ND1002181 TYPE 1, CLASS 1, 20AWG WHT 36 FT TOTAL LENGTH
10	7	4	1000243-015	FERRULE, ELEC COND
10	8	4	1000242-016	FERRULE, ELEC COND
10	9	19	1010490-194	INSULATION, SLEEVING ELEC
10	10	14	1000243-011	FERRULE, ELEC COND
10	11	14	1000242-009	FERRULE, ELEC COND
10	12	7	1000243-004	FERRULE, ELEC COND
10	13	7	1000242-004	FERRULE, ELEC COND
10	14	23	1010490-196	INSULATION, SLEEVING ELEC
10	15	5	1016006-002	SPLICE REDUCER
10	16	5	1010490-258	INSULATION SLEEVING

MANNED SPACECRAFT CENTER HOUSTON, TEXAS | SIZE A | 1900978
SCALE-NONE | REV LTR B | SHEET 5 OF 14

GIF CABLE W51 A 1900978

PENNANT NOTE — LIST OF MATERIALS

PENNANT NOTE	ITEM	QTY	PART NO	DESCRIPTION
10	17	2	1016128-041	BAND IDENTIFICATION
10	18	1	1016128-011	BAND IDENTIFICATION
	19	1	1900978-005	WIRE ND1002181 TYPE 1, CLASS 1, 22AWG WHT 30 FT., TOTAL LENGTH.
10	20	7	1010490-200	INSULATION SLEEVING ELEC
	21	1	1900978-006	ZIPPER TUBING ND1002155, TYPE 1, PLASTIC FLEXIBLE 1.00 INCH DIA. 18 FT. TOTAL LENGTH
	22	AR	MIL-T-713	TAPE, LACING TYPE P, CLASS 2, BLACK (ES-2732 NO. 18)
20	23			CONTACT PINS
21	24			CONTACT SOCKETS
22	25	AR	1897147-108,-112,-116	CABLE CLAMP SLEEVE
10	26	2	1016282- 24	GROMMET

MANNED SPACECRAFT CENTER HOUSTON, TEXAS | SIZE A | 1900978
SCALE-NONE | REV LTR A | SHEET 6 OF 14

GIF CABLE W51 A 1900978

CONDUCTOR NUMBER	ITEM NO.		FROM CUT WIRE OR SHEET / STRIP WIRE OR JACKET / CIRCUIT POINT				TERMINATION SPEC. / ITEM NO.				NO.	TO CUT WIRE OR SHEET / STRIP WIRE OR JACKET / CIRCUIT POINT				TERMINATION SPEC. / ITEM NO.				NO.
A	1	3		23C		20C	10	11		5			23C		20C	A	14		7A	
							A	9												
A	1A	19	SHLD A1	22N								E1	37N							
A	1L		P1-F*	22N			23					P2-F*	22N			24				
A	1R		P1-E*	22N			23					P2-E*	22N			24				
A	2	3		23C		20C	10	11		5			23C		20C	A	14		7A	
							A	9												
A	2A	19	SHLD A2	22N								E1								
A	2L		P1-H*	22N			23					P2-H*				24				
A	2R		P1-G*	22N			23					P2-G*				24				
A	3	3		23C		20C	10	11		5			23C		20C	A	14		7A	
							A	9												
A	3A	19	SHLD A3	22N								E1	37N							
A	3L		P1-J*	22N			23					P2-J*	22N			24				
A	3R		P1-I*	22N			23					P2-I*	22N			24				
A	4	3		23C		20C	10	11		5			23C		20C	A	14		7A	
							A	9												
A	4A	19	SHLD A4	22N								E1	37N							

1 THE STD CONDUCTOR TERMINATION FIGURES ARE PER
2 DIMENSIONS ARE IN INCHES AND TWO PLACE DECIMALS.

MANNED SPACECRAFT CENTER HOUSTON, TEXAS | SIZE A | 1900978
SCALE-NONE | REV LTR A | SHEET 7 OF 14

GIF CABLE W51 C 1900978

CONDUCTOR NUMBER	ITEM NO.		FROM CUT WIRE OR SHEET / STRIP WIRE OR JACKET / CIRCUIT POINT				TERMINATION SPEC. / ITEM NO.				NO.	TO CUT WIRE OR SHEET / STRIP WIRE OR JACKET / CIRCUIT POINT				TERMINATION SPEC. / ITEM NO.				NO.
A	4L		P1-M*	22N			23					P2-M*	37N			24				
A	4R		P1-K*	22N			23					P2-K*	37N			24				
A	5	3		28C		25C	10	11		5			28C		25C	A	14		7A	
							A	9												
A	5A	19	SHLD A5	22N								E1	37N							
A	5L		P1-P*	22N			23					P2-P*	22N			24				
A	5R		P1-N*	22N			23					P2-N*	22N			24				
A	6	4		28C		25C	12	13		5			28C		25C	A	20		7A	
							A	14												
A	6A	19	SHLD A6	22N								E1	37N							
A	6R		P1-Q*	22N			23					P2-Q*	22N			24				
A	7	3		28C		25C	10	11		5			28C		25C	A	14		7A	
							A	9												
A	7A	19	SHLD A7	22N								E2	37N							
A	7L		P1-S*	22N			23					P2-S*	22N			24				
A	7R		P1-R*	22N			23					P2-R*	22N			24				
A	8	3		28C		25C	10	11		5			28C		25C	A	14		7A	
							A	9												

1 THE STD CONDUCTOR TERMINATION FIGURES ARE PER
2 DIMENSIONS ARE IN INCHES AND TWO PLACE DECIMALS.

MANNED SPACECRAFT CENTER HOUSTON, TEXAS | SIZE A | 1900978
SCALE-NONE | REV LTR C | SHEET 8 OF 14

GIF CABLE W51 B 1900978

CONDUCTOR INDIVIDUAL LENGTH NUMBER	ITEM NO. (2)		FROM CUT WIRE OR SHIELD STRIP WIRE OR JACKET CIRCUIT POINT (2)	TIN (2)	TERMINATION SPEC. (1) ITEM NO.	NO.	TO CUT WIRE OR SHIELD STRIP WIRE OR JACKET CIRCUIT POINT (2)	TIN (2)	TERMINATION SPEC. (1) ITEM NO.	NO.
A 8A	19		SHLD A8	22N			E2	37N		
A 8L			P1-U*	22N	23		P2-U*	22N	24	
A 8R			P1-T*	22N	23		P2-T*	22N	24	
A 9	5			330	300 7 8	5		330	300 7 8	5
					A 9				A 9	
A 9A	19		SHLD A9	37N			P1-W	22N	23	
A 9B	19		P2-W		24		SHLD A9	37N		
A 9L			P1-W*	22N	23		P2-W*	22N	24	
A 9R			P1-V*	22N	23		P2-V*	22N	24	
A 9Y			P1-X*	22N	23		P2-X*	22N	24	
A 10	3			330	300 10 11	5		330	300 A 14	7A
					A 9					
A 10A	19		SHLD A10	22N			E3	37N		
A 10L			P1-Z*	22N	23		P2-Z*	22N	24	
A 10R			P1-Y*	22N	23		P2-Y*	22N	24	
A 11	3			380	350 10 11			380	350 A 11	7A
					A 9					
A 11A	19		SHLD A11	22N			E3	37N		

(1) THE STD CONDUCTOR TERMINATION FIGURES ARE PER
(2) DIMENSIONS ARE IN INCHES AND TWO PLACE DECIMALS.

MANNED SPACECRAFT CENTER HOUSTON, TEXAS | SIZE A | 1900978
SCALE - NONE | REV LTR B | SHEET 9 OF 14

MIL 2049 - 4-65 WIR

GIF CABLE W51 B 1900978

CONDUCTOR INDIVIDUAL LENGTH NUMBER	ITEM NO. (2)		FROM CUT WIRE OR SHIELD STRIP WIRE OR JACKET CIRCUIT POINT (2)	TIN (2)	TERMINATION SPEC. (1) ITEM NO.	NO.	TO CUT WIRE OR SHIELD STRIP WIRE OR JACKET CIRCUIT POINT (2)	TIN (2)	TERMINATION SPEC. (1) ITEM NO.	NO.
A 11L			P1-BB	22N	23		P2-BB	37N	24	
A 11R			P1-AA	22N	23		P2-AA	37N	24	
A 12	4			380	350 12 13	5		380	350 A 20	7A
					A 14					
A 12A	19		SHLD A12	22N			E3	37N		
A 12W			P1-CC	22N	23		P2-CC	22N	24	
A 13	5			380	350 7 8	5		380	350 7 8	5
					A 9				A 9	
A 13A	19		SHLD A13	37N			P1-X	22N	23	
A 13B	19		P2-X	22N	24		SHLD A13	37N		
A 13L			P1-EE	22N	23		P2-EE	22N	24	
A 13R			P1-DD	22N	23		P2-DD	22N	24	
A 13Y			P1-FF	22N	23		P2-FF	22N	24	
A 14	3			430	400 10 11	5		430	400 A 14	7A
					A 9					
A 14A	19		SHLD A14	22			E4	37N		
A 14L			P1-HH	22N	23		P2-HH	22N	24	
A 14R			P1-GG	22N	23		P2-GG	22N	24	

(1) THE STD CONDUCTOR TERMINATION FIGURES ARE PER
(2) DIMENSIONS ARE IN INCHES AND TWO PLACE DECIMALS.

MANNED SPACECRAFT CENTER HOUSTON, TEXAS | SIZE A | 1900978
SCALE - NONE | REV LTR B | SHEET 10 OF 14

MIL 2049 - 4-65 WIR

GIF CABLE W51 B 1900978

CONDUCTOR INDIVIDUAL LENGTH NUMBER	ITEM NO. (2)		FROM CUT WIRE OR SHIELD STRIP WIRE OR JACKET CIRCUIT POINT (2)	TIN (2)	TERMINATION SPEC. (1) ITEM NO.	NO.	TO CUT WIRE OR SHIELD STRIP WIRE OR JACKET CIRCUIT POINT (2)	TIN (2)	TERMINATION SPEC. (1) ITEM NO.	NO.
A 15	4			430	400 12 13	5		430	400 A 20	7A
					A 14					
A 15A	19		SHLD A15	22N			E4	37N		
A 15W			P1-A	22N	23		P2-A	22N	24	
A 16	4			430	400 12 13	5		430	400 A 20	7A
					A 14					
A 16A	19		SHLD A16	22N			E4	37N		
A 16W			P1-C	22N	23		P2-C	22N	24	
A 17	4			480	450 12 13	5		480	450 A 20	7A
					A 14					
A 17A	19		SHLD A17	22N			E4	37N		
A 17W			P1-D	22N	23		P2-D	22N	24	
A 18	4			480	450 12 13	5		480	450 A 20	7A
					A 14					
A 18A	19		SHLD A18	22N			E4	37N		
A 18W			P1-E	22N	23		P2-E	22N	24	
A 19	4			480	450 12 13	5		480	450 A 20	7A
					A 14					

(1) THE STD CONDUCTOR TERMINATION FIGURES ARE PER
(2) DIMENSIONS ARE IN INCHES AND TWO PLACE DECIMALS.

MANNED SPACECRAFT CENTER HOUSTON, TEXAS | SIZE A | 1900978
SCALE - NONE | REV LTR B | SHEET 11 OF 14

MIL 2049 - 4-65 WIR

GIF CABLE W51 B 1900978

CONDUCTOR INDIVIDUAL LENGTH NUMBER	ITEM NO. (2)		FROM CUT WIRE OR SHIELD STRIP WIRE OR JACKET CIRCUIT POINT (2)	TIN (2)	TERMINATION SPEC. (1) ITEM NO.	NO.	TO CUT WIRE OR SHIELD STRIP WIRE OR JACKET CIRCUIT POINT (2)	TIN (2)	TERMINATION SPEC. (1) ITEM NO.	NO.
A 19A	19		SHLD A19	22N			E4	37N		
A 19W			P1-F	22N	23		P2-F	22N	24	
A 20	3			480	450 10 11	5		480	450 A 14	7A
					A 9					
A 20A	19		SHLD A20	22N			E5	37N		
A 20L			P1-H	22N	23		P2-H	22N	24	
A 20R			P1-G	22N	23		P2-G	22N	24	
A 21	3			530	500 10 11	5		530	500 A 14	7A
					A 9					
A 21A	19		SHLD A21	22N			E5	37N		
A 21L			P1-K-	22N	23		P2-K	22N	24	
A 21R			P1-J	22N	23		P2-J	22N	24	
A 22	3			530	500 10 11	5		530	500 A 14	7A
					A 9					
A 22A	19		SHLD A22	22N			E5	37N		
A 22L			P1-M	22N	23		P2-M	22N	24	
A 22R			P1-L	22N	23		P2-L	22N	24	
A 23	3			530	500 10 11	5		530	500 A 14	7A

(1) THE STD CONDUCTOR TERMINATION FIGURES ARE PER
(2) DIMENSIONS ARE IN INCHES AND TWO PLACE DECIMALS.

MANNED SPACECRAFT CENTER HOUSTON, TEXAS | SIZE A | 1900978
SCALE - NONE | REV LTR B | SHEET 12 OF 14

MIL 2049 - 4-65 WIR

GIF CABLE W51 B 1900978

CONDUCTOR NUMBER	INDIVIDUAL LENGTH ITEM NO.	3	FROM CUT WIRE OR SHIELD STRIP WIRE OR JACKET CIRCUIT POINT	3	T I N	3	TERMINATION SPEC. 1	ITEM NO.	NO.	TO CUT WIRE OR SHIELD STRIP WIRE OR JACKET CIRCUIT POINT	3	T I N	3	TERMINATION SPEC. 1	ITEM NO.	NO.
								A 9								
A 23A	19		SHLD A23		22N					E5		37N				
A 23L			P1-P		22N			23		P2-P		22N			24	
A 23R			P1-N		22N			23		P2-N		22N			24	
A 24	6		P1-R		22N			23		P2-R		22N			24	
A 25	6		P1-S		22N			23		P2-S		22N			24	
A 26	5				530		500	7 8	5			530		500	A 14	7A
								A 9								
A 26A	19		SHLD A26		22N					E5		37N				
A 26L			P1-U		22N			23		P2-U		22N			24	
A 26R			P1-T		22N			23		P2-T		22N			24	
A 26Y			P1-V		22N			23		P2-V		22N			24	
A 27	19		P1-B		22N			23		E1		22N				
A 28	19		E1		22N					E2		22N				
A 29	19		E2		22N					E3		22N				
A 30	19		E3		22N					E4		22N				
A 31	19		E4		22N					E5		22N				

1 THE STD CONDUCTOR TERMINATION FIGURES ARE PER

3 DIMENSIONS ARE IN INCHES AND TWO PLACE DECIMALS.

MANNED SPACECRAFT CENTER HOUSTON, TEXAS	SIZE A	1900978
SCALE - NONE	REV LTR B	SHEET 13 OF 14

MIL 2089 4-63 WIR

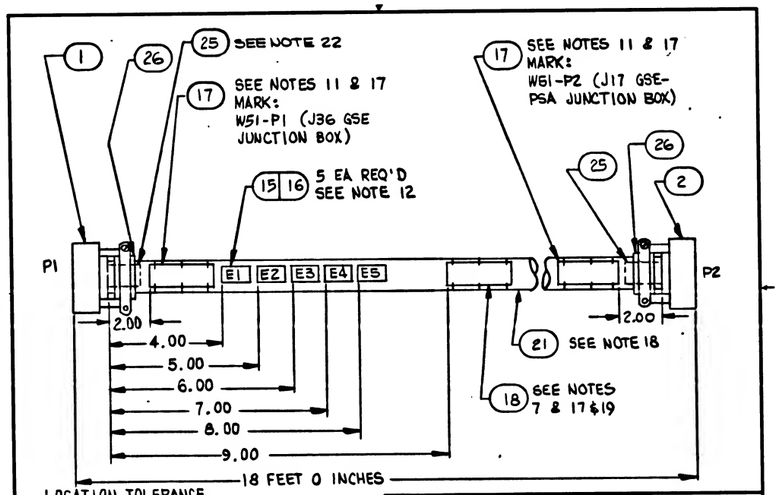

LOCATION TOLERANCE
(EXCEPT LENGTH):
+.50
-.50

MANNED SPACECRAFT CENTER HOUSTON, TEXAS	SIZE A	1900978
SCALE - NONE	REV LTR A	SHEET 4 OF 14

MIL 2089 4-63

PENNANT NOTE — GENERAL NOTES

1. SEE CONDUCTOR CHART, PENNANT NOTE 1.
2. SEE CONDUCTOR CHART, PENNANT NOTE 2.
3. INTERPRET DRAWING IN ACCORDANCE WITH STANDARDS PRESCRIBED BY MIL-D-70327.
4. MARK CONDUCTOR IDENTIFICATION ON SINGLE CONDUCTORS PER ND1002019 OMITTING ALL SUFFIX LETTERS EXCEPT A AND B.
5. SPACING OF CONDUCTOR IDENTIFICATION SHALL BE EVERY 15 INCHES MAX. AND AT EACH TERMINATION.
6. SPIRALLING OF THE MARKING IS ALLOWED.
7. IDENTIFY USING DRAWING NO. AND REVISION LETTER PER MIL-STD-130 (ES-267). .12 INCH HIGH CHARACTERS WHITE.
8. Y OR N IN TINNED COLUMN INDICATES YES OR NO.
9. A LETTER WITH AN ASTERISK SUFFIX, INDICATES A LOWER CASE LETTER.
10. VENDOR ITEM - SEE SPECIFICATION CONTROL DRAWING.
11. MARK IDENTIFICATION BAND WITH REFERENCE DESIGNATION AS NOTED .12 INCH HIGH COLOR WHITE, HOT IMPRESSION STAMPING PER ND1002019. CENTRALIZE.
12. MARK SLEEVING WITH REFERENCE DESIGNATIONS AS SHOWN .12 INCH HIGH, COLOR BLACK PER ND1002019.
13. MARK SLEEVING OF MULTI-CONDUCTORS WITH THE CONDUCTOR NUMBER .12 INCH HIGH, COLOR BLACK, PER ND1002019 WHEN SLEEVING ITEM NUMBERS FOLLOW AN A OR T IN THE ACCESSORIES ITEM NUMBER FIELD.

PENNANT NOTE — GENERAL NOTES

14. A OR T PREFIX IN THE ACCESSORIES ITEM NUMBER COLUMN INDICATES THE READING POSITION AWAY FROM TERMINATION OR TOWARD TERMINATION RESPECTIVELY, OF THE W.RE MARKER SLEEVE.
15. THE SUFFIX LETTER OF A CONDUCTOR IDENTIFICATION NUMBER INDICATES CONDUCTOR SHIELDING, COLOR, OR MARKING.
    - A - FROM END SHIELD
    - E - GRAY
    - L - WHITE WITH BLUE TRACER
    - R - WHITE WITH RED TRACER
    - X - COAX OUTER COND.
    - Y - WHITE WITH YELLOW TRACER
    - W - WHITE
16. ASSEMBLE CONTACTS IN ALL CONNECTOR GROMMET HOLES.
17. SECURE TO CABLE USING ITEM 22, MARKING TO READ AWAY FROM CONNECTOR.
18. SEAL ZIPPER TUBING PER ND1002153
19. SERIALIZE PER ND1002023
20. ITEM 23 FURNISHED WITH ITEM 1.
21. ITEM 24 FURNISHED WITH ITEM 2.
22. ITEM 25 SHALL BE SHORTENED WHEN NECESSARY TO AVOID INTERFERENCE WITH FERRULES AND MAY BE CUT LENGTHWISE ON ONE SIDE. SELECT ONE OR MORE OF ITEM 25 AS REQUIRED TO FIT.

PENNANT NOTE — GENERAL NOTES

TOLERANCE CHART, UNLESS OTHERWISE SPECIFIED ---

APPLICABLE LENGTH FOR WIRE OR CABLE, STRIP WIRE, STRIP JACKET, CUT WIRE OR CUT SHIELD.	TOLERANCE: WIRE OR CABLE	STRIP: WIRE	STRIP: JACKET	CUT: WIRE	CUT: SHIELD
UNDER 1 INCH	+ .06-.00	+.03-.00	+.06-.06	+.06-.06	+.06-.06
1 INCH TO 6 INCHES	+ .50-.00	+.06-.00	+.25-.25	+.25-.25	+.25-.25
6 INCHES TO 6 FEET	+1.00-.00		+.50-.50	+.50-.50	+.50-.50
OVER 6 FEET	+2.00-.00				

REVISIONS TDCR 05663

SYM	DESCRIPTION	DATE	APPROVAL
A	CHANGE IN ACCORDANCE WITH CM193693 PER TDRR 08663	5 FEB 64	
B	CHANGE IN ACCORDANCE WITH CM 195636	20 MAR 64	
C	CHANGE IN ACCORDANCE WITH CM196882 REVISED CUSTOMER DATA (V2-64) REVISED PER TDRR 08664	5 MAY 64	MB
D	CHANGE IN ACCORDANCE WITH CM 303155 REVISED PER TDRR 15408	6 OCT 64	JWP
E	CHANGE IN ACCORDANCE WITH CM 304513 REVISED PER TDRR 15409	6 NOV 64	JWP
F	REVISED PER CM305323 REVISED PER TDRR 15559	11 DEC 64	
—	REVISED CUSTOMERS DATA 11-64	11 DEC 64	

APPLICATION

NEXT ASSY	USED ON
901308	1900005-011

REV																	
SHEET																	
REV STATUS	F	D	E	D	F	F	D	D	D	D	D	D	D	E	E	D	
OF SHEETS	SHEET 1	2	3	4	5	6	7	8	9	10	11	12	13	14	15	16	17	18

AC SPARK PLUG DIVISION, GMC
MILWAUKEE, WISCONSIN
ACSP PN

MANNED SPACECRAFT CENTER HOUSTON, TEXAS

CABLE INTERCONNECT W51
OSS TESTING

DRAWN — DATE 4 NOV 63
CHECKED — DATE 12 NOV 63
APPROVAL — 18 NOV 63
APPROVAL — 1/3/64

NASA APPROVAL
MIT APPROVAL

CODE IDENT NO. | SIZE A | 1900978 | REV F

CONTRACT NAS 9-497 | SCALE | SHEET 1 OF 18

PENNANT LIST OF MATERIALS

NOTE	ITEM	QTY	PART NO	DESCRIPTION
10	17	2	1016128-041	BAND IDENTIFICATION
10	18	1	1016128-011	BAND IDENTIFICATION
	19	1	1900978-005	WIRE ND1002181 TYPE 1, CLASS 1, 22AWG WHT 30 FT., TOTAL LENGTH.
10	20	7	1010490-200	INSULATION SLEEVING ELEC
	21	1	1900978-006	ZIPPER TUBING ND1002155, TYPE 1, PLASTIC FLEXIBLE 1.00 INCH DIA. 18 FT. TOTAL LENGTH
	22	AR	MIL-T-713	TAPE, LACING TYPE P, CLASS 2, BLACK (ES-2732 NO. 18)
20	23			CONTACT PINS
21	24			CONTACT SOCKETS
22	25	AR	1897147-108,-112,-116	CABLE CLAMP SLEEVE
10	26	2	1016282- 24	GROMMET
	27	1	1900978-007	WIRE COAXIAL MIL-C-17/69A RG188 A/U 52 FEET TOTAL LENGTH
10	28	9	1000243-006	FERRULE ELEC. COND.
10	29	9	1000242-005	FERRULE ELEC. COND.
10	30	5	1016369-188	INNER MALE CONTACT
10	31	5	1016369-488	OUTER FEMALE CONTACT
10	32	5	1016369-588	HYRING

MANNED SPACECRAFT CENTER HOUSTON, TEXAS | SIZE A | 1900978
SCALE-NONE | REV LTR F | SHEET 6 OF 18

MIL 2084 4-63

PENNANT LIST OF MATERIALS

NOTE	ITEM	QTY	PART NO	DESCRIPTION
10	33	8	1016369-421	PIN CONTACT FEMALE
	34	2	1900978-008	TUBING MODIFIED POLYVINYL CHLORIDE FLEXIBLE, SHRINK FIT PER 1016197-007, 3 FT. LENGTH
10	35	2	1016369-141	CONNECTOR
	36	1	1902170-001	POLARIZING SHELL
	37	1	1902170-002	POLARIZING SHELL
	39	1	1900978-009	ZIPPER TUBING ND1002155 TYPE 1 PLASTIC FLEXIBLE 1 1/2 IN. DIA, 5 IN. TOT. LGTH.
10	38	2	1016006-001	SPLICE REDUCER

MANNED SPACECRAFT CENTER HOUSTON, TEXAS | SIZE A | 1900978
SCALE-NONE | REV LTR F | SHEET 7 OF 18

MIL 2084 4-63

PENNANT LIST OF MATERIALS

NOTE	ITEM	QTY	PART NO	DESCRIPTION
16	1	1	MS3126F-24-61PW (1897047-611)	CONNECTOR-PLUG
16	2	1	MS3126F-24-61SW (1897048-611)	CONNECTOR-PLUG
	3	1	1900978-001	WIRE ND1002181 TYPE 2, CLASS 4, WHT JACKET 20AWG WHT/BLU, WHT/RED 198 FT. TOTAL LENGTH
	4	1	1900978-002	WIRE ND1002181 TYPE 1, CLASS 4 WHT JACKET, 20AWG WHT 90 FT. TOTAL LENGTH
	5	1	1900978-003	WIRE ND1002181 TYPE 3, CLASS 4, WHT JACKET, 20AWG WHT/BLU, WHT/RED, WHT/YEL 24 FT. TOT. LG
	6	1	1900978-004	WIRE ND1002181 TYPE 1, CLASS 1, 20AWG WHT 36 FT TOTAL LENGTH
10	7	4	1000243-015	FERRULE, ELEC COND
10	8	4	1000242-016	FERRULE, ELEC COND
10	9	19	1010490-194	INSULATION, SLEEVING ELEC
10	10	11	1000243-011	FERRULE, ELEC COND
10	11	11	1000242-009	FERRULE, ELEC COND
10	12	4	1000243-004	FERRULE, ELEC COND
10	13	4	1000242-004	FERRULE, ELEC COND
10	14	23	1010490-196	INSULATION, SLEEVING ELEC
10	15	5	1016006-002	SPLICE REDUCER
10	16	5	1010490-258	INSULATION SLEEVING

MANNED SPACECRAFT CENTER HOUSTON, TEXAS | SIZE A | 1900978
SCALE-NONE | REV LTR E D | SHEET 5 OF 18

MIL 2084 4-63

CONDUCTOR INDIVIDUAL LENGTH NUMBER	ITEM NO.	2	FROM CUT WIRE OR SHIELD STRIP WIRE OR JACKET CIRCUIT POINT	2	T I N	2	TERMINATION SPEC. 1	ITEM NO.	NO.	TO CUT WIRE OR SHIELD STRIP WIRE OR JACKET CIRCUIT POINT	2	T I N	2	TERMINATION SPEC 1	ITEM NO.	NO.
A 1			DELETED													
			DELETED													
A 1A			DELETED													
A 1L			DELETED													
A 1R			DELETED													
A 2	3			230	200		10	11	5		230	200		A	14	7A
							A	9								
A 2A	19		SHLD A2	22N						E1						
A 2L			P1-H*	22N			23			P2-H*				24		
A 2R			P1-G*	22N			23			P2-G*				24		
A 3			DELETED													
			DELETED													
A 3A			DELETED													
A 3L			DELETED													
A 3R			DELETED													
A 4	3			230	200		10	11	5		230	200		A	14	7A
							A	9								
A 4A	19		SHLD A4	22N						E1	37N					

1 THE STD CONDUCTOR TERMINATION FIGURES ARE PER
2 DIMENSIONS ARE IN INCHES AND TWO PLACE DECIMALS.

MANNED SPACECRAFT CENTER HOUSTON, TEXAS | SIZE A | 1900978
SCALE-NONE | REV LTR E D | SHEET 8 OF 18

MIL 2085 - 4-63 WIR

GIF CABLE W51 REV D 1900978

CONDUCTOR NUMBER	INDIVIDUAL LENGTH ITEM NO. (2)	FROM CUT WIRE OR SHIELD / STRIP WIRE OR JACKET / CIRCUIT POINT (2)	TIN (2)	TERMINATION SPEC. (1) ITEM NO.	NO.	TO CUT WIRE OR SHIELD / STRIP WIRE OR JACKET / CIRCUIT POINT (2)	TIN (2)	TERMINATION SPEC (1) ITEM NO.	NO.
A 8A	19	SHLD A8	22N			E2	37N		
A 8L		P1-U*	22N	23		P2-U*	22N	24	
A 8R		P1-T*	22N	23		P2-T*	22N	24	
A 9		DELETED							
		DELETED							
A 9A		DELETED							
A 9B		DELETED							
A 9L		DELETED							
A 9R		DELETED							
A 9Y		DELETED							
A 10		DELETED							
		DELETED							
A 10A		DELETED							
A 10L		DELETED							
A 10R		DELETED							
A 11		DELETED							
		DELETED							
A 11A		DELETED							

(1) THE STD CONDUCTOR TERMINATION FIGURES ARE PER
(2) DIMENSIONS ARE IN INCHES AND TWO PLACE DECIMALS.

MANNED SPACECRAFT CENTER HOUSTON, TEXAS | SIZE A | 1900978
SCALE - NONE | REV LTR REV D | SHEET 10 OF 18

MIL 2085 - 4-63 WIR

GIF CABLE W51 REV D 1900978

CONDUCTOR NUMBER	INDIVIDUAL LENGTH ITEM NO. (2)	FROM CUT WIRE OR SHIELD / STRIP WIRE OR JACKET / CIRCUIT POINT (2)	TIN (2)	TERMINATION SPEC. (1) ITEM NO.	NO.	TO CUT WIRE OR SHIELD / STRIP WIRE OR JACKET / CIRCUIT POINT (2)	TIN (2)	TERMINATION SPEC (1) ITEM NO.	NO.
A 11L		DELETED							
A 11R		DELETED							
A 12		DELETED							
		DELETED							
A 12A		DELETED							
A 12W		DELETED							
A 13		DELETED							
		DELETED							
A 13A		DELETED							
A 13B		DELETED							
A 13L		DELETED							
A 13R		DELETED							
A 13Y		DELETED							
A 14		DELETED							
		DELETED							
A 14A		DELETED							
A 14L		DELETED							
A 14R		DELETED							

(1) THE STD CONDUCTOR TERMINATION FIGURES ARE PER
(2) DIMENSIONS ARE IN INCHES AND TWO PLACE DECIMALS.

MANNED SPACECRAFT CENTER HOUSTON, TEXAS | SIZE A | 1900978
SCALE - NONE | REV LTR REV D | SHEET 11 OF 18

MIL 2085 - 4-63 WIR

GIF CABLE W51 REV D 1900978

CONDUCTOR NUMBER	INDIVIDUAL LENGTH ITEM NO. (2)	FROM CUT WIRE OR SHIELD / STRIP WIRE OR JACKET / CIRCUIT POINT (2)	TIN (2)	TERMINATION SPEC. (1) ITEM NO.	NO.	TO CUT WIRE OR SHIELD / STRIP WIRE OR JACKET / CIRCUIT POINT (2)	TIN (2)	TERMINATION SPEC (1) ITEM NO.	NO.
A 4L		P1-M*	22N	23		P2-M*	37N	24	
A 4R		P1-K*	22N	23		P2-K*	37N	24	
A 5		DELETED							
		DELETED							
A 5A		DELETED							
A 5L		DELETED							
A 5R		DELETED							
A 6		DELETED							
		DELETED							
A 6A		DELETED							
A 6W		DELETED							
A 7	3		280	250	10 11 5 A 9		280	250	A 14 7A
A 7A	19	SHLD A7	22N			E2	37N		
A 7L		P1-S*	22N	23		P2-S*	22N	24	
A 7R		P1-R*	22N	23		P2-R*	22N	24	
A 8	3		280	250	10 11 5 A 9		280	250	A 14 7A

(1) THE STD CONDUCTOR TERMINATION FIGURES ARE PER
(2) DIMENSIONS ARE IN INCHES AND TWO PLACE DECIMALS.

MANNED SPACECRAFT CENTER HOUSTON, TEXAS | SIZE A | 1900978
SCALE - NONE | REV LTR REV D | SHEET 9 OF 18

MIL 2085 - 4-63 WIR

GIF CABLE W51 REV D 1900978

CONDUCTOR NUMBER	INDIVIDUAL LENGTH ITEM NO. (2)	FROM CUT WIRE OR SHIELD / STRIP WIRE OR JACKET / CIRCUIT POINT (2)	TIN (2)	TERMINATION SPEC. (1) ITEM NO.	NO.	TO CUT WIRE OR SHIELD / STRIP WIRE OR JACKET / CIRCUIT POINT (2)	TIN (2)	TERMINATION SPEC (1) ITEM NO.	NO.
A 15	4		430	400	12 13 5 A 14		430	400	A 20 7A
A 15A	19	SHLD A15	22N			E4	37N		
A 15W		P1-A	22N	23		P2-A	22N	24	
A 16	4		430	400	12 13 5 A 14		430	400	A 20 7A
A 16A	19	SHLD A16	22N			E4	37N		
A 16W		P1-C	22N	23		P2-C	22N	24	
A 17	4		480	450	12 13 5 A 14		480	450	A 20 7A
A 17A	19	SHLD A17	22N			E4	37N		
A 17W		P1-D	22N	23		P2-D	22N	24	
A 18	4		480	450	12 13 5 A 14		480	450	A 20 7A
A 18A	19	SHLD A18	22N			E4	37N		
A 18W		P1-E	22N	23		P2-E	22N	24	
A 19	4		480	450	12 13 5 A 14		480	450	A 20 7A

(1) THE STD CONDUCTOR TERMINATION FIGURES ARE PER
(2) DIMENSIONS ARE IN INCHES AND TWO PLACE DECIMALS.

MANNED SPACECRAFT CENTER HOUSTON, TEXAS | SIZE A | 1900978
SCALE - NONE | REV LTR REV D | SHEET 12 OF 18

MIL 2085 - 4-63 WIR

GIF CABLE W51 K D 1900978

CONDUCTOR INDIVIDUAL LENGTH NUMBER	ITEM NO. (2)	FROM CUT WIRE OR SHIELD / STRIP WIRE OR JACKET / CIRCUIT POINT (2)	TIN (2)	TERMINATION SPEC. (1) ITEM NO.	NO.	TO CUT WIRE OR SHIELD / STRIP WIRE OR JACKET / CIRCUIT POINT (2)	TIN (2)	TERMINATION SPEC (1) ITEM NO.	NO.
				A 9					
A 23A	19	SHLD A23	22N			E5	37N		
A 23L		P1-P	22N	23		P2-P	22N	24	
A 23R		P1-N	22N	23		P2-N	22N	24	
A 24	6	P1-R	22N	23		P2-R	22N	24	
A 25	6	P1-S	22N	23		P2-S	22N	24	
A 26	5		530	500 7 8	5		530	500 A 14	7A
				A 9					
A 26A	19	SHLD A26	22N			E5	37N		
A 26L		P1-U	22N	23		P2-U	22N	24	
A 26R		P1-T	22N	23		P2-T	22N	24	
A 26Y		P1-V	22N	23		P2-V	22N	24	
A 27	19	P1-B	22N	23		E1	22N		
A 28	19	E1	22N			E2	22N		
A 29	19	E2	22N			E3	22N		
A 30	19	E3	22N			E4	22N		
A 31	19	E4	22N			E5	22N		
A 32	27		230	200 28 29	5			28 29	5

(1) THE STD CONDUCTOR TERMINATION FIGURES ARE PER
(2) DIMENSIONS ARE IN INCHES AND TWO PLACE DECIMALS.

MANNED SPACECRAFT CENTER HOUSTON, TEXAS | SIZE A | 1900978
SCALE - NONE | REV LTR K D | SHEET 14 OF 18

MIL 2085 - 4-63 WIR

GIF CABLE W51 E 1900978

CONDUCTOR INDIVIDUAL LENGTH NUMBER	ITEM NO. (2)	FROM CUT WIRE OR SHIELD / STRIP WIRE OR JACKET / CIRCUIT POINT (2)	TIN (2)	TERMINATION SPEC. (1) ITEM NO.	NO.	TO CUT WIRE OR SHIELD / STRIP WIRE OR JACKET / CIRCUIT POINT (2)	TIN (2)	TERMINATION SPEC (1) ITEM NO.	NO.
				A 14				A 14	
A 32A	19	SHLD A32	37N			P1-J*	22N	23	
A 32E		P1-I*		23		P2-I*		24	
A 32X	19	P2-J*	22N	24		SHLD A32	37N		
A 33	27		230	200 28 29	5		230	200 28 29	5
				A 14				A 14	
A 33A	19	SHLD A33	37N			P1-F*	22N	23	
A 33E		P1-E*	22N	23		P2-E*	22N	24	
A 33X	19	P2-F*	22N	24		SHLD A33	37N		
A 34	27		280	250 28 29	5		56	A 14	
				A 14					
A 34A	19	SHLD A34	37N			P2-P*	22N		
A 34E		P2-N*	22N			P3-J	18	30	
A 34X		SHLD A34				P3-J SHLD	N	25 31 32	
A 35	27		330	300 7 8	5				
				7 9					
A 35A	19	SHLD A35	37N			E6	37N		
A 35L		P2-W*	22N	24		P3-F	22N	33	

(1) THE STD CONDUCTOR TERMINATION FIGURES ARE PER
(2) DIMENSIONS ARE IN INCHES AND TWO PLACE DECIMALS.

MANNED SPACECRAFT CENTER HOUSTON, TEXAS | SIZE A | 1900978
SCALE - NONE | REV LTR E | SHEET 15 OF 18

MIL 2085 - 4-63 WIR

GIF CABLE W51 K D 1900978

CONDUCTOR INDIVIDUAL LENGTH NUMBER	ITEM NO. (2)	FROM CUT WIRE OR SHIELD / STRIP WIRE OR JACKET / CIRCUIT POINT (2)	TIN (2)	TERMINATION SPEC. (1) ITEM NO.	NO.	TO CUT WIRE OR SHIELD / STRIP WIRE OR JACKET / CIRCUIT POINT (2)	TIN (2)	TERMINATION SPEC (1) ITEM NO.	NO.
A 19A	19	SHLD A19	22N			E4	37N		
A 19W		P1-F	22N	23		P2-F	22N	24	
A 20	3		480	450 10 11	5		480	450 A 14	7A
				A 9					
A 20A	19	SHLD A20	22N			E5	37N		
A 20L		P1-H	22N	23		P2-H	22N	24	
A 20R		P1-G	22N	23		P2-G	22N	24	
A 21	3		530	500 10 11	5		530	500 A 14	7A
				A 9					
A 21A	19	SHLD A21	22N			E5	37N		
A 21L		P1-K	22N	23		P2-K	22N	24	
A 21R		P1-J	22N	23		P2-J	22N	24	
A 22	3		530	500 10 11	5		530	500 A 14	7A
				A 9					
A 22A	19	SHLD A22	22N			E5	37N		
A 22L		P1-M	22N	23		P2-M	22N	24	
A 22R		P1-L	22N	23		P2-L	22N	24	
A 23	3		530	500 10 11	5		530	500 A 14	7A

(1) THE STD CONDUCTOR TERMINATION FIGURES ARE PER
(2) DIMENSIONS ARE IN INCHES AND TWO PLACE DECIMALS.

MANNED SPACECRAFT CENTER HOUSTON, TEXAS | SIZE A | 1900978
SCALE - NONE | REV LTR K D | SHEET 13 OF 18

MIL 2085 - 4-63 WIR

GIF CABLE W51 E 1900978

CONDUCTOR INDIVIDUAL LENGTH NUMBER	ITEM NO. (2)	FROM CUT WIRE OR SHIELD / STRIP WIRE OR JACKET / CIRCUIT POINT (2)	TIN (2)	TERMINATION SPEC. (1) ITEM NO.	NO.	TO CUT WIRE OR SHIELD / STRIP WIRE OR JACKET / CIRCUIT POINT (2)	TIN (2)	TERMINATION SPEC (1) ITEM NO.	NO.
A 35R		P2-V*	22N	24		P3-E	22N	33	
A 35Y		P2-X*	22N	24		E6	37N		
A 36	19	E6	37N			P3-B	22N	33	
A 37	19	P2-Q*	22N	24		P3-M	22N	33	
A 38	27		330	300 28 29	5		56	A 14	
				A 14					
A 38A	19	SHLD A38	37N			P2-Z*	22N	24	
A 38E		P2-Y*	22N	24		P3-D	18	30	
A 38X		SHLD A38	37N			P3-D SHLD	N	25 31 32	
A 39	19	P2-CC	22N	24	5	P4-H	22N	33	
A 40	27		330	300 28 29			56	A 14	
				A 14					
A 40A	19	SHLD A40	37N			P2-BB	22N	24	
A 40E		P2-AA	22N	24		P4-M	18	30	
A 40X		SHLD A40				P4-M SHLD	N	25 31 32	
A 41	5		380	350 7 8	5		380	350 A 14	7A
				A 9					
A 41A	19	SHLD A41	37N			E7	37N		

(1) THE STD CONDUCTOR TERMINATION FIGURES ARE PER
(2) DIMENSIONS ARE IN INCHES AND TWO PLACE DECIMALS.

MANNED SPACECRAFT CENTER HOUSTON, TEXAS | SIZE A | 1900978
SCALE - NONE | REV LTR E | SHEET 16 OF 18

MIL 2085 - 4-63 WIR

GIF

CABLE W51

E 1900978

CONDUCTOR NUMBER	INDIVIDUAL LENGTH ITEM NO. [2]	FROM CUT WIRE OR SHIELD STRIP WIRE OR JACKET CIRCUIT POINT [2]	TIN [2]	TERMINATION SPEC. [1] ITEM NO.	NO.	TO CUT WIRE OR SHIELD STRIP WIRE OR JACKET CIRCUIT POINT [2]	TIN [2]	TERMINATION SPEC [1] ITEM NO.	NO.
A 41L		P2-EE	22N	24		P4-B	22N	33	
A 41R		P2-DD	22N	24		P4-F	22N	33	
A 41Y		P2-FF	22N	24		E7	37N		
A 42		E7	37N			P4-J	22N	33	
A 43	27		430 400	28 29	5		56	A 14	
				A 14					
A 43A	19	SHLD A43	37N			P2-HH	22N	24	
A 43E		P2-GG	22N	24		P4-E	18	30	
A 43X		SHLD A43				P4-E SHLD	N	25 31 32	
A 44	27		430 400	28 29	5		56	A 14	
				A 14					
A 44A	19	SHLD A44	37N			P2-C*	22N	24	
A 44E		P2-B*	22N	24		P4-D	18	30	
A 44X		SHLD A44				P4-D SHLD	N	25 31 32	

[1] THE STD CONDUCTOR TERMINATION FIGURES ARE PER

[2] DIMENSIONS ARE IN INCHES AND TWO PLACE DECIMALS.

MANNED SPACECRAFT CENTER HOUSTON, TEXAS

SIZE A

1900978

SCALE - NONE

REV LTR E

SHEET 17 OF 18

MIL 2085 - 4-63 WIR

REVISIONS					
SYM	ZONE	DESCRIPTION	CHG NO.	DATE	APPD.
D		CHANGE IN ACCORDANCE WITH CM 303155 REVISED PER TDRR 15408		8 OCT 64	JWP

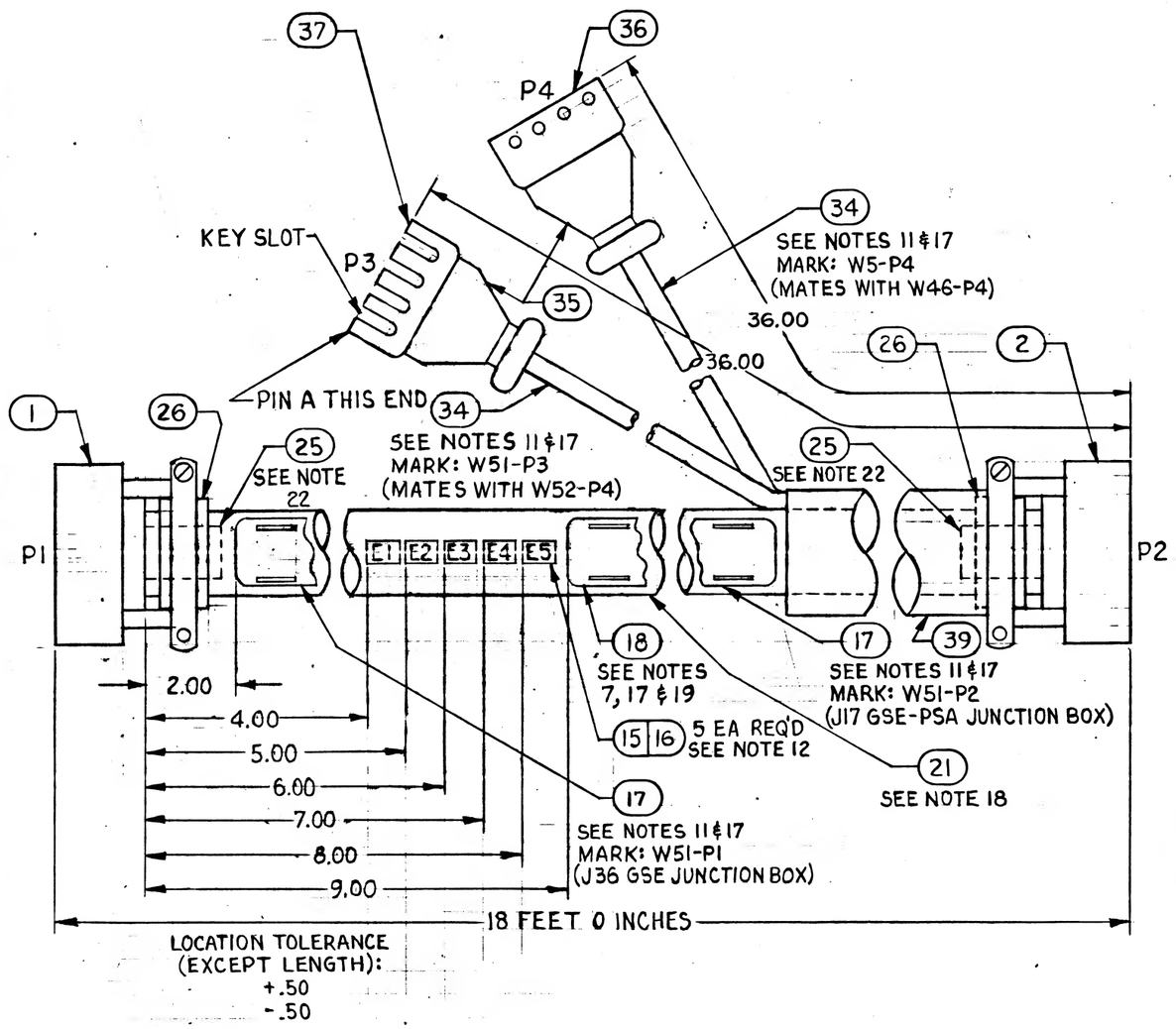

NEXT ASSY	USED ON
APPLICATION	

UNLESS OTHERWISE SPECIFIED
DIMENSIONS ARE IN INCHES
TOLERANCES ON

FRACTIONS	DECIMALS	ANGLES
+	+	+
−	−	−

DO NOT SCALE THIS DRAWING

MATERIAL

CONTRACT NAS 9-497

AC SPARK PLUG DIVISION, GMC
MILWAUKEE, WISCONSIN

ACSP PN

		DATE
DRAWN	R.G. OLSON	4 NOV 63
CHECKED	E.L. HINTZ	12 NOV 63
APPROVAL	R.B. LIGON	13 NOV 63
APPROVAL	D. M. Watson	1-5-65
NASA APPROVAL		
MIT APPROVAL		

MANNED
SPACECRAFT CENTER
HOUSTON, TEXAS

CABLE INTERCONNECT W51
OSS TESTING

CODE IDENT NO.

SIZE C

1900978

SCALE NONE

SHEET 18 OF 18

MIL 1077C—P

GENERAL NOTES

NOTES

1 SEE CONDUCTOR CHART

2 SEE CONDUCTOR CHART

3 INTERPRET DRAWING IN ACCORDANCE WITH STANDARDS PRESCRIBED BY MIL-D-70327.

4 MARK CONDUCTOR IDENTIFICATION ON SINGLE CONDUCTORS PER ND1002019 OMITTING ALL SUFFIX LETTERS EXCEPT A AND B.

5 SPACING OF CONDUCTOR IDENTIFICATION SHALL BE EVERY 15 INCHES MAX AND AT EACH TERMINATION.

6 SPIRALLING OF THE MARKING IS ALLOWED.

7 IDENTIFY USING DRAWING NO. AND REVISION LETTER PER MIL-STD-130 (ES-267). .12 INCH HIGH CHARACTERS BLACK.

8 Y OR N IN TINNED COLUMN INDICATES YES OR NO.

9 A LETTER WITH AN ASTERISK SUFFIX, INDICATES A LOWER CASE LETTER.

10 VENDOR ITEM - SEE SPECIFICATION CONTROL DRAWING.

11 MARK IDENTIFICATION BAND WITH REFERENCE DESIGNATION AS NOTED .12 INCH HIGH COLOR BLACK, HOT IMPRESSION STAMPING PER ND1002019. CENTRALIZE.

MANNED SPACECRAFT CENTER HOUSTON, TEXAS	SIZE A	1900978	
SCALE - NONE	REV LTR +		SHEET 2 OF 14

MIL 2084 4-63

GENERAL NOTES

NOTES

12 MARK SLEEVING WITH REFERENCE DESIGNATIONS AS SHOWN .12 INCH HIGH, COLOR BLACK PER ND1002019.

13 MARK SLEEVING OF MULTI-CONDUCTORS WITH THE CONDUCTOR NUMBER .12 INCH HIGH, COLOR BLACK, PER ND1002019 WHEN SLEEVING ITEM NUMBERS FOLLOW AN A OR T IN THE ACCESSORIES ITEM NUMBER FIELD.

14 A OR T PREFIX IN THE ACCESSORIES ITEM NUMBER COLUMN INDICATES THE READING POSITION AWAY FROM TERMINATION OR TOWARD TERMINATION RESPECTIVELY, OF THE WIRE MARKER SLEEVE.

15 THE SUFFIX LETTER OF A CONDUCTOR IDENTIFICATION NUMBER INDICATES CONDUCTOR SHIELDING, COLOR, OR MARKING.

A - FROM END SHIELD
L - WHITE WITH BLUE TRACER
R - WHITE WITH RED TRACER
Y - WHITE WITH YELLOW TRACER
W - WHITE

16 ASSEMBLE CONTACTS IN ALL CONNECTOR GROMMET HOLES.

17 SECURE TO CABLE USING ITEM 22. MARKING TO READ AWAY FROM CONNECTOR.

18 SEAL ZIPPER TUBING PER ND 1002153.

19 SERIALIZE PER ND 1002023.

MANNED SPACECRAFT CENTER HOUSTON, TEXAS	SIZE A	1900978	
SCALE - NONE	REV LTR +		SHEET 3 OF 14

MIL 2084 4-63

REVISIONS				
APPLICATION		SYM	DESCRIPTION	DATE	APPROVAL
NEXT ASSY	USED ON				
1900005-011	1900005-011				

FOR INFORMATION ONLY

CLASS B RELEASE TDR No. 05663 DATE 1/7/64

REV													
SHEET													
REV STATUS	+	+	+	+	+	+	+	+	+	+	+	+	+
OF SHEETS	SHEET 1	2	3	4	5	6	7	8	9	10	11	12	13	14

AC SPARK PLUG DIVISION, GMC
MILWAUKEE, WISCONSIN

MANNED SPACECRAFT CENTER
HOUSTON, TEXAS

ACSP PN

DRAWN — DATE 4 NOV 63
CHECKED — DATE 12 NOV 63
APPROVAL — DATE 13 NOV 63
APPROVAL — DATE 1/3/64

CABLE INTERCONNECT W51
OSS TESTING

NASA APPROVAL
MIT APPROVAL
CONTRACT NAS 9-497

CODE IDENT NO. | SIZE A | 1900978 | REV +

SCALE | SHEET 1 OF 14

GENERAL NOTES

TOLERANCE CHART, UNLESS OTHERWISE SPECIFIED ---

APPLICABLE LENGTH FOR WIRE OR CABLE, STRIP WIRE, STRIP JACKET, CUT WIRE OR CUT SHIELD	TOLERANCE				
	WIRE OR CABLE	STRIP WIRE	STRIP JACKET	CUT WIRE	CUT SHIELD
UNDER 1 INCH	+ .06-.00	+.03-.00	+.06-.06	+.06-.06	+.06-.06
1 INCH TO 6 INCHES	+ .50-.00	+.06-.00	+.25-.25	+.25-.25	+.25-.25
6 INCHES TO 6 FEET	+1.00-.00		+.50-.50	+.50-.50	+.50-.50
OVER 6 FEET	+2.00-.00				

MANNED SPACECRAFT CENTER HOUSTON, TEXAS	SIZE A	1900978	
SCALE - NONE	REV LTR +		SHEET 4 OF 14

MIL 2084 4-63

INCHES 0 1 2
PHOTOGRAPHIC SCALE ONLY

LIST OF MATERIAL

SEE NOTE	ITEM	REQ'D	PART NUMBER	DESCRIPTION
	19	1	1900978-005	WIRE ND 1002181 TYPE 1, CLASS 1, 22 AWG WHT 30 FT., TOTAL LENGTH.
10	20	7	1010490-200	INSULATION SLEEVING ELEC
	21	1	1900978-006	ZIPPER TUBING ND 1002155, TYPE 1, PLASTIC FLEXIBLE, 7/8 INCH DIA 18 FT. TOTAL LENGTH
	22	AR	MIL-T-713	TAPE, LACING TYPE P, CLASS 2, BLACK (ES 2732 NO.18)

MANNED SPACECRAFT CENTER HOUSTON, TEXAS	SIZE A	1900978
SCALE-NONE	REV LTR +	SHEET 6 OF 14

MIL 2084 4-63

GIF CABLE W51 + 1900978

CONDUCTOR INDIVIDUAL LENGTH NUMBER	ITEM NO. [2]	FROM CUT WIRE OR SHIELD STRIP WIRE OR JACKET CIRCUIT POINT [2]	T I N [2]	TERMINATION SPEC. [1] ITEM NO.	NO.	TO CUT WIRE OR SHIELD STRIP WIRE OR JACKET CIRCUIT POINT [2]	T I N [2]	TERMINATION SPEC [1] ITEM NO.	NO.
A 1	3		230	200 10 11	5		230	200 A 14	7A
				A 9					
A 1A	19	SHLD A1	22N			E1	37N		
A 1L		P1-F*	22N			P2-F*	22N		
A 1R		P1-E*	22N			P2-E*	22N		
A 2	3		230	200 10 11	5		230	200 A 14	7A
				A 9					
A 2A	19	SHLD A2	22N			E1			
A 2L		P1-H*	22N			P2-H*			
A 2R		P1-G*	22N			P2-G*			
A 3	3		230	200 10 11	5		230	200 A 14	7A
				A 9					
A 3A	19	SHLD A3	22N			E1	37N		
A 3L		P1-J*	22N			P2-J*	22N		
A 3R		P1-I*	22N			P2-I*	22N		
A 4	3		230	200 10 11	5		230	200 A 14	7A
				A 9					
A 4A	19	SHLD A4	22N			E1	37N		

[1] THE STD CONDUCTOR TERMINATION FIGURES ARE PER
[2] DIMENSIONS ARE IN INCHES AND TWO PLACE DECIMALS.

MANNED SPACECRAFT CENTER HOUSTON, TEXAS	SIZE A	1900978
SCALE-NONE	REV LTR +	SHEET 7 OF 14

MIL 2085 - 4-63 WIR

LIST OF MATERIAL

SEE NOTE	ITEM	REQ'D	PART NUMBER	DESCRIPTION
16	1	1	MS3126F-24-61PW	(1897047-611) CONNECTOR-PLUG
16	2	1	MS3126F-24-61SW	(1897048-611_ CONNECTOR-PLUG
	3	1	1900978-001	WIRE ND 1002181 TYPE 2, CLASS 4, WHT JACKET, 20 AWG WHT/BLU, WHT/RED 252 FT TOTAL LENGTH
	4	1	1900978-002	WIRE ND 1002181 TYPE 1, CLASS 4 WHT JACKET, 20 AWG WHT 126 FT TOTAL LENGTH
	5	1	1900978-003	WIRE ND 1002181 TYPE 3, CLASS 4, WHT JACKET, 20 AWG WHT/BLU, WHT/RED, WHT/YEL 54 FT, TOTAL LENGTH.
	6	1	1900978-004	WIRE ND 1002181 TYPE 1, CLASS 1, 20 AWG WHT TOTAL LENGTH 36 FT
10	7	3	1000243-015	FERRULE, ELEC COND
10	8	3	1000242-016	FERRULE, ELEC COND
10	9	17	1010490-194	INSULATION, SLEEVING ELEC
10	10	14	1000243-014	FERRULE, ELEC COND
10	11	14	1000242-012	FERRULE, ELEC COND
10	12	7	1000243-004	FERRULE, ELEC COND
10	13	7	1000242-004	FERRULE, ELEC COND
10	14	25	1010490-196	INSULATION, SLEEVING ELEC
10	15	5	1016006-002	SPLICE REDUCER
10	16	5	1010490-258	INSULATION SLEEVING
10	17	2	1016128-041	BAND IDENTIFICATION
10	18	1	1016128-011	BAND IDENTIFICATION

MANNED SPACECRAFT CENTER HOUSTON, TEXAS	SIZE A	1900978
SCALE-NONE	REV LTR +	SHEET 5 OF 14

MIL 2084 4-63

GIF CABLE W51 + 1900978

CONDUCTOR INDIVIDUAL LENGTH NUMBER	ITEM NO. [2]	FROM CUT WIRE OR SHIELD STRIP WIRE OR JACKET CIRCUIT POINT [2]	T I N [2]	TERMINATION SPEC. [1] ITEM NO.	NO.	TO CUT WIRE OR SHIELD STRIP WIRE OR JACKET CIRCUIT POINT [2]	T I N [2]	TERMINATION SPEC [1] ITEM NO.	NO.
A 4L		P1-M*	22N			P2-M*	37N		
A 4R		P1-K*	22N			P2-K*	37N		
A 5	3		280	250 10 11	5		280	250 A 14	7A
				A 9					
A 5A	19	SHLD A5	22N			E1	37N		
A 5L		P1-P*	22N			P2-M*	22N		
A 5R		P1-N*	22N			P2-N*	22N		
A 6	4		280	250 12 13	5		280	250 A 20	7A
				A 14					
A 6A	19	SHLD A6	22N			E1	37N		
A 6W		P1-Q*	22N			P2-Q*	22N		
A 7	3		280	250 10 11	5		280	250 A 14	7A
				A 9					
A 7A	19	SHLD A7	22N			E2	37N		
A 7L		P1-S*	22N			P2-S*	22N		
A 7R		P1-R*	22N			P2-R*	22N		
A 8	3		280	250 10 11	5		280	250 A 14	7A
				A 9					

[1] THE STD CONDUCTOR TERMINATION FIGURES ARE PER
[2] DIMENSIONS ARE IN INCHES AND TWO PLACE DECIMALS.

MANNED SPACECRAFT CENTER HOUSTON, TEXAS	SIZE A	1900978
SCALE-NONE	REV LTR +	SHEET 8 OF 14

MIL 2085 - 4-63 WIR

INCHES 0 1 2
PHOTOGRAPHIC SCALE ONLY

GIF CABLE W51 + 1900978

CONDUCTOR NUMBER	CONDUCTOR INDIVIDUAL LENGTH ITEM NO.	FROM CUT WIRE OR SHIELD STRIP WIRE OR JACKET CIRCUIT POINT	FROM TIN	FROM TERMINATION SPEC. ITEM NO.	TO CUT WIRE OR SHIELD STRIP WIRE OR JACKET CIRCUIT POINT	TO TIN	TO TERMINATION SPEC. ITEM NO.
A 11R		P1-AA	22N		P2-AA	37N	
A 12	4		380 350	12 13 5 / A 14		380 350	A 20 7A
A 12A	19	SHLD A12	22N		E3	37N	
A 12W		P1-CC	22N		P2-CC	22N	
A 13	5		380 350	7 8 5 / A 9		380 350	A 14 7A
A 13A	19	SHLD A13	22N		E3	37N	
A 13L		P1-EE	22N		P2-EE	22N	
A 13R		P1-DD	22N		P2-DD	22N	
A 13Y		P1-FF	22N		P2-FF	22N	
A 14	3		430 400	10 11 5 / A 9		430 400	A 14 7A
A 14A	19	SHLD A14	22		E4	37N	
A 14L		P1-HH	22N		P2-HH	22N	
A 14R		P1-GG	22N		P2-GG	22N	
A 15	4		430 400	12 13 5 / A 14		430 400	A 20 7A

1 THE STD CONDUCTOR TERMINATION FIGURES ARE PER
2 DIMENSIONS ARE IN INCHES AND TWO PLACE DECIMALS.

MANNED SPACECRAFT CENTER HOUSTON, TEXAS | SIZE A | 1900978
SCALE - NONE | REV LTR + | SHEET 10 OF 14

MIL 2085 - 4-63 WIR

GIF CABLE W51 + 1900978

CONDUCTOR NUMBER	CONDUCTOR INDIVIDUAL LENGTH ITEM NO.	FROM CUT WIRE OR SHIELD STRIP WIRE OR JACKET CIRCUIT POINT	FROM TIN	FROM TERMINATION SPEC. ITEM NO.	TO CUT WIRE OR SHIELD STRIP WIRE OR JACKET CIRCUIT POINT	TO TIN	TO TERMINATION SPEC. ITEM NO.
A 15A	19	SHLD A15	22N		E4	37N	
A 15W		P1-A	22N		P2-A	22N	
A 16	4		430 400	12 13 5 / A 14		430 400	A 20 7A
A 16A	19	SHLD A16	22N		E4	37N	
A 16W		P1-C	22N		P2-C	22N	
A 17	4		480 450	12 13 5 / A 14		480 450	A 20 7A
A 17A	19	SHLD A17	22N		E4	37N	
A 17W		P1-D	22N		P2-D	22N	
A 18	4		480 450	12 13 5 / A 14		480 450	A 20 7A
A 18A	19	SHLD A18	22N		E4	37N	
A 18W		P1-E	22N		P2-E	22N	
A 19	4		480 450	12 13 5 / A 14		480 450	A 20 7A
A 19A	19	SHLD A19	22N		E4	37N	
A 19W		P1-F	22N		P2-F	22N	

1 THE STD CONDUCTOR TERMINATION FIGURES ARE PER
2 DIMENSIONS ARE IN INCHES AND TWO PLACE DECIMALS.

MANNED SPACECRAFT CENTER HOUSTON, TEXAS | SIZE A | 1900978
SCALE - NONE | REV LTR + | SHEET 11 OF 14

MIL 2085 - 4-63 WIR

GIF CABLE W51 + 1900978

CONDUCTOR NUMBER	CONDUCTOR INDIVIDUAL LENGTH ITEM NO.	FROM CUT WIRE OR SHIELD STRIP WIRE OR JACKET CIRCUIT POINT	FROM TIN	FROM TERMINATION SPEC. ITEM NO.	TO CUT WIRE OR SHIELD STRIP WIRE OR JACKET CIRCUIT POINT	TO TIN	TO TERMINATION SPEC. ITEM NO.
A 8A	19	SHLD A8	22N		E2	37N	
A 8L		P1-U*	22N		P2-U*	22N	
A 8R		P1-T*	22N		P2-T*	22N	
A 9	5		330 300	7 8 5 / A 9		330 300	A 14 7A
A 9A	19	SHLD A9	22N		E2	37N	
A 9L		P1-W*	22N		P2-W*	22N	
A 9R		P1-V*	22N		P2-V*	22N	
A 9Y		P1-X*	22N		P2-X*	22N	
A 10	3		330 300	10 11 5 / A 9		330 300	A 14 7A
A 10A	19	SHLD A10	22N		E3	37N	
A 10L		P1-Z*	22N		P2-Z*	22N	
A 10R		P1-Y*	22N		P2-Y*	22N	
A 11	3		380 350	10 11 / A 9		380 350	A 11 7A
A 11A	19	SHLD A11	22N		E3	37N	
A 11L		P1-BB	22N		P2-BB	37N	

1 THE STD CONDUCTOR TERMINATION FIGURES ARE PER
2 DIMENSIONS ARE IN INCHES AND TWO PLACE DECIMALS.

MANNED SPACECRAFT CENTER HOUSTON, TEXAS | SIZE A | 1900978
SCALE - NONE | REV LTR + | SHEET 9 OF 14

MIL 2085 - 4-63 WIR

GIF CABLE W51 + 1900978

CONDUCTOR NUMBER	CONDUCTOR INDIVIDUAL LENGTH ITEM NO.	FROM CUT WIRE OR SHIELD STRIP WIRE OR JACKET CIRCUIT POINT	FROM TIN	FROM TERMINATION SPEC. ITEM NO.	TO CUT WIRE OR SHIELD STRIP WIRE OR JACKET CIRCUIT POINT	TO TIN	TO TERMINATION SPEC. ITEM NO.
A 20	3		480 450	10 11 5 / A 9		480 450	A 14 7A
A 20A	19	SHLD A20	22N		E5	37N	
A 20L		P1-H	22N		P2-H	22N	
A 20R		P1-G	22N		P2-G	22N	
A 21	3		530 500	10 11 5 / A 9		530 500	A 14 7A
A 21A	19	SHLD A21	22N		E5	37N	
A 21L		P1-K	22N		P2-K	22N	
A 21R		P1-J	22N		P2-J	22N	
A 22	3		530 500	10 11 5 / A 9		530 500	A 14 7A
A 22A	19	SHLD A22	22N		E5	37N	
A 22L		P1-M	22N		P2-M	22N	
A 22R		P1-L	22N		P2-L	22N	
A 23	3		530 500	10 11 5 / A 9		530 500	A 14 7A
A 23A	19	SHLD A23	22N		E5	37N	

1 THE STD CONDUCTOR TERMINATION FIGURES ARE PER
2 DIMENSIONS ARE IN INCHES AND TWO PLACE DECIMALS.

MANNED SPACECRAFT CENTER HOUSTON, TEXAS | SIZE A | 1900978
SCALE - NONE | REV LTR + | SHEET 12 OF 14

MIL 2085 - 4-63 WIR

INCHES 0 1 2
PHOTOGRAPHIC SCALE ONLY

GIF CABLE W51 + 1900978

CONDUCTOR INDIVIDUAL LENGTH NUMBER	ITEM NO.	[2]	FROM CUT WIRE OR SHIELD STRIP WIRE OR JACKET CIRCUIT POINT	[2]	T I N	[2]	TERMINATION SPEC. ITEM NO.	[1]	NO.	TO CUT WIRE OR SHIELD STRIP WIRE OR JACKET CIRCUIT POINT	[2]	T I N	[2]	TERMINATION SPEC ITEM NO.	[1]	NO.
A 23L			P1-P	22	N					P2-P	22	N				
A 23R			P1-N	22	N					P2-N	22	N				
A 24	6		P1-R	22	N					P2-R	22	N				
A 25	6		P1-S	22	N					P2-S	22	N				
A 26	5			530		500	7 8	5			530		500	A 14	7A	
							A 9									
A 26A	19		SHLD A26	22	N					E5	37	N				
A 26L			P1-U	22	N					P2-U	22	N				
A 26R			P1-T	22	N					P2-T	22	N				
A 26Y			P1-V	22	N					P2-V	22	N				
A 27	19		P1-B	22	N					E1	22	N				
A 28	19		E1	22	N					E2	22	N				
A 29	19		E2	22	N					E3	22	N				
A 30	19		E3	22	N					E4	22	N				
A 31	19		E4	22	N					E5	22	N				

[1] THE STD CONDUCTOR TERMINATION FIGURES ARE PER
[2] DIMENSIONS ARE IN INCHES AND TWO PLACE DECIMALS.

MANNED SPACECRAFT CENTER HOUSTON, TEXAS | SIZE A | 1900978
SCALE-NONE | REV LTR + | SHEET 13 OF 14

MIL 2085 - 4-63 WIR

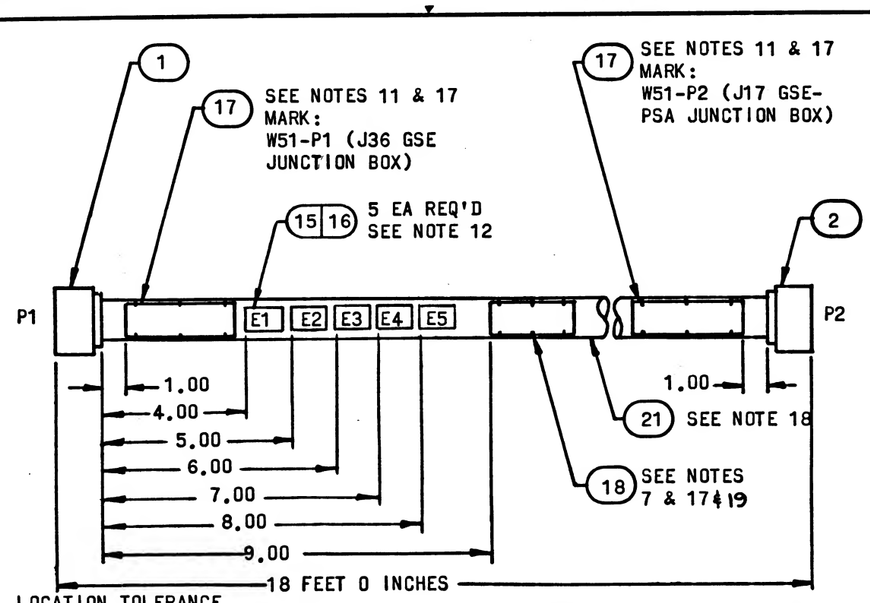

LOCATION TOLERANCE (EXCEPT LENGTH):
+.50
-.50

MANNED SPACECRAFT CENTER HOUSTON, TEXAS | SIZE A | 1900978
SCALE-NONE | REV LTR + | SHEET 14 OF 14

MIL 2084 4-63

PHOTOGRAPHIC SCALE ONLY
INCHES 0 1 2

PENNANT NOTE	GENERAL NOTES
1	SEE CONDUCTOR CHART, PENNANT NOTE 1.
2	SEE CONDUCTOR CHART, PENNANT NOTE 2.
3	INTERPRET DRAWING IN ACCORDANCE WITH STANDARDS PRESCRIBED BY MIL-D-70327.
4	MARK CONDUCTOR IDENTIFICATION ON SINGLE CONDUCTORS PER ND1002019 OMITTING ALL SUFFIX LETTERS EXCEPT A AND B.
5	SPACING OF CONDUCTOR IDENTIFICATION SHALL BE EVERY 15 INCHES MAX. AND AT EACH TERMINATION.
6	SPIRALLING OF THE MARKING IS ALLOWED.
7	IDENTIFY USING DRAWING NO. AND REVISION LETTER PER MIL-STD-130 (ES-267). .12 INCH HIGH CHARACTERS WHITE.
8	Y OR N IN TINNED COLUMN INDICATES YES OR NO.
9	A LETTER WITH AN ASTERISK SUFFIX INDICATES A LOWER CASE LETTER.
10	VENDOR ITEM - SEE SPECIFICATION CONTROL DRAWING.
11	MARK IDENTIFICATION BAND WITH REFERENCE DESIGNATION AS NOTED .12 INCH HIGH COLOR WHITE, HOT IMPRESSION STAMPING PER ND1002019. CENTRALIZE.
12	MARK SLEEVING WITH REFERENCE DESIGNATION AS SHOWN .12 INCH HIGH, COLOR BLACK PER ND1002019.
13	MARK SLEEVING OF MULTI-CONDUCTORS WITH THE CONDUCTOR NUMBER .12 INCH HIGH, COLOR BLACK, PER ND1002019 WHEN SLEEVING ITEM NUMBERS FOLLOW AN A OR T IN THE ACCESSORIES ITEM NUMBER FIELD.

MANNED SPACECRAFT CENTER HOUSTON, TEXAS	SIZE A	1900979
SCALE - NONE	REV LTR C	SHEET 2 OF 13

PENNANT NOTE	GENERAL NOTES
22	TOLERANCE CHART, UNLESS OTHERWISE SPECIFIED ---

APPLICABLE LENGTH FOR WIRE OR CABLE, STRIP WIRE, STRIP JACKET, CUT WIRE OR CUT SHIELD.	TOLERANCE: WIRE OR CABLE	STRIP WIRE	STRIP JACKET	CUT WIRE	CUT SHIELD
UNDER 1 INCH.	+ .06-.00	+.03-.00	+.06-.06	+.06-.06	+.06-.06
1 INCH TO 6 INCHES	+ .50-.00	+.06-.00	+.25-.25	+.25-.25	+.25-.25
6 INCHES TO 6 FEET	+1.00-.00		+.50-.50	+.50-.50	+.50-.50
OVER 6 FEET	+2.00-.00				

MANNED SPACECRAFT CENTER HOUSTON, TEXAS	SIZE A	1900979
SCALE - NONE	REV LTR A	SHEET 4 OF 13

FOR INFORMATION ONLY

CLASS B RELEASE TDR No. 05663 DATE 2/7/69

REVISIONS			
SYM	DESCRIPTION	DATE	APPROVAL
A	CHANGE IN ACCORDANCE WITH CM-195624	3 FEB 64	
B	CHANGE IN ACCORDANCE WITH CM 195642	11 MAR 64	
C	CHANGE IN ACCORDANCE WITH CM 195784 ADDED CUSTOMER DATA (V2-249)	7 APR 64	
D	CHANGE IN ACCORDANCE WITH CM196903 REVISED PER TDRR 05663	13 MAY 64	

APPLICATION	
NEXT ASSY	USED ON
1901308	1900005-011

REV SHEET											
REV STATUS	REV	D	C	A	C	C	C	C	D	E	C
OF SHEETS	SHEET	1	2	3	4	5	6	7	8	9	10

AC SPARK PLUG DIVISION, GMC
MILWAUKEE, WISCONSIN

ACSP PN

DRAWN
CHECKED
APPROVAL
APPROVAL

MANNED SPACECRAFT CENTER HOUSTON, TEXAS

CABLE INTERCONNECT W52
18S, DSS, TESTING

CODE IDENT NO.	SIZE		REV
	A	1900979	D

NASA APPROVAL
MIT APPROVAL
CONTRACT NAS 9-497 SCALE - SHEET 1 OF 13

PENNANT NOTE	GENERAL NOTES
14	A OR T PREFIX IN THE ACCESSORIES ITEM NUMBER COLUMN INDICATES THE READING POSITION AWAY FROM TERMINATION OR TOWARD TERMINATION RESPECTIVELY, OF THE WIRE MARKER SLEEVE.
15	THE SUFFIX LETTER OF A CONDUCTOR IDENTIFICATION NUMBER INDICATES CONDUCTOR SHIELDING, COLOR, OR MARKING. A - FROM END SHIELD L - WHITE WITH BLUE TRACER R - WHITE WITH RED TRACER Y - WHITE WITH YELLOW TRACER W - WHITE
16	ASSEMBLE CONTACTS IN ALL CONNECTOR GROMMET HOLES.
17	SECURE TO CABLE USING ITEM 22. MARKING TO READ AWAY FROM CONNECTOR.
18	SEAL ZIPPER TUBING PER ND1002153.
19	SERIALIZE PER ND1002023.
20	ITEM 24 FURNISHED WITH ITEM 5.
21	ITEM 25 SHALL BE SHORTENED WHEN NECESSARY TO AVOID INTERFERENCE WITH FERRULES AND MAY BE CUT LENGTHWISE ON ONE SIDE. SELECT ONE OR MORE OF ITEM 25 AS REQUIRED TO FIT.
22	SEE NOTES 10 AND 16.

MANNED SPACECRAFT CENTER HOUSTON, TEXAS	SIZE A	1900979
SCALE - NONE	REV LTR C	SHEET 3 OF 13

LIST OF MATERIALS

PENNANT NOTE	ITEM	QTY	PART NO	DESCRIPTION
	1	2	1900979-001	WIRE ND1002181 TYPE 2, CLASS 4, WHT, JAKT, 22AWG, WHT/BLU, WHT/RED, 208 FT. TOTAL LENGTH
	2	1	1900979-002	WIRE ND1002181 TYPE 1, CLASS 4, WHT, JAKT, 22AWG, WHT., 32 FT. TOTAL LENGTH
	3	1	1900979-003	WIRE ND1002181 TYPE 3, CLASS 4, WHT, JAKT, 22AWG, WHT/BLU, WHT/RED, WHT/YEL, 48 FT. TOTAL LENGTH
	4	1	1900979-004	WIRE ND1002181 TYPE 1, CLASS 1, 22AWG WHT., 36 FT. TOTAL LENGTH
16	5	1	MS3126F-24-61PY (1897047-613)	CONNECTOR PLUG
22	6	1	1010411-002	CONNECTOR PLUG
10	7	13	1000243-008	FERRULE ELECT. COND.
10	8	13	1000242-007	FERRULE ELECT. COND.
10	9	3	1000243-011	FERRULE ELECT. COND.
10	10	3	1000242-011	FERRULE ELECT. COND.
10	11	2	1000243-005	FERRULE ELECT. COND.
10	12	2	1000242-002	FERRULE ELECT. COND.
10	13	16	1010490-194	INSULATION SLEEVING ELECT.
10	14	16	1010490-196	INSULATION SLEEVING ELECT.
10	15	3	1010490-258	INSULATION SLEEVING ELECT.
10	16	2	1010490-198	INSULATION SLEEVING ELECT.

MANNED SPACECRAFT CENTER HOUSTON, TEXAS | SIZE A | 1900979
SCALE-NONE | REV LTR C | SHEET 5 OF 13

LIST OF MATERIALS

PENNANT NOTE	ITEM	QTY	PART NO	DESCRIPTION
10	17	2	1010490-200	INSULATION SLEEVING ELECT.
10	18	3	1016006-002	SPLICE REDUCER
10	19	1	1016128-011	BAND IDENTIFICATION
10	20	2	1016128-041	BAND IDENTIFICATION
	21	1	1900979-005	ZIPPER TUBING, ND1002159, TYPE 1, PLASTIC, FLEXIBLE, 1 IN. DIA. 16 FT. TOTAL LENGTH
	22	AR	MIL-T-713	LACING TAPE, TYPE P, CLASS 2, BLACK (ES-2732 NO. 18)
10	23	108	1010484-002	CONTACT SOCKET
20	24			CONTACT PINS
21	25	AR		1897147-104, 106, 108, 112, 116, CABLE CLAMP SLEEVE
10	26	1	1016282-024	RUBBER GROMMET

MANNED SPACECRAFT CENTER HOUSTON, TEXAS | SIZE A | 1900979
SCALE-NONE | REV LTR C | SHEET 6 OF 13

CONDUCTOR NUMBER	INDIVIDUAL LENGTH ITEM NO.	FROM CIRCUIT POINT	CUT WIRE OR SHIELD / STRIP WIRE OR JACKET	TERMINATION SPEC.	ITEM NO.	TO CIRCUIT POINT	CUT WIRE OR SHIELD / STRIP WIRE OR JACKET	TERMINATION SPEC.	ITEM NO.
A 1	1		23Q 20Q	7 6 5 A 13			23Q 20Q	A 14 7A	
A 1A	4	SHLD A1	25N			E1	25N		
A 1L		P1-Z	19N	24		P2- 14	10N	23	
A 1R		P1-Y	19N	24		P2- 1	10N	23	
A 2	1		23Q 20Q	7 6 5 A 13			23Q 20Q	A 14 7A	
A 2A	4	SHLD A2	25N			E1	25N		
A 2L		P1-C*	19N	24		P2- 57	10N	23	
A 2R		P1-B*	19N	24		P2- 67	10N	23	
A 3	1		23Q 20Q	7 6 5 A 13			23Q 20Q	A 14 7A	
A 3A	4	SHLD A3	25N			E1	25N		
A 3L		P1-E*	19N	24		P2- 56	10N	23	
A 3R		P1-D*	19N	24		P2- 66	10N	23	
A 4	2		23Q 20Q	11 12 5 A 16			23Q 20Q	A 13 7A	
A 4A	4	SHLD A4	25N			E1	25N		

1 > THE STD CONDUCTOR TERMINATION FIGURES ARE PER
2 > DIMENSIONS ARE IN INCHES AND TWO PLACE DECIMALS.

MANNED SPACECRAFT CENTER HOUSTON, TEXAS | SIZE A | 1900979
SCALE-NONE | REV LTR C | SHEET 7 OF 13

CONDUCTOR NUMBER	INDIVIDUAL LENGTH ITEM NO.	FROM CIRCUIT POINT	CUT WIRE OR SHIELD / STRIP WIRE OR JACKET	TERMINATION SPEC.	ITEM NO.	TO CIRCUIT POINT	CUT WIRE OR SHIELD / STRIP WIRE OR JACKET	TERMINATION SPEC.	ITEM NO.
A 4N		P1-F*	19N	24		P2- 34	10N	23	
A 5	1		20Q 25Q	7 6 5 A 13			20Q 25Q	A 14 7A	
A 5A	4	SHLD A5	25N			E1	25N		
A 5L		P1-H*	19N	24		P2- 45	10N	23	
A 5R		P1-G*	19N	24		P2- 35	10N	23	
A 6	1		20Q 25Q	7 6 5 A 13			20Q 25Q	A 14 7A	
A 6A	4	SHLD A6	25N			E1	25N		
A 6L		P1-J*	19N	24		P2- 20	10N	23	
A 6R		P1-I*	19N	24		P2- 6	10N	23	
A 7	1		20Q 25Q	7 6 5 A 13			20Q 25Q	A 14 7A	
A 7A	4	SHLD A7	25N			E2	25N		
A 7L		P1-M*	19N	24		P2- 21	10N	23	
A 7R		P1-K*	19N	24		P2- 7	10N	23	
A 8	1		20Q 25Q	7 6 5 A 13			20Q 25Q	A 14 7A	

1 > THE STD CONDUCTOR TERMINATION FIGURES ARE PER
2 > DIMENSIONS ARE IN INCHES AND TWO PLACE DECIMALS.

MANNED SPACECRAFT CENTER HOUSTON, TEXAS | SIZE A | 1900979
SCALE-NONE | REV LTR C | SHEET 8 OF 13

GIK CABLE W52 C 1900979

CONDUCTOR INDIVIDUAL LENGTH NUMBER	ITEM NO. (2)	FROM CUT WIRE OR SHIELD STRIP WIRE OR JACKET (1)	CIRCUIT POINT (2)	TERMINATION SPEC (1)	ITEM NO.	TO CUT WIRE OR SHIELD STRIP WIRE OR JACKET (1)	CIRCUIT POINT (2)	TERMINATION SPEC (1)	ITEM NO.
A 8A	4	SHLD A8	25N			E2	25N		
A 8L		P1-P*	19N	24		P2- 90	10N	23	
A 8R		P1-N*	19N	24		P2-104	10N	23	
A 9	2		33Q 30Q	7 8	5		33Q 30Q	A 14	7A
				A 13					
A 9A	4	SHLD A9	25N			E2	25N		
A 9W		P1-Q*	19N	24		P2- 89	10N	23	
A 10	1		33Q 30Q	7 8	5		33Q 30Q	A 14	7A
				A 13					
A 10A	4	SHLD A10	25N			E2	25N		
A 10L		P1-S*	19N	24		P2- 86	10N	23	
A 10R		P1-R*	19N	24		P2-100	10N	23	
A 11	1		33Q 30Q	7 8	5		33Q 30Q	A 14	7A
				A 13					
A 11A	4	SHLD A11	25N			E2	25N		
A 11L		P1-U*	19N	24		P2- 87	10N	23	
A 11R		P1-T*	19N	24		P2-101	10N	23	
A 12	3		33Q 30Q	9 10	5		33Q 30Q	A 14	7A

1. THE STD CONDUCTOR TERMINATION FIGURES ARE PER
2. DIMENSIONS ARE IN INCHES AND TWO PLACE DECIMALS.

MANNED SPACECRAFT CENTER HOUSTON, TEXAS | SIZE A | 1900979
SCALE - NONE | REV LTR C | SHEET 9 OF 13

GIK CABLE W52 D 1900979

CONDUCTOR INDIVIDUAL LENGTH NUMBER	ITEM NO. (2)	FROM CUT WIRE OR SHIELD STRIP WIRE OR JACKET (1)	CIRCUIT POINT (2)	TERMINATION SPEC (1)	ITEM NO.	TO CUT WIRE OR SHIELD STRIP WIRE OR JACKET (1)	CIRCUIT POINT (2)	TERMINATION SPEC (1)	ITEM NO.
				A 13					
A 12A	4	SHLD A12	25N			P1-C	19N	24	
A 12L		P1-W*	19N	24		P2-108	10N	23	
A 12R		P1-V*	19N	24		P2-107	10N	23	
A 12Y		P1-X*	19N	24		P2- 94	10N	23	
A 13	1		38Q 35Q	7 8	5		38Q 35Q	A 14	7A
				A 13					
A 13A	4	SHLD A13	25N			E3	25N		
A 13L		P1-Z*	19N	24		P2- 60	10N	23	
A 13R		P1-Y*	19N	24		P2- 50	10N	23	
A 14	1		38Q 35Q	7 8	5		38Q 35Q	A 14	7A
				A 13					
A 14A	4	SHLD A14	25N			E3	25N		
A 14L		P1-CC	19N	24		P2- 2	10N	23	
A 14R		P1-BB	19N	24		P2- 3	10N	23	
A 15	1		38Q 35Q	7 8	5		38Q 35Q	A 14	7A
				A 13					
A 15A	4	SHLD A15	25N			E3	25N		

1. THE STD CONDUCTOR TERMINATION FIGURES ARE PER
2. DIMENSIONS ARE IN INCHES AND TWO PLACE DECIMALS.

MANNED SPACECRAFT CENTER HOUSTON, TEXAS | SIZE A | 1900979
SCALE - NONE | REV LTR D | SHEET 10 OF 13

GIK CABLE W52 C 1900979

CONDUCTOR INDIVIDUAL LENGTH NUMBER	ITEM NO. (2)	FROM CUT WIRE OR SHIELD STRIP WIRE OR JACKET (1)	CIRCUIT POINT (2)	TERMINATION SPEC (1)	ITEM NO.	TO CUT WIRE OR SHIELD STRIP WIRE OR JACKET (1)	CIRCUIT POINT (2)	TERMINATION SPEC (1)	ITEM NO.
A 15L		P1-FF	19N	24		P2- 92	10N	23	
A 15R		P1-EE	19N	24		P2-106	10N	23	
A 16	3		38Q 35Q	9 10	5		38Q 35Q	A 14	7A
				A 13					
A 16A	4	SHLD A16	25N			E3	25N		
A 16L		P1-HH	19N	24		P2- 31	10N	23	
A 16R		P1-GG	19N	24		P2- 32	10N	23	
A 16Y		P1-JJ	19N	24		P2- 43	10N	23	
A 17	1		43Q 40Q	7 8	5		43Q 40Q	A 14	7A
				A 13					
A 17A	4	SHLD A17	25N			E3	25N		
A 17L		P1-LL	19N	24		P2- 29	10N	23	
A 17R		P1-KK	19N	24		P2- 28	10N	23	
A 18	4	P1-A	19N	24		P2- 41	10N	23	
A 19	3		43Q 40Q	9 10	5		43Q 40Q	A 14	7A
				A 13					
A 19A	4	SHLD A19	25N			E3	25N		
A 19L		P1-MM	19N	24		P2- 11	10N	23	

1. THE STD CONDUCTOR TERMINATION FIGURES ARE PER
2. DIMENSIONS ARE IN INCHES AND TWO PLACE DECIMALS.

MANNED SPACECRAFT CENTER HOUSTON, TEXAS | SIZE A | 1900979
SCALE - NONE | REV LTR C | SHEET 11 OF 13

GIK CABLE W52 C 1900979

CONDUCTOR INDIVIDUAL LENGTH NUMBER	ITEM NO. (2)	FROM CUT WIRE OR SHIELD STRIP WIRE OR JACKET (1)	CIRCUIT POINT (2)	TERMINATION SPEC (1)	ITEM NO.	TO CUT WIRE OR SHIELD STRIP WIRE OR JACKET (1)	CIRCUIT POINT (2)	TERMINATION SPEC (1)	ITEM NO.
A 19R		P1-NN	19N	24		P2- 25	10N	23	
A 19Y		P1-PP	19N	24		P2- 12	10N	23	
A 20	4	P1-B	19N	24		E1	25N		
A 21	4	E2	25N			E1	25N		
A 22	4	E3	25N			E2	25N		
A 23		DELETED							

1. THE STD CONDUCTOR TERMINATION FIGURES ARE PER
2. DIMENSIONS ARE IN INCHES AND TWO PLACE DECIMALS.

MANNED SPACECRAFT CENTER HOUSTON, TEXAS | SIZE A | 1900979
SCALE - NONE | REV LTR C | SHEET 12 OF 13

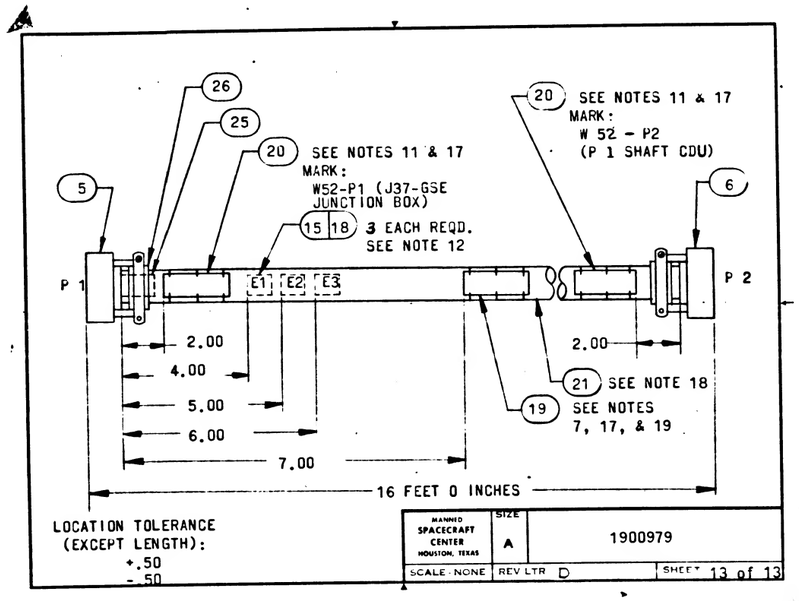

LOCATION TOLERANCE
(EXCEPT LENGTH):
+.50
-.50

MANNED SPACECRAFT CENTER HOUSTON, TEXAS	SIZE A	1900979
SCALE: NONE	REV LTR D	SHEET 13 of 13

PENNANT NOTE	GENERAL NOTES
1	SEE CONDUCTOR CHART, PENNANT NOTE 1.
2	SEE CONDUCTOR CHART, PENNANT NOTE 2.
3	INTERPRET DRAWING IN ACCORDANCE WITH STANDARDS PRESCRIBED BY MIL-D-70327.
4	MARK CONDUCTOR IDENTIFICATION ON SINGLE CONDUCTORS PER ND1002019 OMITTING ALL SUFFIX LETTERS EXCEPT A AND B.
5	SPACING OF CONDUCTOR IDENTIFICATION SHALL BE EVERY 15 INCHES MAX. AND AT EACH TERMINATION.
6	SPIRALLING OF THE MARKING IS ALLOWED.
7	IDENTIFY USING DRAWING NO. AND REVISION LETTER PER MIL-STD-130 (ES-267). .12 INCH HIGH CHARACTERS WHITE.
8	Y OR N IN TINNED COLUMN INDICATES YES OR NO.
9	A LETTER WITH AN ASTERISK SUFFIX INDICATES A LOWER CASE LETTER.
10	VENDOR ITEM - SEE SPECIFICATION CONTROL DRAWING.
11	MARK IDENTIFICATION BAND WITH REFERENCE DESIGNATION AS NOTED .12 INCH HIGH COLOR WHITE, HOT IMPRESSION STAMPING PER ND1002019. CENTRALIZE.
12	MARK SLEEVING WITH REFERENCE DESIGNATION AS SHOWN .12 INCH HIGH, COLOR BLACK PER ND1002019.
13	MARK SLEEVING OF MULTI-CONDUCTORS WITH THE CONDUCTOR NUMBER .12 INCH HIGH, COLOR BLACK, PER ND1002019 WHEN SLEEVING ITEM NUMBERS FOLLOW AN A OR T IN THE ACCESSORIES ITEM NUMBER FIELD.

MANNED SPACECRAFT CENTER HOUSTON, TEXAS	SIZE A	1900979	
SCALE - NONE	REV LTR C		SHEET 2 OF 13

PENNANT NOTE	GENERAL NOTES
14	A OR T PREFIX IN THE ACCESSORIES ITEM NUMBER COLUMN INDICATES THE READING POSITION AWAY FROM TERMINATION OR TOWARD TERMINATION RESPECTIVELY, OF THE WIRE MARKER SLEEVE.
15	THE SUFFIX LETTER OF A CONDUCTOR IDENTIFICATION NUMBER INDICATES CONDUCTOR SHIELDING, COLOR, OR MARKING. A - FROM END SHIELD L - WHITE WITH BLUE TRACER R - WHITE WITH RED TRACER Y - WHITE WITH YELLOW TRACER W - WHITE
16	ASSEMBLE CONTACTS IN ALL CONNECTOR GROMMET HOLES.
17	SECURE TO CABLE USING ITEM 22. MARKING TO READ AWAY FROM CONNECTOR.
18	SEAL ZIPPER TUBING PER ND1002153.
19	SERIALIZE PER ND1002023.
20	ITEM 24 FURNISHED WITH ITEM 5.
21	ITEM 25 SHALL BE SHORTENED WHEN NECESSARY TO AVOID INTERFERENCE WITH FERRULES AND MAY BE CUT LENGTHWISE ON ONE SIDE. SELECT ONE OR MORE OF ITEM 25 AS REQUIRED TO FIT.
22	SEE NOTES 10 AND 16.

MANNED SPACECRAFT CENTER HOUSTON, TEXAS	SIZE A	1900979	
SCALE - NONE	REV LTR C		SHEET 3 OF 13

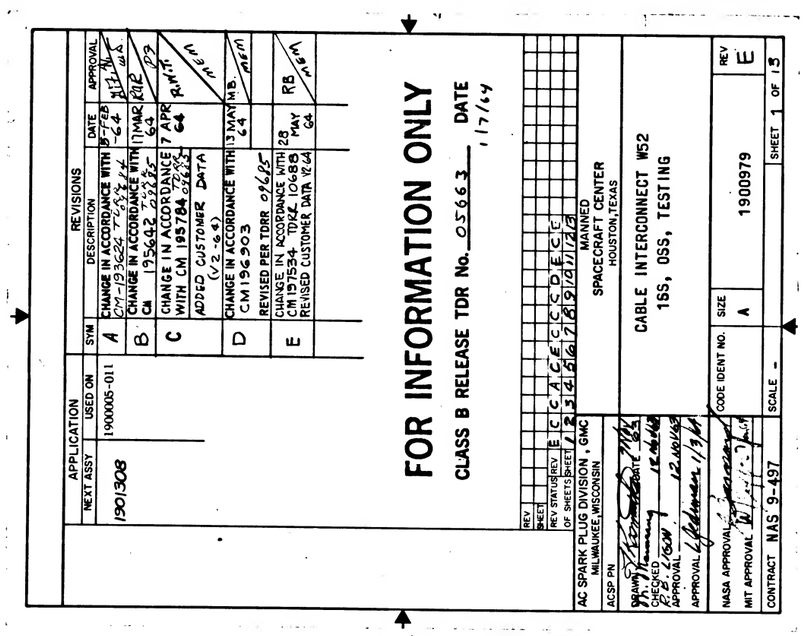

PENNANT NOTE	GENERAL NOTES
22	TOLERANCE CHART, UNLESS OTHERWISE SPECIFIED ---

APPLICABLE LENGTH FOR WIRE OR CABLE, STRIP WIRE, STRIP JACKET, CUT WIRE OR CUT SHIELD.	TOLERANCE: WIRE OR CABLE	STRIP WIRE	STRIP JACKET	CUT WIRE	CUT SHIELD
UNDER 1 INCH	+ .06-.00	+.03-.00	+.06-.06	+.06-.06	+.06-.06
1 INCH TO 6 INCHES	+ .50-.00	+.06-.00	+.25-.25	+.25-.25	+.25-.25
6 INCHES TO 6 FEET	+1.00-.00		+.50-.50	+.50-.50	+.50-.50
OVER 6 FEET	+2.00-.00				

MANNED SPACECRAFT CENTER HOUSTON, TEXAS	SIZE A	1900979	
SCALE - NONE	REV LTR A		SHEET 4 OF 13

LIST OF MATERIALS

PENNANT NOTE	ITEM	QTY	PART NO	DESCRIPTION
	1	1	1900979-001	WIRE ND1002181 TYPE 2, CLASS 4, WHT, JAKT, 22AWG, WHT/BLU, WHT/RED, 208 FT. TOTAL LENGTH
	2	1	1900979-002	WIRE ND1002181 TYPE 1, CLASS 4, WHT, JAKT, 22AWG, WHT., 32 FT. TOTAL LENGTH
	3	1	1900979-003	WIRE ND1002181 TYPE 3, CLASS 4, WHT, JAKT, 22AWG, WHT/BLU, WHT/RED, WHT/YEL, 48 FT. TOTAL LENGTH
	4	1	1900979-004	WIRE ND1002181 TYPE 1, CLASS 1, 22AWG WHT., 36 FT. TOTAL LENGTH
16	5	1	MS3126F-24-61PY (1897047-613)	CONNECTOR PLUG
22	6	1	1010411-002	CONNECTOR PLUG
10	7	13	1000243-008	FERRULE ELECT. COND.
10	8	13	1000242-007	FERRULE ELECT. COND.
10	9	3	1000243-011	FERRULE ELECT. COND.
10	10	3	1000242-011	FERRULE ELECT. COND.
10	11	2	1000243-003	FERRULE ELECT. COND.
10	12	2	1000242-002	FERRULE ELECT. COND.
10	13	16	1010490-194	INSULATION SLEEVING ELECT.
10	14	16	1010490-196	INSULATION SLEEVING ELECT.
10	15	3	1010490-258	INSULATION SLEEVING ELECT.
10	16	2	1010490-198	INSULATION SLEEVING ELECT.

MANNED SPACECRAFT CENTER HOUSTON, TEXAS | SIZE A | 1900979
SCALE-NONE | REV LTR C | SHEET 5 OF 13

LIST OF MATERIALS

PENNANT NOTE	ITEM	QTY	PART NO	DESCRIPTION
10	17	2	1010490-200	INSULATION SLEEVING ELECT.
10	18	3	1016006-002	SPLICE REDUCER
10	19	1	1016128-011	BAND IDENTIFICATION
10	20	2	1016128-041	BAND IDENTIFICATION
	21	1	1900979-005	ZIPPER TUBING, ND1002155, TYPE 1, PLASTIC, FLEXIBLE, 1 IN. DIA. 16 FT. TOTAL LENGTH
	22	AR	MIL-T-713	LACING TAPE, TYPE P, CLASS 2, BLACK (ES-2732 NO. 18)
10	23	108	1010464-002	CONTACT SOCKET
20	24			CONTACT PINS
21	25	AR		1897147-104, 106, 108, 112, 116, CABLE CLAMP SLEEVE
10	26	1	1016282-024	RUBBER GROMMET
10	27	1	1015902- 46	TERMINAL LUG
	28	1	1900979-006	TUBING, MODIFIED POLYVINYL CHLORIDE FLEXIBLE, SHRINK-FIT PER 1016197-006 6 INCH TOTAL LENGTH

MANNED SPACECRAFT CENTER HOUSTON, TEXAS | SIZE A | 1900979
SCALE-NONE | REV LTR E | SHEET 6 OF 13

CONDUCTOR NUMBER	ITEM NO.	2	FROM CUT WIRE OR SHIELD STRIP WIRE OR JACKET CIRCUIT POINT	2	TIN	2	TERMINATION SPEC. 1	ITEM NO.	NO.	TO CUT WIRE OR SHIELD STRIP WIRE OR JACKET CIRCUIT POINT	2	TIN	2	TERMINATION SPEC. 1	ITEM NO.	NO.
A 1	1			23C	20C		7 8		5		23C	20C		A 14		7A
							A 13									
A 1A	4		SHLD A1	25N						E1	25N					
A 1L			P1-Z	19N			24			P2- 14	10N			23		
A 1R			P1-Y	19N			24			P2- 1	10N			23		
A 2	1			23C	20C		7 8		5		23C	20C		A 14		7A
							A 13									
A 2A	4		SHLD A2	25N						E1	25N					
A 2L			P1-C*	19N			24			P2- 57	10N			23		
A 2R			P1-B*	19N			24			P2- 67	10N			23		
A 3	1			23C	20C		7 8		5		23C	20C		A 14		7A
							A 13									
A 3A	4		SHLD A3	25N						E1	25N					
A 3L			P1-E*	19N			24			P2- 56	10N			23		
A 3R			P1-D*	19N			24			P2- 66	10N			23		
A 4	2			23C	20C		11 12		5		23C	20C		A 17		7A
							A 16									
A 4A	4		SHLD A4	25N						E1	25N					

1 THE STD CONDUCTOR TERMINATION FIGURES ARE PER
2 DIMENSIONS ARE IN INCHES AND TWO PLACE DECIMALS.

MIL 2089 - 4-63 WIR

MANNED SPACECRAFT CENTER HOUSTON, TEXAS | SIZE A | 1900979
SCALE-NONE | REV LTR C | SHEET 7 OF 13

CONDUCTOR NUMBER	ITEM NO.	2	FROM CUT WIRE OR SHIELD STRIP WIRE OR JACKET CIRCUIT POINT	2	TIN	2	TERMINATION SPEC. 1	ITEM NO.	NO.	TO CUT WIRE OR SHIELD STRIP WIRE OR JACKET CIRCUIT POINT	2	TIN	2	TERMINATION SPEC 1	ITEM NO.	NO.
A 4W			P1-F*	19N			24			P2- 34	10N			23		
A 5	1			28C	25C		7 8		5		28C	25C		A 14		7A
							A 13									
A 5A	4		SHLD A5	25N						E1	25N					
A 5L			P1-H*	19N			24			P2- 45	10N			23		
A 5R			P1-G*	19N			24			P2- 35	10N			23		
A 6	1			28C	25C		7 8		5		28C	25C		A 14		7A
							A 13									
A 6A	4		SHLD A6	25N						E1	25N					
A 6L			P1-J*	19N			24			P2- 20	10N			23		
A 6R			P1-I*	19N			24			P2- 6	10N			23		
A 7	1			28C	25C		7 8		5		28C	25C		A 14		7A
							A 13									
A 7A	4		SHLD A7	25N						E2	25N					
A 7L			P1-M*	19N			24			P2- 21	10N			23		
A 7R			P1-K*	19N			24			P2- 7	10N			23		
A 8	1			28C	25C		7 8		5		28C	25C		A 14		7A
							A 13									

1 THE STD CONDUCTOR TERMINATION FIGURES ARE PER
2 DIMENSIONS ARE IN INCHES AND TWO PLACE DECIMALS.

MIL 2089 - 4-63 WIR

MANNED SPACECRAFT CENTER HOUSTON, TEXAS | SIZE A | 1900979
SCALE-NONE | REV LTR C | SHEET 8 OF 13

GIK CABLE W52 C 1900979

CONDUCTOR INDIVIDUAL LENGTH NUMBER	ITEM NO. (2)	FROM CUT WIRE OR SHIELD STRIP WIRE OR JACKET	CIRCUIT POINT (2)	T I N (2)	TERMINATION SPEC. (1)	ITEM NO.	NO.	TO CUT WIRE OR SHIELD STRIP WIRE OR JACKET	CIRCUIT POINT (2)	T I N (2)	TERMINATION SPEC. (1)	ITEM NO.	NO.
A 8A	4	SHLD A8		25N				E2		25N			
A 8L		P1-P*		19N		24		P2- 90		10N		23	
A 8R		P1-N*		19N		24		P2-104		10N		23	
A 9	2		330	300	11 12		5		330	300	A 17		7A
					A 16								
A 9A	4	SHLD A9		25N				E2		25N			
A 9W		P1-Q*		19N		24		P2- 89		10N		23	
A 10	1		330	300	7 8		5		330	300	A 14		7A
					A 13								
A 10A	4	SHLD A10		25N				E2		25N			
A 10L		P1-S*		19N		24		P2- .86		10N		23	
A 10R		P1-R*		19N		24		P2-100		10N		23	
A 11	1		330	300	7 8		5		330	300	A 14		7A
					A 13								
A 11A	4	SHLD A11		25N				E2		25N			
A 11L		P1-U*		19N		24		P2- 87		10N		23	
A 11R		P1-T*		19N		24		P2-101		10N		23	
A 12	3		330	300	9 10		5		330	300	A 14		7A

(1) THE STD CONDUCTOR TERMINATION FIGURES ARE PER
(2) DIMENSIONS ARE IN INCHES AND TWO PLACE DECIMALS.

MANNED SPACECRAFT CENTER HOUSTON, TEXAS | SIZE A | 1900979
SCALE-NONE | REV LTR C | SHEET 9 OF 13

MIL 2089 - 4-63 WIR

GIK CABLE W52 D 1900979

CONDUCTOR INDIVIDUAL LENGTH NUMBER	ITEM NO. (2)	FROM CUT WIRE OR SHIELD STRIP WIRE OR JACKET	CIRCUIT POINT (2)	T I N (2)	TERMINATION SPEC. (1)	ITEM NO.	NO.	TO CUT WIRE OR SHIELD STRIP WIRE OR JACKET	CIRCUIT POINT (2)	T I N (2)	TERMINATION SPEC. (1)	ITEM NO.	NO.
						A 13							
A 12A	4	SHLD A12		25N				P1-C		19N		24	
A 12L		P1-W*		19N		24		P2-108		10N		23	
A 12R		P1-V*		19N		24		P2-107		10N		23	
A 12Y		P1-X*		19N		24		P2- 94		10N		23	
A 13	1		380	350	7 8		5		380	350	A 14		7A
					A 13								
A 13A	4	SHLD A13		25N				E3		25N			
A 13L		P1-Z*		19N		24		P2- 60		10N		23	
A 13R		P1-Y*		19N		24		P2- 50		10N		23	
A 14	1		380	350	7 8		5		380	350	A 14		7A
					A 13								
A 14A	4	SHLD A14		25N				E3		25N			
A 14L		P1-CC		19N		24		P2- 2		10N		23	
A 14R		P1-BB		19N		24		P2- 3		10N		23	
A 15	1		380	350	7 8		5		380	350	A 14		7A
					A 13								
A 15A	4	SHLD A15		25N				E3		25N			

(1) THE STD CONDUCTOR TERMINATION FIGURES ARE PER
(2) DIMENSIONS ARE IN INCHES AND TWO PLACE DECIMALS.

MANNED SPACECRAFT CENTER HOUSTON, TEXAS | SIZE A | 1900979
SCALE-NONE | REV LTR D | SHEET 10 OF 13

MIL 2089 - 4-63 WIR

GIK CABLE W52 E 1900979

CONDUCTOR INDIVIDUAL LENGTH NUMBER	ITEM NO. (2)	FROM CUT WIRE OR SHIELD STRIP WIRE OR JACKET	CIRCUIT POINT (2)	T I N (2)	TERMINATION SPEC. (1)	ITEM NO.	NO.	TO CUT WIRE OR SHIELD STRIP WIRE OR JACKET	CIRCUIT POINT (2)	T I N (2)	TERMINATION SPEC. (1)	ITEM NO.	NO.
A 15L		P1-FF		19N		24		P2- 2		10N		23	
A 15R		P1-EE		19N		24		P2-106		10N		23	
A 16	3		380	350	9 10		5		380	350	A 14		7A
					A 13								
A 16A	4	SHLD A16		25N				E3		25N			
A 16L		P1-HH		19N		24		P2- 31		10N		23	
A 16R		P1-GG		19N		24		P2- 32		10N		23	
A 16Y		P1-JJ		19N		24		P2- 43		10N		23	
A 17	1		430	400	7 8		5		430	400	A 14		7A
					A 13								
A 17A	4	SHLD A17		25N				E3		25N			
A 17L		P1-LL		19N		24		P2- 29		10N		23	
A 17R		P1-KK		19N		24		P2- 28		10N		23	
A 18	4	P3- 1		25N		27		P2- 41		10N		23	
A 19	3		430	400	9 10		5		430	400	A 14		7A
					A 13								
A 19A	4	SHLD A19		25N				E3		25N			
A 19L		P1-MM		19N		24		P2- 11		10N		23	

(1) THE STD CONDUCTOR TERMINATION FIGURES ARE PER
(2) DIMENSIONS ARE IN INCHES AND TWO PLACE DECIMALS.

MANNED SPACECRAFT CENTER HOUSTON, TEXAS | SIZE A | 1900979
SCALE-NONE | REV LTR E | SHEET 11 OF 13

MIL 2089 - 4-63 WIR

GIK CABLE W52 C 1900979

CONDUCTOR INDIVIDUAL LENGTH NUMBER	ITEM NO. (2)	FROM CUT WIRE OR SHIELD STRIP WIRE OR JACKET	CIRCUIT POINT (2)	T I N (2)	TERMINATION SPEC. (1)	ITEM NO.	NO.	TO CUT WIRE OR SHIELD STRIP WIRE OR JACKET	CIRCUIT POINT (2)	T I N (2)	TERMINATION SPEC. (1)	ITEM NO.	NO.
A 19R		P1-NN		19N		24		P2- 25		10N		23	
A 19Y		P1-PP		19N		24		P2- 12		10N		23	
A 20	4	P1-B		19N		24		E1		25N			
A 21	4	E2		25N				E1		25N			
A 22	4	E3		25N				E2		25N			
A 23		DELETED											

(1) THE STD CONDUCTOR TERMINATION FIGURES ARE PER
(2) DIMENSIONS ARE IN INCHES AND TWO PLACE DECIMALS.

MANNED SPACECRAFT CENTER HOUSTON, TEXAS | SIZE A | 1900979
SCALE-NONE | REV LTR C | SHEET 12 OF 13

MIL 2089 - 4-63 WIR

1900979

REVISIONS					
SYM	ZONE	DESCRIPTION	CHG NO.	DATE	APPD.
		SEE SHEET 1 FOR REVISION RECORD			

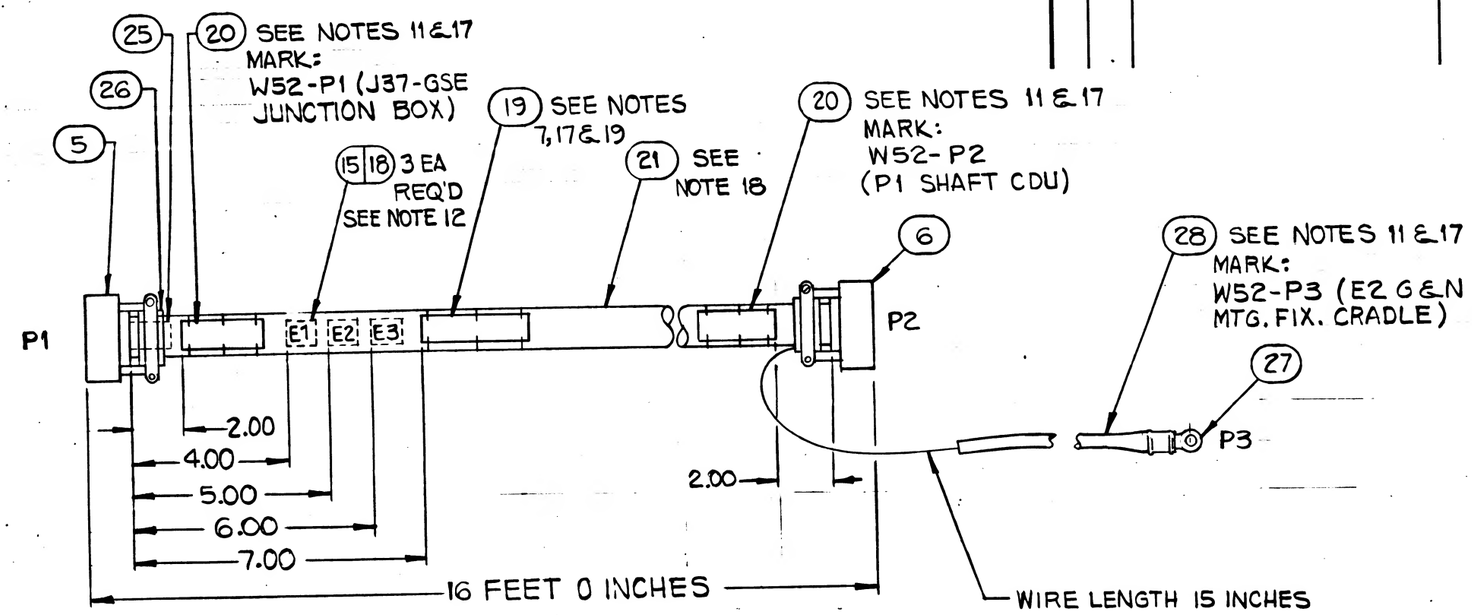

LOCATION TOLERANCE
(EXCEPT LENGTH): ±.50

NEXT ASSY	USED ON
APPLICATION	

UNLESS OTHERWISE SPECIFIED
DIMENSIONS ARE IN INCHES
TOLERANCES ON
FRACTIONS ± — DECIMALS ± — ANGLES ± —
DO NOT SCALE THIS DRAWING
MATERIAL
CONTRACT

AC SPARK PLUG DIVISION, GMC
MILWAUKEE, WISCONSIN
ACSP PN
DRAWN T. KOSMOTKA DATE 7 NOV 63
CHECKED M. MANNING 12 NOV 63
APPROVAL R. B. LIGON 12 NOV 63
APPROVAL
NASA APPROVAL
MIT APPROVAL

MANNED
SPACECRAFT CENTER
HOUSTON, TEXAS

CABLE INTERCONNECT W52
ISS, OSS, TESTING

CODE IDENT NO. | SIZE C | 1900979
SCALE NONE | SHEET 13 OF 13

MIL 1077C-P

APPLICATION		REVISIONS			
NEXT ASSY	USED ON	SYM	DESCRIPTION	DATE	APPROVAL
1901308	1900005-011	A	CHANGE IN ACCORDANCE WITH CM-193624 TDRR 05664	5-FEB -64	
		B	CHANGE IN ACCORDANCE WITH CM 195642 TDRR 05685	17MAR 64	KAR
		C	CHANGE IN ACCORDANCE WITH CM 195784 TDRR 05663	7 APR 64	R.W.T.
		-	ADDED CUSTOMER DATA (V2-64)		MEM
		D	CHANGE IN ACCORDANCE WITH CM 196903	13 MAY 64	MB.
		(H)	REVISED PER TDRR 05685		MEM
		(M) E	CHANGE IN ACCORDANCE WITH CM 197534 TDRR 10688 REVISED CUSTOMER DATA V2 64	28 MAY 64	RB. MEM
		F	CHANGE IN ACCORDANCE WITH CM 199016 12760	30 JUL 64	JWP

FOR INFORMATION ONLY

CLASS B RELEASE TDR No. 05663 **DATE** 1/7/64

REV																							
SHEET																							
REV STATUS OF SHEETS	REV	F	C	C	A	C	E	C	C	C	D	E	C	F									
	SHEET	1	2	3	4	5	6	7	8	9	10	11	12	13									

AC SPARK PLUG DIVISION, GMC
MILWAUKEE, WISCONSIN

ACSP PN

DRAWN DATE
CHECKED 12-16-63
APPROVAL 12 NOV 63
APPROVAL 1/3/64

MANNED
SPACECRAFT CENTER
HOUSTON, TEXAS

CABLE INTERCONNECT W52
1SS, OSS, TESTING

NASA APPROVAL
MIT APPROVAL

CODE IDENT NO.	SIZE		REV
	A	1900979	F

CONTRACT NAS 9-497 SCALE - SHEET 1 OF 13

PENNANT NOTE	GENERAL NOTES
1	SEE CONDUCTOR CHART. PENNANT NOTE 1.
2	SEE CONDUCTOR CHART. PENNANT NOTE 2.
3	INTERPRET DRAWING IN ACCORDANCE WITH STANDARDS PRESCRIBED BY MIL-D-70327.
4	MARK CONDUCTOR IDENTIFICATION ON SINGLE CONDUCTORS PER ND1002019 OMITTING ALL SUFFIX LETTERS EXCEPT A AND B.
5	SPACING OF CONDUCTOR IDENTIFICATION SHALL BE EVERY 15 INCHES MAX. AND AT EACH TERMINATION.
6	SPIRALLING OF THE MARKING IS ALLOWED.
7	IDENTIFY USING DRAWING NO. AND REVISION LETTER PER MIL-STD-130 (ES-267). .12 INCH HIGH CHARACTERS WHITE.
8	Y OR N IN TINNED COLUMN INDICATES YES OR NO.
9	A LETTER WITH AN ASTERISK SUFFIX INDICATES A LOWER CASE LETTER.
10	VENDOR ITEM - SEE SPECIFICATION CONTROL DRAWING.
11	MARK IDENTIFICATION BAND WITH REFERENCE DESIGNATION AS NOTED .12 INCH HIGH COLOR WHITE. HOT IMPRESSION STAMPING PER ND1002019. CENTRALIZE.
12	MARK SLEEVING WITH REFERENCE DESIGNATION AS SHOWN .12 INCH HIGH. COLOR BLACK PER ND1002019.
13	MARK SLEEVING OF MULTI-CONDUCTORS WITH THE CONDUCTOR NUMBER .12 INCH HIGH. COLOR BLACK. PER ND1002019 WHEN SLEEVING ITEM NUMBERS FOLLOW AN A OR T IN THE ACCESSORIES ITEM NUMBER FIELD.

MANNED SPACECRAFT CENTER HOUSTON, TEXAS	SIZE A	1900979	
SCALE - NONE	REV LTR C		SHEET 2 OF 13

PENNANT NOTE	GENERAL NOTES
14	A OR T PREFIX IN THE ACCESSORIES ITEM NUMBER COLUMN INDICATES THE READING POSITION AWAY FROM TERMINATION OR TOWARD TERMINATION RESPECTIVELY. OF THE WIRE MARKER SLEEVE.
15	THE SUFFIX LETTER OF A CONDUCTOR IDENTIFICATION NUMBER INDICATES CONDUCTOR SHIELDING, COLOR, OR MARKING. A - FROM END SHIELD L - WHITE WITH BLUE TRACER R - WHITE WITH RED TRACER Y - WHITE WITH YELLOW TRACER W - WHITE
16	ASSEMBLE CONTACTS IN ALL CONNECTOR GROMMET HOLES.
17	SECURE TO CABLE USING ITEM 22. MARKING TO READ AWAY FROM CONNECTOR.
18	SEAL ZIPPER TUBING PER ND1002153.
19	SERIALIZE PER ND1002023.
20	ITEM 24 FURNISHED WITH ITEM 5.
21	ITEM 25 SHALL BE SHORTENED WHEN NECESSARY TO AVOID INTERFERENCE WITH FERRULES AND MAY BE CUT LENGTHWISE ON ONE SIDE. SELECT ONE OR MORE OF ITEM 25 AS REQUIRED TO FIT.
22	SEE NOTES 10 AND 16.

MANNED SPACECRAFT CENTER HOUSTON, TEXAS	SIZE A	1900979	
SCALE - NONE	REV LTR C		SHEET 3 OF 13

PENNANT NOTE 22 — GENERAL NOTES

TOLERANCE CHART, UNLESS OTHERWISE SPECIFIED ---

APPLICABLE LENGTH FOR WIRE OR CABLE, STRIP WIRE, STRIP JACKET, CUT WIRE OR CUT SHIELD.	TOLERANCE				
	WIRE OR CABLE	STRIP WIRE	STRIP JACKET	CUT WIRE	CUT SHIELD
UNDER 1 INCH	+.06-.00	+.03-.00	+.06-.06	+.06-.06	+.06-.06
1 INCH TO 6 INCHES	+.50-.00	+.06-.00	+.25-.25	+.25-.25	+.25-.25
6 INCHES TO 6 FEET	+1.00-.00		+.50-.50	+.50-.50	+.50-.50
OVER 6 FEET	+2.00-.00				

MANNED SPACECRAFT CENTER HOUSTON, TEXAS	SIZE A	1900979	
SCALE - NONE	REV LTR A		SHEET 4 OF 13

PENNANT NOTE — LIST OF MATERIALS

NOTE	ITEM	QTY	PART NO	DESCRIPTION
	1	1	1900979-001	WIRE ND1002181 TYPE 2, CLASS 4, WHT, JAKT, 22AWG, WHT/BLU, WHT/RED, 208 FT. TOTAL LENGTH
	2	1	1900979-002	WIRE ND1002181 TYPE 1, CLASS 4, WHT, JAKT, 22AWG, WHT., 32 FT. TOTAL LENGTH
	3	1	1900979-003	WIRE ND1002181 TYPE 3, CLASS 4, WHT, JAKT, 22AWG, WHT/BLU, WHT/RED, WHT/YEL, 48 FT. TOTAL LENGTH
	4	1	1900979-004	WIRE ND1002181 TYPE 1, CLASS 1, 22AWG WHT., 36 FT. TOTAL LENGTH
16	5	1	MS3126F-24-61PY (1897047-613)	CONNECTOR PLUG
22	6	1	1010411-002	CONNECTOR PLUG
10	7	13	1000243-008	FERRULE ELECT. COND.
10	8	13	1000242-007	FERRULE ELECT. COND.
10	9	3	1000243-011	FERRULE ELECT. COND.
10	10	3	1000242-011	FERRULE ELECT. COND.
10	11	2	1000243-003	FERRULE ELECT. COND.
10	12	2	1000242-002	FERRULE ELECT. COND.
10	13	16	1010490-194	INSULATION SLEEVING ELECT.
10	14	16	1010490-196	INSULATION SLEEVING ELECT.
10	15	3	1010490-258	INSULATION SLEEVING ELECT.
10	16	2	1010490-198	INSULATION SLEEVING ELECT.

MANNED SPACECRAFT CENTER HOUSTON, TEXAS	SIZE A	1900979	
SCALE - NONE	REV LTR C		SHEET 5 OF 13

LIST OF MATERIALS

PENNANT NOTE	ITEM	QTY	PART NO	DESCRIPTION
10	17	2	1010490-200	INSULATION SLEEVING ELECT.
10	18	3	1016006-002	SPLICE REDUCER
10	19	1	1016128-011	BAND IDENTIFICATION
10	20	2	1016128-041	BAND IDENTIFICATION
	21	1	1900979-005	ZIPPER TUBING, ND1002155, TYPE 1, PLASTIC, FLEXIBLE, 1 IN. DIA. 16 FT. TOTAL LENGTH
	22	AR	MIL-T-713	LACING TAPE, TYPE P, CLASS 2, BLACK (ES-2732 NO. 18)
10	23	108	1010464-002	CONTACT SOCKET
20	24			CONTACT PINS
21	25	AR		1897147-104, 106, 108, 112, 116, CABLE CLAMP SLEEVE
10	26	1	1016282-024	RUBBER GROMMET
10	27	1	1015902-46	TERMINAL LUG
	28	1	1900979-006	TUBING, MODIFIED POLYVINYL CHLORIDE FLEXIBLE, SHRINK-FIT PER 1016197-006 6 INCH TOTAL LENGTH

MANNED SPACECRAFT CENTER HOUSTON, TEXAS | SIZE A | 1900979
SCALE-NONE | REV LTR E | SHEET 6 OF 13

CONDUCTOR INDIVIDUAL LENGTH NUMBER	ITEM NO. 3>	FROM CUT WIRE OR SHIELD STRIP WIRE OR JACKET CIRCUIT POINT 2>	1 2	TERMINATION SPEC 1>	ITEM NO	NO.	TO CUT WIRE OR SHIELD STRIP WIRE OR JACKET CIRCUIT POINT 2>	1 2	TERMINATION SPEC 1>	ITEM NO	NO.
A 1	1		23Q	20Q	7 8	5		23Q	20Q	A 14	7A
					A 13						
A 1A	4	SHLD A1	25N				E1	25N			
A 1L		P1-Z	19N		24		P2- 14	10N		23	
A 1R		P1-Y	19N		24		P2- 1	10N		23	
A 2	1		23Q	20Q	7 8	5		23Q	20Q	A 14	7A
					A 13						
A 2A	4	SHLD A2	25N				E1	25N			
A 2L		P1-C*	19N		24		P2- 57	10N		23	
A 2R		P1-B*	19N		24		P2- 67	10N		23	
A 3	1		23Q	20Q	7 8	5		23Q	20Q	A 14	7A
					A 13						
A 3A	4	SHLD A3	25N				E1	25N			
A 3L		P1-E*	19N		24		P2- 56	10N		23	
A 3R		P1-D*	19N		24		P2- 66	10N		23	
A 4	2		23Q	20Q	11 12	5		23Q	20Q	A 17	7A
					A 16						
A 4A	4	SHLD A4	25N				E1	25N			

1> THE STD CONDUCTOR TERMINATION FIGURES ARE PER
2> DIMENSIONS ARE IN INCHES AND TWO PLACE DECIMALS.

MANNED SPACECRAFT CENTER HOUSTON, TEXAS | SIZE A | 1900979
SCALE-NONE | REV LTR C | SHEET 7 OF 13

CONDUCTOR INDIVIDUAL LENGTH NUMBER	ITEM NO. 3>	FROM CUT WIRE OR SHIELD STRIP WIRE OR JACKET CIRCUIT POINT 2>	1 2	TERMINATION SPEC 1>	ITEM NO	NO.	TO CUT WIRE OR SHIELD STRIP WIRE OR JACKET CIRCUIT POINT 2>	1 2	TERMINATION SPEC 1>	ITEM NO	NO.
A 4W		P1-F*	19N		24		P2- 34	10N		23	
A 5	1		28Q	25Q	7 8	5		28Q	25Q	A 14	7A
					A 13						
A 5A	4	SHLD A5	25N				E1	25N			
A 5L		P1-H*	19N		24		P2- 45	10N		23	
A 5R		P1-G*	19N		24		P2- 35	10N		23	
A 6	1		28Q	25Q	7 8	5		28Q	25Q	A 14	7A
					A 13						
A 6A	4	SHLD A6	25N				E1	25N			
A 6L		P1-J*	19N		24		P2- 20	10N		23	
A 6R		P1-I*	19N		24		P2- 6	10N		23	
A 7	1		28Q	25Q	7 8	5		28Q	25Q	A 14	7A
					A 13						
A 7A	4	SHLD A7	25N				E2	25N			
A 7L		P1-M*	19N		24		P2- 21	10N		23	
A 7R		P1-K*	19N		24		P2- 7	10N		23	
A 8	1		28Q	25Q	7 8	5		28Q	25Q	A 14	7A
					A 13						

1> THE STD CONDUCTOR TERMINATION FIGURES ARE PER
2> DIMENSIONS ARE IN INCHES AND TWO PLACE DECIMALS.

MANNED SPACECRAFT CENTER HOUSTON, TEXAS | SIZE A | 1900979
SCALE-NONE | REV LTR C | SHEET 8 OF 13

CONDUCTOR INDIVIDUAL LENGTH NUMBER	ITEM NO. 3>	FROM CUT WIRE OR SHIELD STRIP WIRE OR JACKET CIRCUIT POINT 2>	1 2	TERMINATION SPEC 1>	ITEM NO	NO.	TO CUT WIRE OR SHIELD STRIP WIRE OR JACKET CIRCUIT POINT 2>	1 2	TERMINATION SPEC 1>	ITEM NO	NO.
A 8A	4	SHLD A8	25N				E2	25N			
A 8L		P1-P*	19N		24		P2- 90	10N		23	
A 8R		P1-N*	19N		24		P2-104	10N		23	
A 9	2		33Q	30Q	11 12	5		33Q	30Q	A 17	7A
					A 16						
A 9A	4	SHLD A9	25N				E2	25N			
A 9W		P1-Q*	19N		24		P2- 89	10N		23	
A 10	1		33Q	30Q	7 8	5		33Q	30Q	A 14	7A
					A 13						
A 10A	4	SHLD A10	25N				E2	25N			
A 10L		P1-S*	19N		24		P2- 86	10N		23	
A 10R		P1-R*	19N		24		P2-100	10N		23	
A 11	1		33Q	30Q	7 8	5		33Q	30Q	A 14	7A
					A 13						
A 11A	4	SHLD A11	25N				E2	25N			
A 11L		P1-U*	19N		24		P2- 87	10N		23	
A 11R		P1-T*	19N		24		P2-101	10N		23	
A 12	3		33Q	30Q	9 10	5		33Q	30Q	A 14	7A

1> THE STD CONDUCTOR TERMINATION FIGURES ARE PER
2> DIMENSIONS ARE IN INCHES AND TWO PLACE DECIMALS.

MANNED SPACECRAFT CENTER HOUSTON, TEXAS | SIZE A | 1900979
SCALE-NONE | REV LTR C | SHEET 9 OF 13

GIK CABLE W52 D 1900979

CONDUCTOR NUMBER	INDIVIDUAL LENGTH ITEM NO. 2	FROM CUT WIRE OR SHIELD / STRIP WIRE OR JACKET / CIRCUIT POINT 2	1	2	TERMINATION SPEC. 1	NO.	TO CUT WIRE OR SHIELD / STRIP WIRE OR JACKET / CIRCUIT POINT 2	1	2	TERMINATION SPEC. 1	NO.
					BRM NO.					ITEM NO.	
					A 13						
A 12A	4	SHLD A12	25N				P1-C	19N		24	
A 12L		P1-W*	19N		24		P2-108	10N		23	
A 12R		P1-V*	19N		24		P2-107	10N		23	
A 12Y		P1-X*	19N		24		P2- 94	10N		23	
A 13	1		380	350	7	8		380	350	A 14	7A
					A 13						
A 13A	4	SHLD A13	25N				E3	25N			
A 13L		P1-Z*	19N		24		P2- 60	10N		23	
A 13R		P1-Y*	19N		24		P2- 50	10N		23	
A 14	1		380	350	7	8		380	350	A 14	7A
					A 13						
A 14A	4	SHLD A14	25N				E3	25N			
A 14L		P1-CC	19N		24		P2- 2	10N		23	
A 14R		P1-BB	19N		24		P2- 3	10N		23	
A 15	1		380	350	7	8		380	350	A 14	7A
					A 13						
A 15A	4	SHLD A15	25N				E3	25N			

1 > THE STD CONDUCTOR TERMINATION FIGURES ARE PER
2 > DIMENSIONS ARE IN INCHES AND TWO PLACE DECIMALS.

MANNED SPACECRAFT CENTER HOUSTON, TEXAS | SIZE A | 1900979
SCALE-NONE | REV LTR D | SHEET 10 OF 13

GIK CABLE W52 E 1900979

CONDUCTOR NUMBER	INDIVIDUAL LENGTH ITEM NO. 2	FROM CUT WIRE OR SHIELD / STRIP WIRE OR JACKET / CIRCUIT POINT 2	1	2	TERMINATION SPEC. 1	NO.	TO CUT WIRE OR SHIELD / STRIP WIRE OR JACKET / CIRCUIT POINT 2	1	2	TERMINATION SPEC. 1	NO.
					ITEM NO.					ITEM NO.	
A 15L		P1-FF	19N		24		P2- 2	10N		23	
A 15R		P1-EE	19N		24		P2-106	10N		23	
A 16	3		380	350	9	10		380	350	A 14	7A
					A 13						
A 16A	4	SHLD A16	25N				E3	25N			
A 16L		P1-HH	19N		24		P2- 31	10N		23	
A 16R		P1-GG	19N		24		P2- 32	10N		23	
A 16Y		P1-JJ	19N		24		P2- 43	10N		23	
A 17	1		430	400	7	8		430	400	A 14	7A
					A 13						
A 17A	4	SHLD A17	25N				E3	25N			
A 17L		P1-LL	19N		24		P2- 29	10N		23	
A 17R		P1-KK	19N		24		P2- 28	10N		23	
A 18	4	P3- 1	25N		27		P2- 41	10N		23	
A 19	3		430	400	9	10		430	400	A 14	7A
					A 13						
A 19A	4	SHLD A19	25N				E3	25N			
A 19L		P1-MM	19N		24		P2- 11	10N		23	

1 > THE STD CONDUCTOR TERMINATION FIGURES ARE PER
2 DIMENSIONS ARE IN INCHES AND TWO PLACE DECIMALS.

MANNED SPACECRAFT CENTER HOUSTON, TEXAS | SIZE A | 1900979
SCALE-NONE | REV LTR E | SHEET 11 OF 13

GIK CABLE W52 C 1900979

CONDUCTOR NUMBER	INDIVIDUAL LENGTH ITEM NO. 2	FROM CUT WIRE OR SHIELD / STRIP WIRE OR JACKET / CIRCUIT POINT 2	1	2	TERMINATION SPEC. 1	NO.	TO CUT WIRE OR SHIELD / STRIP WIRE OR JACKET / CIRCUIT POINT 2	1	2	TERMINATION SPEC. 1	NO.
					ITEM NO.					ITEM NO.	
A 19R		P1-NN	19N		24		P2- 25	10N		23	
A 19Y		P1-PP	19N		24		P2- 12	10N		23	
A 20	4	P1-B	19N		24		E1	25N			
A 21	4	E2	25N				E1	25N			
A 22	4	E3	25N				E2	25N			
A 23		DELETED									

1 > THE STD CONDUCTOR TERMINATION FIGURES ARE PER
2 . DIMENSIONS ARE IN INCHES AND TWO PLACE DECIMALS.

MANNED SPACECRAFT CENTER HOUSTON, TEXAS | SIZE A | 1900979
SCALE-NONE | REV LTR C | SHEET 12 OF 13

1900979

REVISIONS					
SYM	ZONE	DESCRIPTION	CHG NO.	DATE	APPD.
		SEE SHEET 1 FOR REVISION RECORD			

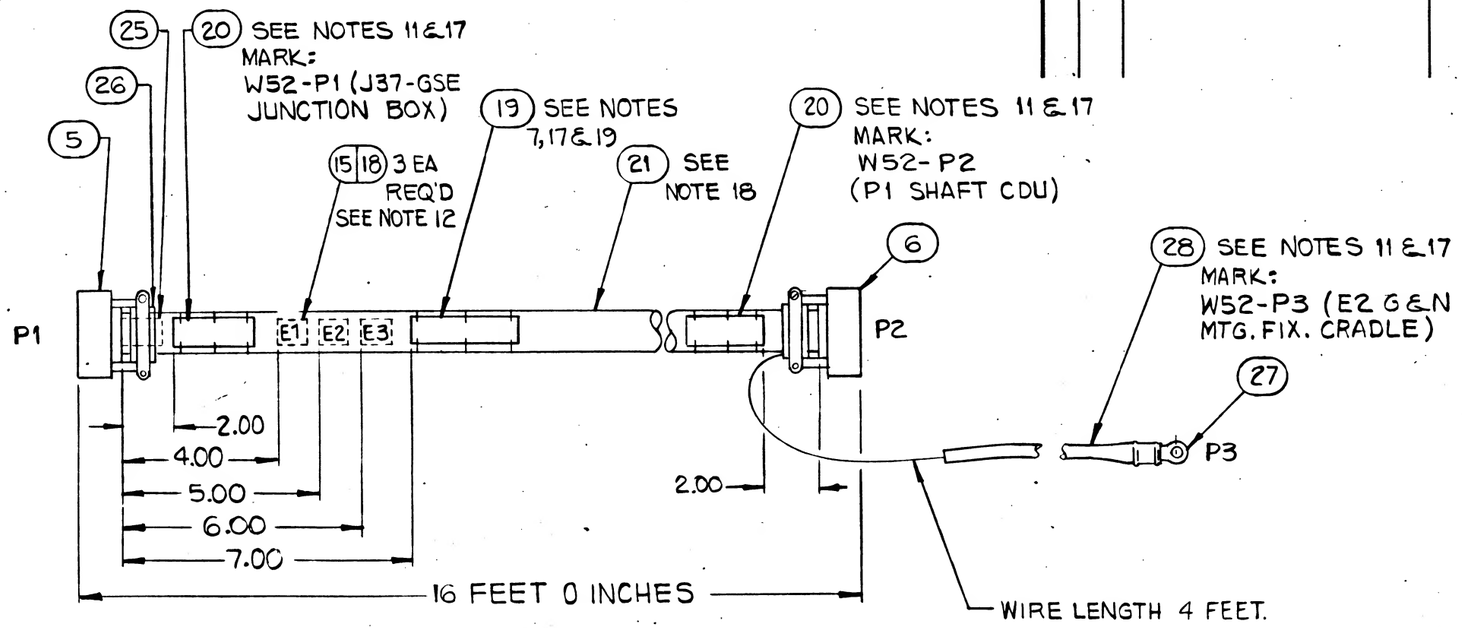

LOCATION TOLERANCE
(EXCEPT LENGTH): ±.50

NEXT ASSY	USED ON	UNLESS OTHERWISE SPECIFIED DIMENSIONS ARE IN INCHES TOLERANCES ON FRACTIONS ± — DECIMALS ± — ANGLES ± —	AC SPARK PLUG DIVISION, GMC MILWAUKEE, WISCONSIN	MANNED SPACECRAFT CENTER HOUSTON, TEXAS
APPLICATION		DO NOT SCALE THIS DRAWING	ACSP PN	CABLE INTERCONNECT W52 ISS, OSS, TESTING
		MATERIAL	DRAWN T. KOSMOTKA DATE 7 NOV 63	
			CHECKED M. MANNING 12 NOV 63	
			APPROVAL R. B. LIGON 12 NOV 63	
			APPROVAL	
			NASA APPROVAL	CODE IDENT NO. / SIZE C / 1900979
		CONTRACT	MIT APPROVAL	SCALE NONE / SHEET 13 OF 13

MIL 1077C-P

APPLICATION		REVISIONS			
NEXT ASSY	USED ON	SYM	DESCRIPTION	DATE	APPROVAL
1901308	1900005-011	A	CHANGE IN ACCORDANCE WITH CM-193624 TDRR 03214	5-FEB-64	WK
		B	CHANGE IN ACCORDANCE WITH CM 195642 TDRR 03685	17 MAR 64	RHR PJ
		C	CHANGE IN ACCORDANCE WITH CM 195784 TDRR 03625 ADDED CUSTOMER DATA (V2-64)	7 APR 64	R.W.T. MEM
		D	CHANGE IN ACCORDANCE WITH CM196903 REVISED PER TDRR 09685	13 MAY 64	M.B. MEM
		M E	CHANGE IN ACCORDANCE WITH CM 197534 TDRR 10688 REVISED CUSTOMER DATA 12 64	28 MAY 64	RB MEM
		(M) F	CHANGE IN ACCORDANCE WITH CM 199016 TDRR 12260	30 JUL 64	JWP WK
		G	CHANGE IN ACCORDANCE WITH CM 199253 TDRR 14411	1 SEP 64	RJF PJ

FOR INFORMATION ONLY

CLASS B RELEASE TDR No. 05663 **DATE** 1/7/64

REV																									
SHEET																									
REV STATUS	REV	G	C	C	A	C	E	C	C	G	D	E	C	F											
OF SHEETS	SHEET	1	2	3	4	5	6	7	8	9	10	11	12	13											

AC SPARK PLUG DIVISION, GMC
MILWAUKEE, WISCONSIN

ACSP PN

DRAWN M. Hamming DATE 7/1/64
CHECKED R.E. LIGON 12 NOV 63
APPROVAL 12 NOV 63
APPROVAL L. Jedman 11/3/64

MANNED
SPACECRAFT CENTER
HOUSTON, TEXAS

CABLE INTERCONNECT W52
1SS, OSS, TESTING

NASA APPROVAL
MIT APPROVAL

CODE IDENT NO.	SIZE		REV
	A	1900979	G

CONTRACT NAS 9-497 | SCALE - | SHEET 1 OF 13

PENNANT NOTE	GENERAL NOTES
1	SEE CONDUCTOR CHART. PENNANT NOTE 1.
2	SEE CONDUCTOR CHART. PENNANT NOTE 2.
3	INTERPRET DRAWING IN ACCORDANCE WITH STANDARDS PRESCRIBED BY MIL-D-70327.
4	MARK CONDUCTOR IDENTIFICATION ON SINGLE CONDUCTORS PER ND1002019 OMITTING ALL SUFFIX LETTERS EXCEPT A AND B.
5	SPACING OF CONDUCTOR IDENTIFICATION SHALL BE EVERY 15 INCHES MAX. AND AT EACH TERMINATION.
6	SPIRALLING OF THE MARKING IS ALLOWED.
7	IDENTIFY USING DRAWING NO. AND REVISION LETTER PER MIL-STD-130 (ES-267). .12 INCH HIGH CHARACTERS WHITE.
8	Y OR N IN TINNED COLUMN INDICATES YES OR NO.
9	A LETTER WITH AN ASTERISK SUFFIX INDICATES A LOWER CASE LETTER.
10	VENDOR ITEM - SEE SPECIFICATION CONTROL DRAWING.
11	MARK IDENTIFICATION BAND WITH REFERENCE DESIGNATION AS NOTED .12 INCH HIGH COLOR WHITE. HOT IMPRESSION STAMPING PER ND1002019. CENTRALIZE.
12	MARK SLEEVING WITH REFERENCE DESIGNATION AS SHOWN .12 INCH HIGH. COLOR BLACK PER ND1002019.
13	MARK SLEEVING OF MULTI-CONDUCTORS WITH THE CONDUCTOR NUMBER .12 INCH HIGH. COLOR BLACK. PER ND1002019 WHEN SLEEVING ITEM NUMBERS FOLLOW AN A OR T IN THE ACCESSORIES ITEM NUMBER FIELD.

MANNED SPACECRAFT CENTER HOUSTON, TEXAS	SIZE A	1900979	
SCALE - NONE	REV LTR C		SHEET 2 OF 13

PENNANT NOTE	GENERAL NOTES
14	A OR T PREFIX IN THE ACCESSORIES ITEM NUMBER COLUMN INDICATES THE READING POSITION AWAY FROM TERMINATION OR TOWARD TERMINATION RESPECTIVELY, OF THE WIRE MARKER SLEEVE.
15	THE SUFFIX LETTER OF A CONDUCTOR IDENTIFICATION NUMBER INDICATES CONDUCTOR SHIELDING, COLOR, OR MARKING. A - FROM END SHIELD L - WHITE WITH BLUE TRACER R - WHITE WITH RED TRACER Y - WHITE WITH YELLOW TRACER W - WHITE
16	ASSEMBLE CONTACTS IN ALL CONNECTOR GROMMET HOLES.
17	SECURE TO CABLE USING ITEM 22. MARKING TO READ AWAY FROM CONNECTOR.
18	SEAL ZIPPER TUBING PER ND1002153.
19	SERIALIZE PER ND1002023.
20	ITEM 24 FURNISHED WITH ITEM 5.
21	ITEM 25 SHALL BE SHORTENED WHEN NECESSARY TO AVOID INTERFERENCE WITH FERRULES AND MAY BE CUT LENGTHWISE ON ONE SIDE. SELECT ONE OR MORE OF ITEM 25 AS REQUIRED TO FIT.
22	SEE NOTES 10 AND 16.

PENNANT NOTE	GENERAL NOTES
22	TOLERANCE CHART, UNLESS OTHERWISE SPECIFIED ---

APPLICABLE LENGTH FOR WIRE OR CABLE, STRIP WIRE, STRIP JACKET, CUT WIRE OR CUT SHIELD,	TOLERANCE				
	WIRE OR CABLE	STRIP WIRE	STRIP JACKET	CUT. WIRE	CUT. SHIELD
UNDER 1-INCH.	+.06-.00	+.03-.00	+.06-.06	+.08-.08	+.06-.06
1 INCH TO 6 INCHES	+.50-.00	+.06-.00	+.25-.25	+.25-.25	+.25-.25
6 INCHES TO 6 FEET	+1.00-.00		+.50-.50	+.50-.50	+.50-.50
OVER 6 FEET	+2.00-.00				

LIST OF MATERIALS

PENNANT NOTE	ITEM	QTY	PART NO	DESCRIPTION
	1	2	1900979-001	WIRE ND1002181 TYPE 2, CLASS 4, WHT. JAKT., 22AWG, WHT/BLU, WHT/RED, 208 FT. TOTAL LENGTH
	2	1	1900979-002	WIRE ND1002181 TYPE 1, CLASS 4, WHT. JAKT., 28AWG, WHT., 32 FT. TOTAL LENGTH
	3	1	1900979-003	WIRE ND1002181 TYPE 3, CLASS 4, WHT. JAKT., 22AWG, WHT/BLU, WHT/RED, WHT/YEL, 48 FT. TOTAL LENGTH
	4	1	1900979-004	WIRE ND1002181 TYPE 1, CLASS 1, 22AWG WHT., 36 FT. TOTAL LENGTH
16	5	1	MS3126F-24-61PY (1897047-613)	CONNECTOR PLUG
22	6	1	1010411-002	CONNECTOR PLUG
10	7	13	1000243-008	FERRULE ELECT. COND.
10	8	13	1000242-007	FERRULE ELECT. COND.
10	9	3	1000243-011	FERRULE ELECT. COND.
10	10	9	1000242-011	FERRULE ELECT. COND.
10	11	2	1000243-005	FERRULE ELECT. COND.
10	12	2	1000242-002	FERRULE ELECT. COND.
10	13	16	1010490-194	INSULATION SLEEVING ELECT.
10	14	16	1010490-196	INSULATION SLEEVING ELECT.
10	15	3	1010490-258	INSULATION SLEEVING ELECT.
10	16	2	1010490-198	INSULATION SLEEVING ELECT.

LIST OF MATERIALS

PENNANT NOTE	ITEM	QTY	PART NO	DESCRIPTION
10	17	2	1010490-200	INSULATION SLEEVING ELECT.
10	18	3	1016006-002	SPLICE REDUCER
10	19	1	1016128-011	BAND IDENTIFICATION
10	20	2	1016128-041	BAND IDENTIFICATION
	21	1	1900979-005	ZIPPER TUBING, ND1002155, TYPE 1, PLASTIC, FLEXIBLE, 1 IN. DIA. 16 FT. TOTAL LENGTH
	22	AR	MIL-T-713	LACING TAPE, TYPE P, CLASS 2, BLACK (ES-2732 NO. 18)
10	23	108	1010464-002	CONTACT SOCKET
20	24			CONTACT PINS
21	25	AR		1897147-104, 106, 108, 112, 116, CABLE CLAMP SLEEVE
10	26	1	1016282-024	RUBBER GROMMET
10	27	1	1015902- 46	TERMINAL LUG
	28	1	1900979-006	TUBING, MODIFIED POLYVINYL CHLORIDE FLEXIBLE, SHRINK-FIT PER 1016197-006 6 INCH TOTAL LENGTH

GIK CABLE W52 C 1900979

CONDUCTOR NUMBER	INDIVIDUAL LENGTH	ITEM NO. (2)	FROM CUT WIRE OR SHIELD STRIP WIRE OR JACKET	FROM CIRCUIT POINT	FROM TERMINATION SPEC. (1)	FROM ITEM NO.	FROM NO.	TO CUT WIRE OR SHIELD STRIP WIRE OR JACKET	TO CIRCUIT POINT	TO TERMINATION SPEC. (1)	TO ITEM NO.	TO NO.
A 1	1			23Q 20Q	7 8	A 13	5		23Q 20Q	A 14	7A	
A 1A	4		SHLD A1	25N				E1	25N			
A 1L			P1-Z	19N	24			P2- 14	10N	23		
A 1R			P1-Y	19N	24			P2- 1	10N	23		
A 2	1			23Q 20Q	7 8	A 13	5		23Q 20Q	A 14	7A	
A 2A	4		SHLD A2	25N				E1	25N			
A 2L			P1-C*	19N	24			P2- 57	10N	23		
A 2R			P1-B*	19N	24			P2- 67	10N	23		
A 3	1			23Q 20Q	7 8	A 13	5		23Q 20Q	A 14	7A	
A 3A	4		SHLD A3	25N				E1	25N			
A 3L			P1-E*	19N	24			P2- 56	10N	23		
A 3R			P1-D*	19N	24			P2- 66	10N	23		
A 4	*2			23Q 20Q	11 12	A 16	5		23Q 20Q	A 17	7A	
A 4A	4		SHLD A4	25N				E1	25N			

(1) THE STD CONDUCTOR TERMINATION FIGURES ARE PER
(2) DIMENSIONS ARE IN INCHES AND TWO PLACE DECIMALS.

MANNED SPACECRAFT CENTER HOUSTON, TEXAS | SIZE A | 1900979
SCALE - NONE | REV LTR C | SHEET 7 OF 13

GIK CABLE W52 C 1900979

CONDUCTOR NUMBER	INDIVIDUAL LENGTH	ITEM NO. (2)	FROM CUT WIRE OR SHIELD STRIP WIRE OR JACKET	FROM CIRCUIT POINT	FROM TERMINATION SPEC. (1)	FROM ITEM NO.	FROM NO.	TO CUT WIRE OR SHIELD STRIP WIRE OR JACKET	TO CIRCUIT POINT	TO TERMINATION SPEC. (1)	TO ITEM NO.	TO NO.
A 4W			P1-F*	19N	24			P2- 34	10N	23		
A 5	1			28Q 25Q	7 8	A 13	5		28Q 25Q	A 14	7A	
A 5A	4		SHLD A5	25N				E1	25N			
A 5L			P1-H*	19N	24			P2- 45	10N	23		
A 5R			P1-G*	19N	24			P2- 35	10N	23		
A 6	1			28Q 25Q	7 8	A 13	5		28Q 25Q	A 14	7A	
A 6A	4		SHLD A6	25N				E1	25N			
A 6L			P1-J*	19N	24			P2- 20	10N	23		
A 6R			P1-I*	19N	24			P2- 6	10N	23		
A 7	1			28Q 25Q	7 8	A 13	5		28Q 25Q	A 14	7A	
A 7A	4		SHLD A7	25N				E2	25N			
A 7L			P1-M*	19N	24			P2- 21	10N	23		
A 7R			P1-K*	19N	24			P2- 7	10N	23		
A 8	1			28Q 25Q	7 8	A 13	5		28Q 25Q	A 14	7A	

(1) THE STD CONDUCTOR TERMINATION FIGURES ARE PER
(2) DIMENSIONS ARE IN INCHES AND TWO PLACE DECIMALS.

MANNED SPACECRAFT CENTER HOUSTON, TEXAS | SIZE A | 1900979
SCALE - NONE | REV LTR C | SHEET 8 OF 13

GIK CABLE W52 G 1900979

CONDUCTOR NUMBER	INDIVIDUAL LENGTH	ITEM NO. (2)	FROM CUT WIRE OR SHIELD STRIP WIRE OR JACKET	FROM CIRCUIT POINT	FROM TERMINATION SPEC. (1)	FROM ITEM NO.	FROM NO.	TO CUT WIRE OR SHIELD STRIP WIRE OR JACKET	TO CIRCUIT POINT	TO TERMINATION SPEC. (1)	TO ITEM NO.	TO NO.
A 8A	4		SHLD A8	25N				E2	25N			
A 8L			P1-P*	19N	24			P2- 90	10N	23		
A 8R			P1-N*	19N	24			P2-104	10N	23		
A 9	2			33Q 30Q	11 12	A 16	5		33Q 30Q	A 17	7A	
A 9A	4		SHLD A9	25N				E2	25N			
A 9W			P1-Q*	19N	24			P2- 89	10N	23		
A 10	1			33Q 30Q	7 8	A 13	5		33Q 30Q	A 14	7A	
A 10A	4		SHLD A10	25N				E2	25N			
A 10L			P1-S*	19N	24			P2- 86	10N	23		
A 10R			P1-R*	19N	24			P2-100	10N	23		
A 11	1			33Q 30Q	7 8	A 13	5		33Q 30Q	A 14	7A	
A 11A	4		SHLD A11	25N				E2	25N			
A 11L			P1-U*	19N	24			P2-101	10N	23		
A 11R			P1-T*	19N	24			P2- 87	10N	23		
A 12	3			33Q 30Q	9 10		5		33Q 30Q	A 14	7A	

(1) THE STD CONDUCTOR TERMINATION FIGURES ARE PER
(2) DIMENSIONS ARE IN INCHES AND TWO PLACE DECIMALS.

MANNED SPACECRAFT CENTER HOUSTON, TEXAS | SIZE A | 1900979
SCALE - NONE | REV LTR G | SHEET 9 OF 13

GIK CABLE W52 D 1900979

CONDUCTOR NUMBER	INDIVIDUAL LENGTH	ITEM NO. (2)	FROM CUT WIRE OR SHIELD STRIP WIRE OR JACKET	FROM CIRCUIT POINT	FROM TERMINATION SPEC. (1)	FROM ITEM NO.	FROM NO.	TO CUT WIRE OR SHIELD STRIP WIRE OR JACKET	TO CIRCUIT POINT	TO TERMINATION SPEC. (1)	TO ITEM NO.	TO NO.
						A 13						
A 12A	4		SHLD A12	25N					19N	24		
A 12L			P1-W*	19N	24			P2-108	10N	23		
A 12R			P1-V*	19N	24			P2-107	10N	23		
A 12Y			P1-X*	19N	24			P2- 94	10N	23		
A 13	1			38Q 35Q	7 8	A 13	5		38Q 35Q	A 14	7A	
A 13A	4		SHLD A13	25N				E3	25N			
A 13L			P1-Z*	19N	24			P2- 60	10N	23		
A 13R			P1-Y*	19N	24			P2- 50	10N	23		
A 14	1			38Q 35Q	7 8	A 13	5		38Q 35Q	A 14	7A	
A 14A	4		SHLD A14	25N				E3	25N			
A 14L			P1-CC	19N	24			P2- 2	10N	23		
A 14R			P1-BB	19N	24			P2- 3	10N	23		
A 15	1			38Q 35Q	7 8	A 13	5		38Q 35Q	A 14	7A	
A 15A	4		SHLD A15	25N				E3	25N			

(1) THE STD CONDUCTOR TERMINATION FIGURES ARE PER
(2) DIMENSIONS ARE IN INCHES AND TWO PLACE DECIMALS.

MANNED SPACECRAFT CENTER HOUSTON, TEXAS | SIZE A | 1900979
SCALE - NONE | REV LTR D | SHEET 10 OF 13

61K CABLE W52 E 1900979

CONDUCTOR INDIVIDUAL LENGTH NUMBER	ITEM NO (2)	FROM CUT WIRE OR SHIELD STRIP WIRE OR JACKET CIRCUIT POINT (2)	(5)	TERMINATION SPEC (1)	ITEM NO	NO.	TO CUT WIRE OR SHIELD STRIP WIRE OR JACKET CIRCUIT POINT (2)	(5)	TERMINATION SPEC (1)	ITEM NO	NO
A 15L		P1-FF	19N		24		P2- 2	10N		23	
A 15R		P1-EE	19N		24		P2-106	10N		23	
A 16	3		380	350	9 10	5		380	350	A 14	7A
					A 13						
A 16A	4	SHLD A16	25N				E3	25N			
A 16L		P1-HH	19N		24		P2- 31	10N		23	
A 16R		P1-GG	19N		24		P2- 32	10N		23	
A 16Y		P1-JJ	19N		24		P2- 43	10N		23	
A 17	1		430	400	7 8	5		430	400	A 14	7A
					A 13						
A 17A	4	SHLD A17	25N				E3	25N			
A 17L		P1-LL	19N		24		P2- 29	10N		23	
A 17R		P1-KK	19N		24		P2- 28	10N		23	
A 18	4	P3- 1	25N		27		P2- 41	10N		23	
A 19	3		430	400	9 10	5		430	400	A 14	7A
					A 13						
A 19A	4	SHLD A19	25N				E3	25N			
A 19L		P1-MM	19N		24		P2- 11	10N		23	

(1) THE STD CONDUCTOR TERMINATION FIGURES ARE PER
(2) DIMENSIONS ARE IN INCHES AND TWO PLACE DECIMALS.

MANNED SPACECRAFT CENTER HOUSTON, TEXAS | SIZE A | 1900979
SCALE - NONE | REV LTR E | SHEET 11 OF 13

GIK CABLE W52 C 1900979

CONDUCTOR INDIVIDUAL LENGTH NUMBER	ITEM NO (2)	FROM CUT WIRE OR SHIELD STRIP WIRE OR JACKET CIRCUIT POINT (2)	(5)	TERMINATION SPEC (1)	ITEM NO	NO	TO CUT WIRE OR SHIELD STRIP WIRE OR JACKET CIRCUIT POINT (2)	(5)	TERMINATION SPEC (1)	ITEM NO	NO
A 19R		P1-NN	19N		24		P2- 25	10N		23	
A 19Y		P1-PP	19N		24		P2- 12	10N		23	
A 20	4	P1-B	19N		24		E1	25N			
A 21	4	E2	25N				E1	25N			
A 22	4	E3	25N				E2	25N			
A 23		DELETED									

(1) THE STD CONDUCTOR TERMINATION FIGURES ARE PER
(2) DIMENSIONS ARE IN INCHES AND TWO PLACE DECIMALS

MANNED SPACECRAFT CENTER HOUSTON, TEXAS | SIZE A | 1900979
SCALE - NONE | REV LTR C | SHEET 12 OF 13

1900979

REVISIONS					
SYM	ZONE	DESCRIPTION	CHG NO.	DATE	APPD.
		SEE SHEET 1 FOR REVISION RECORD			

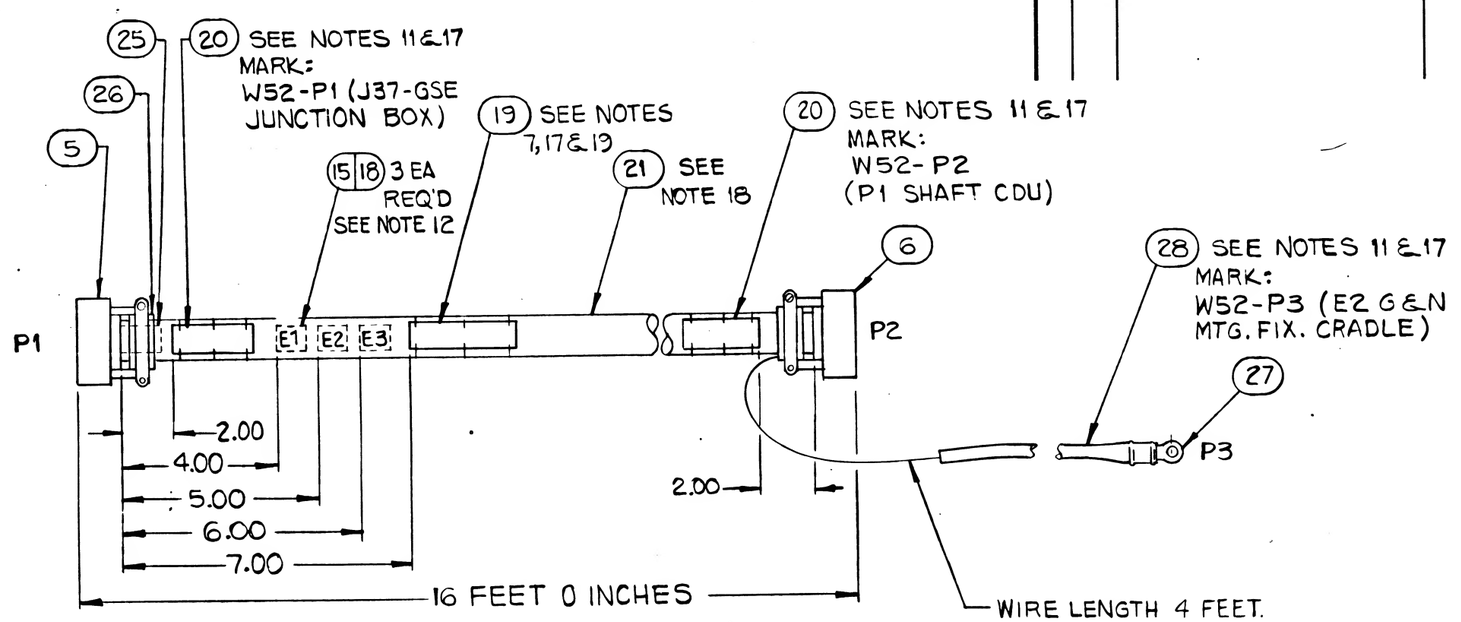

LOCATION TOLERANCE
(EXCEPT LENGTH): ±.50

NEXT ASSY	USED ON	UNLESS OTHERWISE SPECIFIED DIMENSIONS ARE IN INCHES TOLERANCES ON FRACTIONS + — DECIMALS + — ANGLES + —	AC SPARK PLUG DIVISION, GMC MILWAUKEE, WISCONSIN	MANNED SPACECRAFT CENTER HOUSTON, TEXAS
APPLICATION		DO NOT SCALE THIS DRAWING	ACSP PN	CABLE INTERCONNECT W52 ISS, OSS, TESTING
		MATERIAL	DRAWN T. KOSMOTKA DATE 7 NOV 63	
			CHECKED M. MANNING 12 NOV 63	
			APPROVAL R. B. LIGON 12 NOV 63	
			APPROVAL F. Hensley 3 SEP 64	
		CONTRACT	NASA APPROVAL	CODE IDENT NO. / SIZE C / 1900979
			MIT APPROVAL	SCALE NONE / SHEET 13 OF 13

MIL 1077C-P

REVISIONS

SYM	DESCRIPTION	DATE	APPROVAL
J	REVISED PER CM-305324. TDRR 15758	11 DEC 64	JWW / W.S.

MANNED SPACECRAFT CENTER HOUSTON, TEXAS

REVISION J

NASA DRAWING NO. 1900979 SHEET 1A OF 15

GIK CABLE W52 H 1900979

PENNANT NOTE	GENERAL NOTES
1	SEE CONDUCTOR CHART, PENNANT NOTE 1.
2	SEE CONDUCTOR CHART, PENNANT NOTE 2.
3	INTERPRET DRAWING IN ACCORDANCE WITH STANDARDS PRESCRIBED BY MIL-D-70327.
4	MARK CONDUCTOR IDENTIFICATION ON SINGLE CONDUCTORS PER ND1002019 OMITTING ALL SUFFIX LETTERS EXCEPT A AND B.
5	SPACING OF CONDUCTOR IDENTIFICATION SHALL BE EVERY 15 INCHES MAX. AND AT EACH TERMINATION.
6	SPIRALLING OF THE MARKING IS ALLOWED.
7	IDENTIFY USING DRAWING NO. AND REVISION LETTER PER MIL-STD-130 (ES-267). .12 INCH HIGH CHARACTERS WHITE.
8	Y OR N IN TINNED COLUMN INDICATES YES OR NO.
9	A LETTER WITH AN ASTERISK SUFFIX INDICATES A LOWER CASE LETTER.
10	VENDOR ITEM - SEE SPECIFICATION CONTROL DRAWING.
11	MARK IDENTIFICATION BAND WITH REFERENCE DESIGNATION AS NOTED .12 INCH HIGH COLOR WHITE, HOT IMPRESSION STAMPING PER ND1002019. CENTRALIZE.
12	MARK SLEEVING WITH REFERENCE DESIGNATION AS SHOWN .12 INCH HIGH, COLOR BLACK PER ND1002019.
13	MARK SLEEVING OF MULTI-CONDUCTORS WITH THE CONDUCTOR NUMBER .12 INCH HIGH, COLOR BLACK, PER ND1002019 WHEN SLEEVING ITEM NUMBERS FOLLOW AN A OR T IN THE ACCESSORIES ITEM NUMBER FIELD.

MANNED SPACECRAFT CENTER HOUSTON, TEXAS	SIZE A	1900979	
SCALE - NONE	REV LTR H		SHEET 2 OF 15

MIL 2104 4-63

REVISIONS TDRR 05663

SYM	DESCRIPTION	DATE	APPROVAL
A	CHANGE IN ACCORDANCE WITH CM-193624 TDRR 04	5 FEB 64	HTL WS
B	CHANGE IN ACCORDANCE WITH CM 195642 TDRR	17 MAR 64	RAR DF
C	CHANGE IN ACCORDANCE WITH CM 195784 TDRR 05623 ADDED CUSTOMER DATA (V2-64)	7 APR 64	R.W.T. MEM
D	CHANGE IN ACCORDANCE WITH CM 196903 REVISED PER TDRR 09625	13 MAY 64	M.B. MEM
E	CHANGE IN ACCORDANCE WITH CM 197534 TDRR 10688 REVISED CUSTOMER DATA V2-64	28 MAY 64	RB MEM
F	CHANGE IN ACCORDANCE WITH CM 199016 TDRR 12260	30 JUN 64	JWP WS
G	CHANGE IN ACCORDANCE WITH CM 199253 TDRR 14411	1 SEP 64	RJF DF
H	CHANGE IN ACCORDANCE WITH CM 302649 TDRR 15407	16 SEP 64	RAR CF

CONTINUED ON PAGE 1A (ADDED) 11/4/65

APPLICATION	
NEXT ASSY	USED ON
1901308	1900005-011

REV	J	H	H	H	H	J	H	H	H	H	H	H	H	H
SHEET	1	2	3	4	5	6	7	8	9	10	11	12	13	14	15

REV STATUS J OF SHEETS 1A

AC SPARK PLUG DIVISION, GMC MILWAUKEE, WISCONSIN

ACSP PN

MANNED SPACECRAFT CENTER HOUSTON, TEXAS

CABLE INTERCONNECT W52
1SS, OSS, TESTING

DRAWN W. Hennessy DATE 7 MAY 63
CHECKED 12 NOV 63
APPROVAL 12 NOV 63
APPROVAL L. Delaney 1/3/64

NASA APPROVAL
MIT APPROVAL

CONTRACT NAS 9-497

REV J

CODE IDENT NO. SIZE A 1900979

SCALE - SHEET 1 OF 15

GIK CABLE W52 H 1900979

PENNANT NOTE	GENERAL NOTES
14	A OR T PREFIX IN THE ACCESSORIES ITEM NUMBER COLUMN INDICATES THE READING POSITION AWAY FROM TERMINATION OR TOWARD TERMINATION RESPECTIVELY, OF THE WIRE MARKER SLEEVE.
15	THE SUFFIX LETTER OF A CONDUCTOR IDENTIFICATION NUMBER INDICATES CONDUCTOR SHIELDING, COLOR, OR MARKING. A - FROM END SHIELD L - WHITE WITH BLUE TRACER R - WHITE WITH RED TRACER Y - WHITE WITH YELLOW TRACER W - WHITE
16	ASSEMBLE CONTACTS IN ALL CONNECTOR GROMMET HOLES.
17	SECURE TO CABLE USING ITEM 22. MARKING TO READ AWAY FROM CONNECTOR.
18	SEAL ZIPPER TUBING PER ND1002153.
19	SERIALIZE PER ND1002023.
20	ITEM 24 FURNISHED WITH ITEM 5.
21	ITEM 25 SHALL BE SHORTENED WHEN NECESSARY TO AVOID INTERFERENCE WITH FERRULES AND MAY BE CUT LENGTHWISE ON ONE SIDE. SELECT ONE OR MORE OF ITEM 25 AS REQUIRED TO FIT.
22	SEE NOTES 10 AND 16.

MANNED SPACECRAFT CENTER HOUSTON, TEXAS	SIZE A	1900979	
SCALE - NONE	REV LTR H		SHEET 3 OF 15

MIL 2104 4-63

PENNANT LIST OF MATERIALS

NOTE	ITEM	QTY	PART NO	DESCRIPTION
	1	1	1900979-001	WIRE ND1002181 TYPE 2, CLASS 4, WHT, JAKT, 22AWG, WHT/BLU, WHT/RED, 176 FT. TOTAL LENGTH
	2	1	1900979-002	WIRE ND1002181 TYPE 1, CLASS 4, WHT, JAKT, 22AWG, WHT., 16 FT. TOTAL LENGTH
	3	1	1900979-003	WIRE ND1002181 TYPE 3, CLASS 4, WHT, JAKT, 22AWG, WHT/BLU, WHT/RED, WHT/YEL, 37 FT. TOTAL LENGTH
	4	1	1900979-004	WIRE ND1002181 TYPE 1, CLASS 1, 22AWG WHT., 36 FT. TOTAL LENGTH
16	5	1	MS3126F-24-61PY (1897047-613)	CONNECTOR PLUG
22	6	1	1010411-002	CONNECTOR PLUG
10	7	11	1000243-008	FERRULE ELECT. COND.
10	8	11	1000242-007	FERRULE ELECT. COND.
10	9	3	1000243-011	FERRULE ELECT. COND.
10	10	3	1000242-011	FERRULE ELECT. COND.
10	11	1	1000243-003	FERRULE ELECT. COND.
10	12	1	1000242-002	FERRULE ELECT. COND.
10	13	16	1010490-194	INSULATION SLEEVING ELECT.
10	14	16	1010490-196	INSULATION SLEEVING ELECT.
10	15	3	1010490-258	INSULATION SLEEVING ELECT.
10	16	2	1010490-198	INSULATION SLEEVING ELECT.

PENNANT LIST OF MATERIALS

NOTE	ITEM	QTY	PART NO	DESCRIPTION
10	17	1	1010490-200	INSULATION SLEEVING ELECT.
10	18	3	1016006-002	SPLICE REDUCER
10	19	1	1016128-011	BAND IDENTIFICATION
10	20	2	1016128-041	BAND IDENTIFICATION
	21	1	1900979-005	ZIPPER TUBING, ND1002155, TYPE 1, PLASTIC, FLEXIBLE, 1 IN. DIA. 16 FT. TOTAL LENGTH
	22	AR	MIL-T-713	LACING TAPE, TYPE P, CLASS 2, BLACK (ES-2732 NO. 18)
10	23	108	1010464-002	CONTACT SOCKET
20	24			CONTACT PINS
21	25	AR		1897147-104, 106, 108, 112, 116, CABLE CLAMP SLEEVE
10	26	1	1016282-024	RUBBER GROMMET
10	27	1	1015902- 46	TERMINAL LUG
	28	1	1900979-006	TUBING, MODIFIED POLYVINYL CHLORIDE FLEXIBLE, SHRINK-FIT PER 1016197-006 6 INCH TOTAL LENGTH
	29	1	1900979-007	WIRE COAXIAL MIL-C-17/69A RG188A/U 9 FEET TOTAL LENGTH
	30	2	1000243-006	FERRULE ELECT. COND.
	31	2	1000242-005	FERRULE ELECT. COND.
	32	4	1016369-420	PIN CONTACT

PENNANT GENERAL NOTES

NOTE

22 TOLERANCE CHART, UNLESS OTHERWISE SPECIFIED ---

APPLICABLE LENGTH FOR WIRE OR CABLE, STRIP WIRE, STRIP JACKET, CUT WIRE OR CUT SHIELD.

	TOLERANCE				
	WIRE OR CABLE	STRIP WIRE	STRIP JACKET	CUT WIRE	CUT SHIELD
UNDER 1 INCH	+ .06-.00	+.03-.00	+.06-.06	+.06-.06	+.06-.06
1 INCH TO 6 INCHES	+ .50-.00	+.06-.00	+.25-.25	+.25-.25	+.25-.25
6 INCHES TO 6 FEET	+1.00-.00		+.50-.50	+.50-.50	+.50-.50
OVER 6 FEET	+2.00-.00				

PENNANT LIST OF MATERIALS

NOTE	ITEM	QTY	PART NO	DESCRIPTION
	33	2	1016369-288	OUTER MALE BODY
	34	2	1016369-588	HYRING
	35	2	1016369-388	INNER FEMALE CONTACT
	36	4	1010490-202	INSULATION SLEEVING ELEC
	37	1	1900979-008	TUBING MODIFIED POLYVINYL CHLORIDE FLEXIBLE, SHRINKFIT PER 1016197-007 4.5 FEET TOTAL LENGTH
	38	1	1016369-140	CONNECTOR
	39	1	1902171-001	POLARIZATION SHELL
	40	1	1900979-009	ZIPPER TUBING ND1002155, TYPE I PLASTIC FLEXIBLE 1 1/2 INCH DIA., 5 INCHES TOTAL LENGTH

GIK CABLE W52 H 1900979

CONDUCTOR NUMBER	CONDUCTOR ITEM NO.	CONDUCTOR INDIVIDUAL LENGTH [2]	FROM CUT WIRE OR SHIELD / STRIP WIRE OR JACKET / CIRCUIT POINT [2]	FROM TIN [2]	FROM TERMINATION SPEC. [1]	FROM TERMINATION ITEM NO.	FROM NO.	TO CUT WIRE OR SHIELD / STRIP WIRE OR JACKET / CIRCUIT POINT [2]	TO TIN [2]	TO TERMINATION SPEC [1]	TO TERMINATION ITEM NO.	TO NO.
A 4W			P1-F*	19N		24		P2- 34	10N		23	
A 5	1			280	250	7 8	5		280	250	A 14	7A
						A 13						
A 5A	4		SHLD A5	25N				E1	25N			
A 5L			P1-H*	19N		24		P2- 45	10N		23	
A 5R			P1-G*	19N		24		P2- 35	10N		23	
A 6	1			280	250	7 8	5		280	250	A 14	7A
						A 13						
A 6A	4		SHLD A6	25N				E1	25N			
A 6L			P1-J*	19N		24		P2- 20	10N		23	
A 6R			P1-I*	19N		24		P2- 6	10N		23	
A 7	1			280	250	7 8	5		280	250	A 14	7A
						A 13						
A 7A	4		SHLD A7	25N				E2	25N			
A 7L			P1-M*	19N		24		P2- 21	10N		23	
A 7R			P1-K*	19N		24		P2- 7	10N		23	
A 8			DELETED									
			DELETED									

[1] THE STD CONDUCTOR TERMINATION FIGURES ARE PER
[2] DIMENSIONS ARE IN INCHES AND TWO PLACE DECIMALS.

MANNED SPACECRAFT CENTER HOUSTON, TEXAS | SIZE A | 1900979
SCALE - NONE | REV LTR H | SHEET 9 OF 15

MIL 2085 - 4-63 WIR

GIK CABLE W52 H 1900979

CONDUCTOR NUMBER	CONDUCTOR ITEM NO.	CONDUCTOR INDIVIDUAL LENGTH [2]	FROM CUT WIRE OR SHIELD / STRIP WIRE OR JACKET / CIRCUIT POINT [2]	FROM TIN [2]	FROM TERMINATION SPEC. [1]	FROM TERMINATION ITEM NO.	FROM NO.	TO CUT WIRE OR SHIELD / STRIP WIRE OR JACKET / CIRCUIT POINT [2]	TO TIN [2]	TO TERMINATION SPEC [1]	TO TERMINATION ITEM NO.	TO NO.
A 8A			DELETED									
A 8L			DELETED									
A 8R			DELETED									
A 9			DELETED									
			DELETED									
A 9A			DELETED									
A 9W			DELETED									
A 10	1			330	300	7 8	5		330	300	A 14	7A
						A 13						
A 10A	4		SHLD A10	25N				E2	25N			
A 10L			P1-S*	19N		24		P2- 86	10N		23	
A 10R			P1-R*	19N		24		P2-100	10N		23	
A 11	1			330	300	7 8	5		330	300	A 14	7A
						A 13						
A 11A	4		SHLD A11	25N				E2	25N			
A 11L			P1-U*	19N		24		P2-101	10N		23	
A 11R			P1-T*	19N		24		P2- 87	10N		23	
A 12			DELETED									

[1] THE STD CONDUCTOR TERMINATION FIGURES ARE PER
[2] DIMENSIONS ARE IN INCHES AND TWO PLACE DECIMALS.

MANNED SPACECRAFT CENTER HOUSTON, TEXAS | SIZE A | 1900979
SCALE - NONE | REV LTR H | SHEET 10 OF 15

MIL 2085 - 4-63 WIR

GIK CABLE W52 H 1900979

CONDUCTOR NUMBER	CONDUCTOR ITEM NO.	CONDUCTOR INDIVIDUAL LENGTH [2]	FROM CUT WIRE OR SHIELD / STRIP WIRE OR JACKET / CIRCUIT POINT [2]	FROM TIN [2]	FROM TERMINATION SPEC. [1]	FROM TERMINATION ITEM NO.	FROM NO.	TO CUT WIRE OR SHIELD / STRIP WIRE OR JACKET / CIRCUIT POINT [2]	TO TIN [2]	TO TERMINATION SPEC [1]	TO TERMINATION ITEM NO.	TO NO.
A 1	1			230	200	7 8	5		230	200	A 14	7A
						A 13						
A 1A	4		SHLD A1	25N				E1	25N			
A 1L			P1-Z	19N		24		P2- 14	10N		23	
A 1R			P1-Y	19N		24		P2- 1	10N		23	
A 2	1			230	200	7 8	5		230	200	A 14	7A
						A 13						
A 2A	4		SHLD A2	25N				E1	25N			
A 2L			P1-C*	19N		24		P2- 57	10N		23	
A 2R			P1-B*	19N		24		P2- 67	10N		23	
A 3	1			230	200	7 8	5		230	200	A 14	7A
						A 13						
A 3A	4		SHLD A3	25N				E1	25N			
A 3L			P1-E*	19N		24		P2- 56	10N		23	
A 3R			P1-D*	19N		24		P2- 66	10N		23	
A 4	2			230	200	11 12	5		230	200	A 17	7A
						A 16						
A 4A	4		SHLD A4	25N				E1	25N			

[1] THE STD CONDUCTOR TERMINATION FIGURES ARE PER
[2] DIMENSIONS ARE IN INCHES AND TWO PLACE DECIMALS.

MANNED SPACECRAFT CENTER HOUSTON, TEXAS | SIZE A | 1900979
SCALE - NONE | REV LTR H | SHEET 8 OF 15

MIL 2085 - 4-63 WIR

GIK CABLE W52 H 1900979

CONDUCTOR NUMBER	CONDUCTOR ITEM NO.	CONDUCTOR INDIVIDUAL LENGTH [2]	FROM CUT WIRE OR SHIELD / STRIP WIRE OR JACKET / CIRCUIT POINT [2]	FROM TIN [2]	FROM TERMINATION SPEC. [1]	FROM TERMINATION ITEM NO.	FROM NO.	TO CUT WIRE OR SHIELD / STRIP WIRE OR JACKET / CIRCUIT POINT [2]	TO TIN [2]	TO TERMINATION SPEC [1]	TO TERMINATION ITEM NO.	TO NO.
			DELETED									
A 12A			DELETED									
A 12L			DELETED									
A 12R			DELETED									
A 12Y			DELETED									
A 13	1			380	350	7 8	5		380	350	A 14	7A
						A 13						
A 13A	4		SHLD A13	25N				E3	25N			
A 13L			P1-Z*	19N		24		P2- 60	10N		23	
A 13R			P1-Y*	19N		24		P2- 50	10N		23	
A 14	1			380	350	7 8	5		380	350	A 14	7A
						A 13						
A 14A	4		SHLD A14	25N				E3	25N			
A 14L			P1-CC	19N		24		P2- 2	10N		23	
A 14R			P1-BB	19N		24		P2- 3	10N		23	
A 15			DELETED									
			DELETED									
A 15A			DELETED									

[1] THE STD CONDUCTOR TERMINATION FIGURES ARE PER
[2] DIMENSIONS ARE IN INCHES AND TWO PLACE DECIMALS.

MANNED SPACECRAFT CENTER HOUSTON, TEXAS | SIZE A | 1900979
SCALE - NONE | REV LTR H | SHEET 11 OF 15

MIL 2085 - 4-63 WIR

GIK CABLE W52 H 1900979

CONDUCTOR NUMBER	INDIVIDUAL LENGTH ITEM NO.	[2]	FROM CUT WIRE OR SHIELD STRIP WIRE OR JACKET CIRCUIT POINT	[2]	TIN	[2]	TERMINATION SPEC. ITEM NO.	[1]	NO.	TO CUT WIRE OR SHIELD STRIP WIRE OR JACKET CIRCUIT POINT	[2]	TIN	[2]	TERMINATION SPEC ITEM NO.	[1]	NO.
A 15L			DELETED													
A 15R			DELETED													
A 16	3			380		350	9 10		5		380		350	A 14		7A
							A 13									
A 16A	4		SHLD A16	25N						E3	25N					
A 16L			P1-HH	19N			24			P2- 31	10N			23		
A 16R			P1-GG	19N			24			P2- 32	10N			23		
A 16Y			P1-JJ	19N			24			P2- 43	10N			23		
A 17	1			430		400	7 8		5		430		400	A 14		7A
							A 13									
A 17A	4		SHLD A17	25N						E3	25N					
A 17L			P1-LL	19N			24			P2- 29	10N			23		
A 17R			P1-KK	19N			24			P2- 28	10N			23		
A 18	4		P3- 1	25N			27			P2- 41	10N			23		
A 19	3			430		400	9 10		5		430		400	A 14		7A
							A 13									
A 19A	4		SHLD A19	25N						E3	25N					
A 19L			P1-MM	19N			24			P2- 11	10N			23		

[1] THE STD CONDUCTOR TERMINATION FIGURES ARE PER
[2] DIMENSIONS ARE IN INCHES AND TWO PLACE DECIMALS.

MANNED SPACECRAFT CENTER HOUSTON, TEXAS | SIZE A | 1900979
SCALE - NONE | REV LTR H | SHEET 12 OF 15

MIL 2088 - 4-63 WIR

GIK CABLE W52 H 1900979

CONDUCTOR NUMBER	INDIVIDUAL LENGTH ITEM NO.	[2]	FROM CUT WIRE OR SHIELD STRIP WIRE OR JACKET CIRCUIT POINT	[2]	TIN	[2]	TERMINATION SPEC. ITEM NO.	[1]	NO.	TO CUT WIRE OR SHIELD STRIP WIRE OR JACKET CIRCUIT POINT	[2]	TIN	[2]	TERMINATION SPEC ITEM NO.	[1]	NO.
A 19R			P1-NN	19N			24			P2- 25	10N			23		
A 19Y			P1-PP	19N			24			P2- 12	10N			23		
A 20	4		P1-B	19N			24			E1	25N					
A 21	4		E2	25N						E1	25N					
A 22	4		E3	25N						E2	25N					
A 23			DELETED													
A 24	29			280		250	30 31		5		56			A 36		
							A 36									
A 24A	4		SHLD A24	37N						P2- 92	10N			23		
A 24W			P2-106	10N			23			P4-D	18			35		
A 24B			SHLD A24							P4-D SHLD		N	25	33 34		
A 25	4		P2- 89	10N			23			P4-M	79N			32		
A 26	3			330		300	A 14		7A		330		300	9 10		5
														A 13		
A 26B	4		SHLD A26	37N						P4-B	19N					
A 26R			P2-107	19N			23			P4-E	19N			32		
A 26L			P2-108	19N			23			P4-F	19N			32		
A 26Y			P2- 94	19N			23			P4-B	19N			32		

[1] THE STD CONDUCTOR TERMINATION FIGURES ARE PER
[2] DIMENSIONS ARE IN INCHES AND TWO PLACE DECIMALS.

MANNED SPACECRAFT CENTER HOUSTON, TEXAS | SIZE A | 1900979
SCALE - NONE | REV LTR H | SHEET 13 OF 15

MIL 2088 - 4-63 WIR

GIK CABLE W52 H 1900979

CONDUCTOR NUMBER	INDIVIDUAL LENGTH ITEM NO.	[2]	FROM CUT WIRE OR SHIELD STRIP WIRE OR JACKET CIRCUIT POINT	[2]	TIN	[2]	TERMINATION SPEC. ITEM NO.	[1]	NO.	TO CUT WIRE OR SHIELD STRIP WIRE OR JACKET CIRCUIT POINT	[2]	TIN	[2]	TERMINATION SPEC ITEM NO.	[1]	NO.
A 27	29			330		300	30 31		5		56			A 36		
							A 36									
A 27A	4		SHLD A27	37N						P2- 90	10N			23		
A 27W			P2-104	10N			23			P4-J	18			35		
A 27B			SHLD A27							P4-J SHLD		N	25	33 34		

[1] THE STD CONDUCTOR TERMINATION FIGURES ARE PER
[2] DIMENSIONS ARE IN INCHES AND TWO PLACE DECIMALS.

MANNED SPACECRAFT CENTER HOUSTON, TEXAS | SIZE A | 1900979
SCALE - NONE | REV LTR H | SHEET 14 OF 15

MIL 2088 - 4-63 WIR

REVISIONS					
SYM	ZONE	DESCRIPTION	CHG NO.	DATE	APPD.
H		SEE SHEET 1 FOR REVISION RECORD This sheet was added.		1/24/65	WK

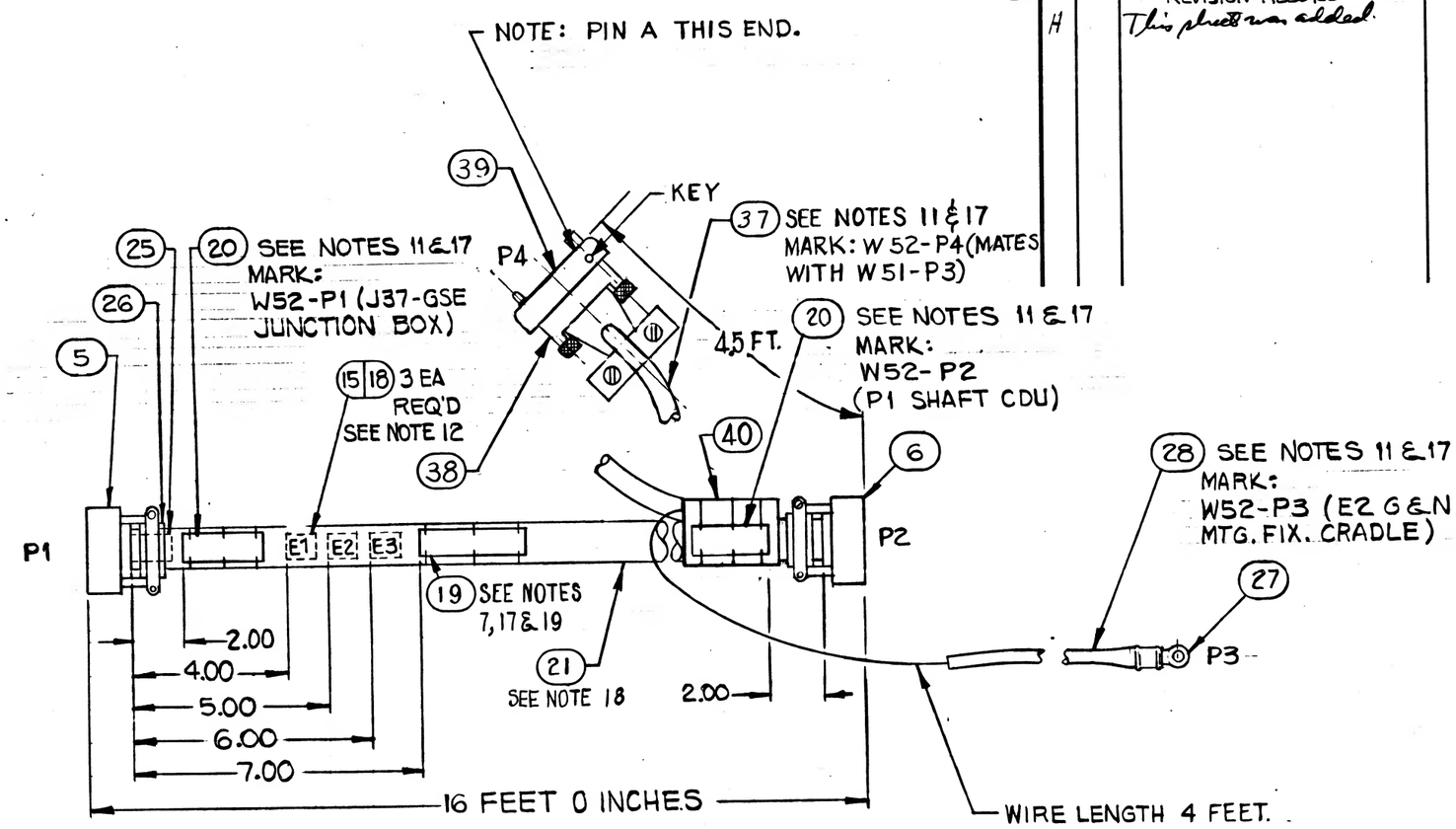

LOCATION TOLERANCE
(EXCEPT LENGTH): ±.50

NEXT ASSY	USED ON
APPLICATION	

UNLESS OTHERWISE SPECIFIED
DIMENSIONS ARE IN INCHES
TOLERANCES ON
FRACTIONS ± — DECIMALS ± — ANGLES ± —

DO NOT SCALE THIS DRAWING

MATERIAL

CONTRACT

AC SPARK PLUG DIVISION, GMC
MILWAUKEE, WISCONSIN

ACSP PN

DRAWN T. KOSMOTKA DATE 7 NOV 63
CHECKED M. MANNING 12 NOV 63
APPROVAL R. B. LIGON 12 NOV 63
APPROVAL L. M. Watson 1-5-65
NASA APPROVAL 1/26/65
MIT APPROVAL 1/26/65

MANNED
SPACECRAFT CENTER
HOUSTON, TEXAS

CABLE INTERCONNECT W52
ISS, OSS, TESTING

CODE IDENT NO. | SIZE C | 1900979

SCALE NONE | SHEET 15 OF 15

MIL 1077C—P

GENERAL NOTES

NOTES

1 SEE CONDUCTOR CHART

2 SEE CONDUCTOR CHART

3 INTERPRET DRAWING IN ACCORDANCE WITH STANDARDS PRESCRIBED BY MIL-D-70327.

4 MARK CONDUCTOR IDENTIFICATION ON SINGLE CONDUCTORS PER ND1002019 OMITTING ALL SUFFIX LETTERS EXCEPT A AND B.

5 SPACING OF CONDUCTOR IDENTIFICATION SHALL BE EVERY 15 INCHES MAX AND AT EACH TERMINATION.

6 SPIRALLING OF THE MARKING IS ALLOWED.

7 IDENTIFY USING DRAWING NO. AND REVISION LETTER PER MIL-STD-130 (ES-267). .12 INCH HIGH CHARACTERS BLACK.

8 Y OR N IN TINNED COLUMN INDICATES YES OR NO.

9 A LETTER WITH AN ASTERISK SUFFIX, INDICATES A LOWER CASE LETTER.

10 VENDOR ITEM - SEE SPECIFICATION CONTROL DRAWING.

11 MARK IDENTIFICATION BAND WITH REFERENCE DESIGNATION AS NOTED .12 INCH HIGH COLOR BLACK, HOT IMPRESSION STAMPING PER ND1002019. CENTRALIZE.

MANNED SPACECRAFT CENTER HOUSTON, TEXAS	SIZE A	1900979	
SCALE - NONE	REV LTR +		SHEET 2 OF 13

MIL 2084 4-63

GENERAL NOTES

NOTES

12 MARK SLEEVING WITH REFERENCE DESIGNATIONS AS SHOWN .12 INCH HIGH, COLOR BLACK PER ND1002019.

13 MARK SLEEVING OF MULTI-CONDUCTORS WITH THE CONDUCTOR NUMBER .12 INCH HIGH, COLOR BLACK, PER ND1002019 WHEN SLEEVING ITEM NUMBERS FOLLOW AN A OR T IN THE ACCESSORIES ITEM NUMBER FIELD.

14 A OR T PREFIX IN THE ACCESSORIES ITEM NUMBER COLUMN INDICATES THE READING POSITION AWAY FROM TERMINATION OR TOWARD TERMINATION RESPECTIVELY, OF THE WIRE MARKER SLEEVE.

15 THE SUFFIX LETTER OF A CONDUCTOR IDENTIFICATION NUMBER INDICATES CONDUCTOR SHIELDING, COLOR, OR MARKING.

A - FROM END SHIELD
L - WHITE WITH BLUE TRACER
R - WHITE WITH RED TRACER
Y - WHITE WITH YELLOW TRACER
W - WHITE

16 ASSEMBLE CONTACTS IN ALL CONNECTOR GROMMET HOLES

17 SECURE TO CABLE USING ITEM 22. MARKING TO READ AWAY FROM CONNECTOR.

18 SEAL ZIPPER TUBING PER ND 1002153

19 SERIALIZE PER ND 1002023

MANNED SPACECRAFT CENTER HOUSTON, TEXAS	SIZE A	1900979	
SCALE - NONE	REV LTR +		SHEET 3 OF 13

MIL 2084 4-63

FOR INFORMATION ONLY

CLASS B RELEASE TDR No. 05563 DATE 1/7/69

APPLICATION		REVISIONS			
NEXT ASSY	USED ON	SYM	DESCRIPTION	DATE	APPROVAL
1900005-011	1900005-011		-		

REV	SHEET	REV STATUS	REV	SHEET	OF SHEETS	SHEET	1	2	3	4	5	6	7	8	9	10	11	12	13
			+	+	+	+	+	+	+	+	+	+	+	+	+	+	+	+	+

AC SPARK PLUG DIVISION, GMC
MILWAUKEE, WISCONSIN

ACSP PN

DRAWN T. Kennedy DATE 12 Nov 68
CHECKED R. B. Lyon 12 Nov 68
APPROVAL L. Redman 12 Nov 68
APPROVAL

MANNED SPACECRAFT CENTER HOUSTON, TEXAS

CABLE INTERCONNECT W52
16S, OSS, TESTING

REV

NASA APPROVAL
MIT APPROVAL

CODE IDENT NO. | SIZE A | 1900979

CONTRACT NAS 9-497 | SCALE - | SHEET 1 OF 13

GENERAL NOTES

TOLERANCE CHART, UNLESS OTHERWISE SPECIFIED ---

APPLICABLE LENGTH FOR WIRE OR CABLE, STRIP WIRE, STRIP JACKET, CUT WIRE OR CUT SHIELD	TOLERANCE				
	WIRE OR CABLE	STRIP WIRE	STRIP JACKET	CUT WIRE	CUT SHIELD
UNDER 1 INCH	+ .06-.00	+.03-.00	+.06-.06	+.06-.06	+.06-.06
1 INCH TO 6 INCHES	+ .50-.00	+.06-.00	+.25-.25	+.25-.25	+.25-.25
6 INCHES TO 6 FEET	+1.00-.00		+.50-.50	+.50-.50	+.50-.50
OVER 6 FEET	+2.00-.00				

MANNED SPACECRAFT CENTER HOUSTON, TEXAS	SIZE A	1900979	
SCALE - NONE	REV LTR +		SHEET 4 OF 13

MIL 2084 4-63

INCHES 0 1 2
PHOTOGRAPHIC SCALE ONLY

SEE NOTE	ITEM	REQ'D	PART NUMBER	DESCRIPTION
	1	1	1900979-001	WIRE ND 1002181 TYPE 2, CLASS 4, WHT JAKT, 22 AWG, WHT/BLU, WHT/RED, 208 FT. TOTAL LENGTH
	2	1	1900979-002	WIRE ND 1002181 TYPE 1, CLASS 4, WHT JAKT, 22 AWG, WHT, 32 FT. TOTAL LENGTH
	3	1	1900979-003	WIRE ND 1002181 TYPE 3, CLASS 4, WHT JAKT, 22 AWG, WHT/BLU, WHT/RED, WHT/YEL, 48 FT. TOTAL LENGTH.
	4	1	1900979-004	WIRE ND 1002181 TYPE 1, CLASS 1, 22 AWG, WHT, 36 FT. TOTAL LENGTH
16	5	1	MS3126F 24-61PY	(1897047-613) CONNECTOR PLUG
16	6	1	1010411-2	CONNECTOR PLUG
10	7	13	1000243-008	FERRULE ELECT COND
10	8	13	1000242-007	
10	9	3	1000243-011	
10	10	3	1000242-011	
10	11	2	1000243-003	
10	12	2	1000242-003	
10	13	16	1010490-194	INSULATION SLEEVING ELECT
10	14	16	1010490-196	
10	15	4	1010490-258	
10	16	2	1010490-198	
10	17	2	1010490-200	
10	18	4	1016006-002	SPLICE REDUCER

MANNED SPACECRAFT CENTER HOUSTON, TEXAS	SIZE A	1900979
SCALE - NONE	REV LTR +	SHEET 6 OF 13

MIL 2084 4-63

GIK CABLE W52 + 1900979

CONDUCTOR NUMBER	ITEM NO.		FROM CUT WIRE OR SHIELD STRIP WIRE OR JACKET CIRCUIT POINT		TIN		TERMINATION SPEC. ITEM NO.		NO.	TO CUT WIRE OR SHIELD STRIP WIRE OR JACKET CIRCUIT POINT		TIN		TERMINATION SPEC ITEM NO.		NO.
A 1	1			230		200	A 14	7A			230		200	7 8	5	
														A 13		
A 1A	4		SHLD A1	37N						E1	37N					
A 1L			P1-Z	22N						P2- 14	22N			23		
A 1R			P1-Y	22N						P2- 1	22N			23		
A 2	1			230		200	A 14	7A			230		200	7 8	5	
														A 13		
A 2A	4		SHLD A2	37N						E1	37N					
A 2L			P1-D*	22N						P2- 67	22N			23		
A 2R			P1-C*	22N						P2- 57	22N			23		
A 3	1			230		200	A 14	7A			230		200	7 8	5	
														A 13		
A 3A	4		SHLD A3	37N						E1	37N					
A 3L			P1-E*	22N						P2- 56	22N			23		
A 3R			P1-D*	22N						P2- 66	22N			23		
A 4	2			230		200	A 17	7A			230		200	11 12	5	
														A 16		
A 4A	4		SHLD A4	37N						E1	37N					

1 THE STD CONDUCTOR TERMINATION FIGURES ARE PER
2 DIMENSIONS ARE IN INCHES AND TWO PLACE DECIMALS.

MANNED SPACECRAFT CENTER HOUSTON, TEXAS	SIZE A	1900979
SCALE - NONE	REV LTR +	SHEET 7 OF 13

MIL 2085 - 4-63 WIR

LIST OF MATERIAL

SEE NOTE	ITEM	REQ'D	PART NUMBER	DESCRIPTION
10	19	1	1016128-011	BAND IDENTIFICATION
10	20	2	1016128-041	BAND IDENTIFICATION
	21	1	1900979-005	ZIPPER TUBING, ND 1002155, TYPE 1, PLASTIC, FLEXIBLE, 13/16 DIA. 16 FT TOTAL LENGTH
	22	AR	MIL-T-713	LACING TAPE, TYPE P, CLASS 2, BLACK (ES2732 NO. 18)
10	23	108	1010464-2	CONTACT SOCKET

MANNED SPACECRAFT CENTER HOUSTON, TEXAS	SIZE A	1900979
SCALE - NONE	REV LTR +	SHEET 5 OF 13

MIL 2084 4-63

GIK CABLE W52 + 1900979

CONDUCTOR NUMBER	ITEM NO.		FROM CUT WIRE OR SHIELD STRIP WIRE OR JACKET CIRCUIT POINT		TIN		TERMINATION SPEC. ITEM NO.		NO.	TO CUT WIRE OR SHIELD STRIP WIRE OR JACKET CIRCUIT POINT		TIN		TERMINATION SPEC ITEM NO.		NO.
A 4W			P1-F*	22N						P2- 34	22N			23		
A 5	1			280		250	A 14	7A			280		250	7 8	5	
														A 13		
A 5A	4		SHLD A5	37N						E1	37N					
A 5L			P1-H*	22N						P2- 45	22N			23		
A 5R			P1-G*	22N						P2- 35	22N			23		
A 6	1			280		250	A 14	7A			280		250	7 8	5	
														A 13		
A 6A	4		SHLD A6	37N						E1	37N					
A 6L			P1-J*	22N						P2- 20	22N			23		
A 6R			P1-I*	22N						P2- 6	22N			23		
A 7	1			280		250	A 14	7A			280		250	7 8	5	
														A 13		
A 7A	4		SHLD A7	37N						E2	37N					
A 7L			P1-M*	22N						P2- 21	22N			23		
A 7R			P1-K*	22N						P2- 7	22N			23		
A 8	1			280		250	A 14	7A			280		250	7 8	5	
														A 13		

1 THE STD CONDUCTOR TERMINATION FIGURES ARE PER
2 DIMENSIONS ARE IN INCHES AND TWO PLACE DECIMALS.

MANNED SPACECRAFT CENTER HOUSTON, TEXAS	SIZE A	1900979
SCALE - NONE	REV LTR +	SHEET 8 OF 13

MIL 2085 - 4-63 WIR

INCHES 0 1 2 PHOTOGRAPHIC SCALE ONLY

GIK CABLE W52 + 1900979

CONDUCTOR NUMBER	INDIVIDUAL LENGTH ITEM NO. (2)	FROM: CUT WIRE OR SHIELD STRIP WIRE OR JACKET CIRCUIT POINT (2)	TIN (2)	TERMINATION SPEC. (1) ITEM NO.	NO.	TO: CUT WIRE OR SHIELD STRIP WIRE OR JACKET CIRCUIT POINT (2)	TIN (2)	TERMINATION SPEC (1) ITEM NO.	NO.
								A 13	
A 12A	4	SHLD A12	37N			E2	37N		
A 12L		P1-W*	22N			P2-108	22N	23	
A 12R		P1-V*	22N			P2-107	22N	23	
A 12Y		P1-X*	22N			P2- 94	22N	23	
A 13	1		380	350 A 14	7A		380	350 7 8	5
								A 13	
A 13A	4	SHLD A13	37N			E3	37N		
A 13L		P1-Z*	22N			P2- 60	22N	23	
A 13R		P1-Y*	22N			P2- 50	22N	23	
A 14	1		380	350 A 14	7A		380	350 7 8	5
								A 13	
A 14A	4	SHLD A14	37N			E3	37N		
A 14L		P1-CC	22N			P2- 2	22N	23	
A 14R		P1-BB	22N			P2- 3	22N	23	
A 15	1		380	350 A 14	7A		380	350 7 8	5
								A 13	
A 15A	4	SHLD A15	37N			E3	37N		

(1) THE STD CONDUCTOR TERMINATION FIGURES ARE PER
(2) DIMENSIONS ARE IN INCHES AND TWO PLACE DECIMALS.

MANNED SPACECRAFT CENTER HOUSTON, TEXAS | SIZE A | 1900979
SCALE - NONE | REV LTR + | SHEET 10 OF 13

MIL 2085 - 4-63 WIR

GIK CABLE W52 + 1900979

CONDUCTOR NUMBER	INDIVIDUAL LENGTH ITEM NO. (2)	FROM: CUT WIRE OR SHIELD STRIP WIRE OR JACKET CIRCUIT POINT (2)	TIN (2)	TERMINATION SPEC. (1) ITEM NO.	NO.	TO: CUT WIRE OR SHIELD STRIP WIRE OR JACKET CIRCUIT POINT (2)	TIN (2)	TERMINATION SPEC (1) ITEM NO.	NO.
A 15L		P1-FF	22N			P2- 92	22N	23	
A 15R		P1-EE	22N			P2-106	22N	23	
A 16	3		380	350 A 14	7A		380	350 9 10	5
								A 13	
A 16A	4	SHLD A16	37N			E3	37N		
A 16L		P1-HH	22N			P2- 31	22N	23	
A 16R		P1-GG	22N			P2- 32	22N	23	
A 16Y		P1-JJ	22N			P2- 43	22N	23	
A 17	1		430	400 A 14	7A		430	400 7 8	5
								A 13	
A 17A	4	SHLD A17	37N			E3	37N		
A 17L		P1-LL	22N			P2- 29	22N	23	
A 17R		P1-KK	22N			P2- 28	22N	23	
A 18	4	P1-A	22N			P2- 41	22N	23	
A 19	3		430	400 A 14	7A		430	400 9 10	5
								A 13	
A 19A	4	SHLD A19	37N			E3	37N		
A 19L		P1-MM	22N			P2- 11	22N	23	

(1) THE STD CONDUCTOR TERMINATION FIGURES ARE PER
(2) DIMENSIONS ARE IN INCHES AND TWO PLACE DECIMALS.

MANNED SPACECRAFT CENTER HOUSTON, TEXAS | SIZE A | 1900979
SCALE - NONE | REV LTR + | SHEET 11 OF 13

MIL 2085 - 4-63 WIR

GIK CABLE W52 + 1900979

CONDUCTOR NUMBER	INDIVIDUAL LENGTH ITEM NO. (2)	FROM: CUT WIRE OR SHIELD STRIP WIRE OR JACKET CIRCUIT POINT (2)	TIN (2)	TERMINATION SPEC. (1) ITEM NO.	NO.	TO: CUT WIRE OR SHIELD STRIP WIRE OR JACKET CIRCUIT POINT (2)	TIN (2)	TERMINATION SPEC (1) ITEM NO.	NO.
A 8A	4	SHLD A8	37N			E2	37N		
A 8L		P1-P*	22N			P2- 90	22N	23	
A 8R		P1-N*	22N			P2-104	22N	23	
A 9	2		330	300 A 17	7A		330	300 11 12	5
								A 16	
A 9A	4	SHLD A9	37N			E2	37N		
A 9W		P1-Q*	22N			P2- 89	22N	23	
A 10	1		330	300 A 14	7A		330	300 7 8	5
								A 13	
A 10A	4	SHLD A10	37N			E2	37N		
A 10L		P1-S*	22N			P2- 86	22N	23	
A 10R		P1-R*	22N			P2-100	22N	23	
A 11	1		330	300 A 14	7A		330	300 7 8	5
								A 13	
A 11A	4	SHLD A11	37N			E2	37N		
A 11L		P1-U*	22N			P2- 87	22N	23	
A 11R		P1-T*	22N			P2-101	22N	23	
A 12	3		330	300 A 14	7A		330	300 9 10	5

(1) THE STD CONDUCTOR TERMINATION FIGURES ARE PER
(2) DIMENSIONS ARE IN INCHES AND TWO PLACE DECIMALS.

MANNED SPACECRAFT CENTER HOUSTON, TEXAS | SIZE A | 1900979
SCALE - NONE | REV LTR + | SHEET 9 OF 13

MIL 2085 - 4-63 WIR

GIK CABLE W52 + 1900979

CONDUCTOR NUMBER	INDIVIDUAL LENGTH ITEM NO. (2)	FROM: CUT WIRE OR SHIELD STRIP WIRE OR JACKET CIRCUIT POINT (2)	TIN (2)	TERMINATION SPEC. (1) ITEM NO.	NO.	TO: CUT WIRE OR SHIELD STRIP WIRE OR JACKET CIRCUIT POINT (2)	TIN (2)	TERMINATION SPEC (1) ITEM NO.	NO.
A 19R		P1-NN	22N			P2- 25	22N	23	
A 19Y		P1-PP	22N			P2- 12	22N	23	
A 20	4	P1-B	22N			E1	37N		
A 21	4	E2	37N			E1	37N		
A 22	4	E3	37N			E2	37N		
A 23	4	E4	37N			E3	37N		

(1) THE STD CONDUCTOR TERMINATION FIGURES ARE PER
(2) DIMENSIONS ARE IN INCHES AND TWO PLACE DECIMALS.

MANNED SPACECRAFT CENTER HOUSTON, TEXAS | SIZE A | 1900979
SCALE - NONE | REV LTR + | SHEET 12 OF 13

MIL 2085 - 4-63 WIR

INCHES 0 1 2 PHOTOGRAPHIC SCALE ONLY

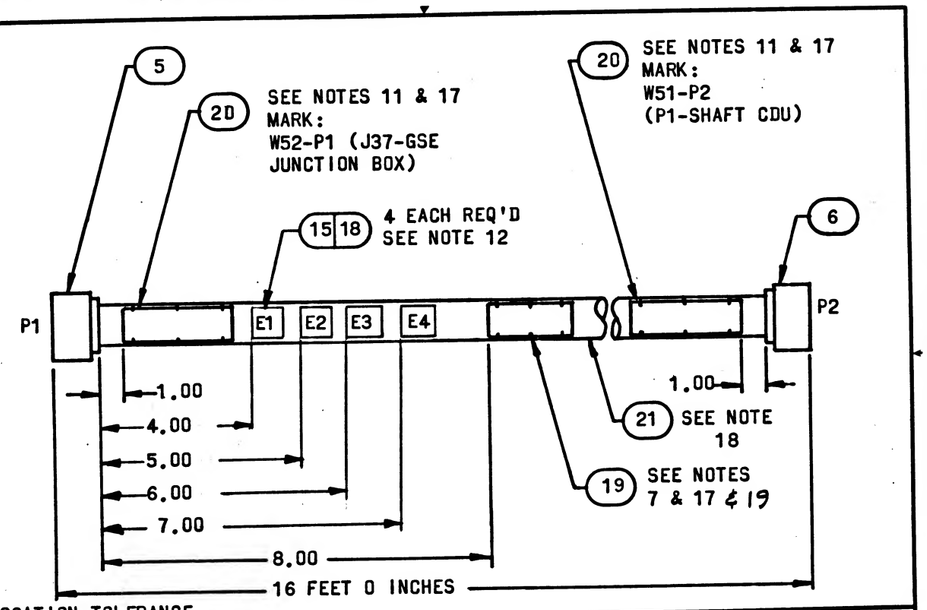

PHOTOGRAPHIC SCALE ONLY
INCHES
0
2

APPLICATION		REVISIONS			
NEXT ASSY	USED ON	SYM	DESCRIPTION	DATE	APPROVAL
1901308	1900005-011	A	CHANGE IN ACCORDANCE WITH CM-193765	17 FEB 64	J.B.
		B	CHANGE IN ACCORDANCE WITH CM-195637	17 MAR 64	

FOR INFORMATION ONLY

CLASS B RELEASE TDR No. 05663 DATE 4/7/64

REV																				
SHEET																				
REV STATUS	REV	B	A	A	A	A	A	A	A	B	A	A	A	A						
OF SHEETS	SHEET	1	2	3	4	5	6	7	8	9	10	11	12	13						

AC SPARK PLUG DIVISION, GMC
MILWAUKEE, WISCONSIN

ACSP PN

DRAWN DATE 5 NOV 63
CHECKED 11 NOV 63
APPROVAL 12 NOV 63
APPROVAL 13/64

MANNED SPACECRAFT CENTER
HOUSTON, TEXAS

CABLE INTERCONNECT W53
ISS, OSS, TESTING

NASA APPROVAL
MIT APPROVAL

CODE IDENT NO. | SIZE A | 1900980 | REV B

CONTRACT NAS9-497 | SCALE NONE | SHEET 1 OF 13

GII CABLE W53 A 1900980

PERMANENT NOTE

GENERAL NOTES

1. A OR T PREFIX IN THE ACCESSORIES ITEM NUMBER COLUMN INDICATES THE REQUIRED POSITIONING OF THE TERMINATION OR TERMINATION RESPECTIVELY, OF THE WIRE MARKER SLEEVE.
2. THE SUFFIX LETTER OF A CONDUCTOR IDENTIFICATION NUMBER INDICATES CONDUCTOR SHIELDING COLORS OR MARKING.
   - A - FROM END SHIELD
   - L - WHITE WITH BLUE TRACER
   - M - WHITE WITH RED TRACER
   - Y - WHITE WITH YELLOW TRACER
3. ASSEMBLE CONTACTS IN ALL CONNECTOR INSERT HOLES.
4. SECURE TO CABLE USING ITEM 21. MARKING TO READ AWAY FROM CONNECTOR.
5. SEAL ZIPPER TUBING PER NO1002153
6. SERIALIZE PER NO1002023
7. ITEM 24 SHALL BE SHORTENED WHEN NECESSARY TO AVOID INTERFERENCE WITH FERRULES AND MAY BE COIL LENGTHWISE ON ONE SIDE. SELECT ONE OR MORE OF ITEM 24 AS REQUIRED TO FIT.
8. ITEM 23 FURNISHED WITH ITEM 9.

MANNED SPACECRAFT CENTER HOUSTON, TEXAS | SIZE A | 1900980 | SCALE-NONE | REV LTR A | SHEET 3 OF 13

GII CABLE W53 A 1900980

PERMANENT NOTE

GENERAL NOTES

1. SEE CONDUCTOR CHART. PERMANT NOTE 2.
2. SEE CONDUCTOR CHART. PERMANT NOTE 1.
3. INTERMAT OPENING IN ACCORDANCE WITH STANDARD PRESCRIBED BY MIL-D-73327.
4. MARK CONDUCTOR IDENTIFICATION ON SINGLE CONDUCTORS PER NO1002019 OMITTING ALL SUFFIX LETTERS EXCEPT A AND F.
5. SPACING OF CONDUCTOR IDENTIFICATION SHALL BE EVERY 15 INCHES MAX AND AT EACH TERMINATION.
6. SPIRALING OF THE MARKING IS ALLOWED.
7. IDENTIFY USING DRAWING NO. AND REVISION LETTER PER MIL-STD-194 (ES-2671. .12 INCH HIGH CHARACTERS BLACK.
8. Y OR N IN TINNED COLUMN INDICATES YES OR NO.
9. A LETTER WITH AN ASTERISK SUFFIX, INDICATES A LOWER CASE LETTER.
10. VENDOR ITEM - SEE SPECIFICATION CONTROL DRAWING.
11. MARK IDENTIFICATION BAND WITH REFERENCE DESIGNATION AS NOTED .12 INCH HIGH COLOR BLACK, NOT IMPRESSION STAMPING PER NO1002019.
12. CENTRALIZE.
13. MARK SLEEVING WITH REFERENCE DESIGNATIONS AS SHOWN .12 INCH HIGH COLOR BLACK PER NO1002019.
    MARKING OF MULTI-CONDUCTORS WITH THE CONDUCTOR NUMBER .12 INCH HIGH COLOR BLACK PER NO1002019 ITEM SLEEVING ITEM NUMBERS FOLLOW AN A OR T IN THE ACCESSORIES ITEM NUMBER FIELD.

MANNED SPACECRAFT CENTER HOUSTON, TEXAS | SIZE A | 1900980 | SCALE-NONE | REV LTR A | SHEET 2 OF 13

GII CABLE W53 A 1900980

PERMANENT NOTE

GENERAL NOTES

TOLERANCE CHART, UNLESS OTHERWISE SPECIFIED ---

APPLICABLE LENGTH FOR WIRE OR CABLE, STRIP WIRE, STRIP JACKET, CUT WIRE OR CUT SHIELD	TOLERANCE WIRE OR CABLE	TOLERANCE STRIP WIRE	TOLERANCE JACKET	TOLERANCE CUT WIRE	TOLERANCE CUT SHIELD
UNDER 1 INCH	+.00-.00	+.03-.00	+.08-.08	+.06-.06	+.06-.06
1 INCH TO 6 INCHES	+.50-.00	+.50-.00	+.25-.25	+.25-.25	+.25-.25
6 INCHES TO 6 FEET	+1.00-.00		+.50-.50	+.50-.50	+.50-.50
OVER 6 FEET	+2.00-.00				

MANNED SPACECRAFT CENTER HOUSTON, TEXAS | SIZE A | 1900980 | SCALE-NONE | REV LTR A | SHEET 4 OF 13

PERMANENT LIST OF MATERIALS

NOTE	ITEM	QTY	PART NO	DESCRIPTION
	1	1	1900980-001	WIRE ND1002181 TYPE 3, CLASS 4, WHITE JACKET 22AWG WHT/RED, WHT/BLU, WHT/YEL 48 FT TOT. LG
	2	1	1900980-002	WIRE ND1002181 TYPE 2, CLASS 4, WHT JACKET 22AWG WHT/RED, WHT/BLU 176 FT TOTAL LENGTH
	3	1	1900980-003	WIRE ND1002181 TYPE 1, CLASS 4, WHT JACKET 22AWG WHT 64 FT TOTAL LENGTH
	4	1	1900980-004	WIRE ND1002181 TYPE 1, CLASS 1, 22AWG WHT 75 FT TOTAL LENGTH
	5	1	MS3126F24-61PW	(1897047-611) CONNECTOR, PLUG
10	6	1	1010411-002	CONNECTOR, PLUG
10	7	4	1000243-003	FERRULE, ELEC COND
10	8	4	1000242-002	FERRULE, ELEC COND
10	9	11	1000243-008	FERRULE, ELEC COND
10	10	11	1000242-007	FERRULE, ELEC COND
10	11	3	1000243-011	FERRULE, ELEC COND
10	12	3	1000242-011	FERRULE, ELEC COND
10	13	26	1010490-198	INSULATION, SLEEVING ELEC
10	14	6	1010490-196	INSULATION, SLEEVING ELEC
10	15	4	1010490-200	INSULATION, SLEEVING ELEC
10	16	3	1010490-258	INSULATION, SLEEVING ELEC

MANNED SPACECRAFT CENTER HOUSTON, TEXAS | SIZE A | 1900980
SCALE-NONE | REV LTR A | SHEET 5 OF 13

PERMANENT LIST OF MATERIALS

NOTE	ITEM	QTY	PART NO	DESCRIPTION
10	17	2	1016128-041	BAND IDENTIFICATION
10	18	4	1016128-011	BAND IDENTIFICATION
10	19	3	1016006-002	SPLICE REDUCER
	20	1	1900980-005	ZIPPER TUBING ND1002155 TYPE 1, PLASTIC FLEXIBLE 1 IN. DIA 16 FT TOTAL LENGTH
	21	AR	MIL-T-713	LACING TAPE, TYPE P, CLASS 2, BLACK (FS-2732 NO. 181)
10	22	106	1010464-002	CONTACT, SOCKET
20	23			CONTACT PIN
21	24	AR	1897147-104,-106,-108,-112,-116,	CABLE CLAMP SLEEVE
	25	1	1016262-024	RUBBER GROMMET

MANNED SPACECRAFT CENTER HOUSTON, TEXAS | SIZE A | 1900980
SCALE-NONE | REV LTR A | SHEET 6 OF 13

CONDUCTOR INDIVIDUAL LENGTH NUMBER	ITEM NO.	2>	FROM CUT WIRE OR SHIELD STRIP WIRE OR JACKET CIRCUIT POINT	2>	T 1>	B 2>	TERMINATION SPEC. 1> ITEM NO.	NO.	TO CUT WIRE OR SHIELD STRIP WIRE OR JACKET CIRCUIT POINT	2>	T 1>	B 2>	TERMINATION SPEC. 1> ITEM NO.	NO.
A 1	4		P1-A*	19N		23			P2- 30	10N				
A 2	3			23U	20U	7	8	5		23U	20U	A 15	7A	
						A 13								
A 2A	4		SHLD A2	25N					E1	25N				
A 2W			P1-B*	19N		23			P2- 12	10N		22		
A 3	2			28U	25U	9	10	5		28U	20U	A 13	7A	
						A 13								
A 3A	4		SHLD A3	25N					E1	25N				
A 3L			P1-D*	19N		23			P2- 14	10N		22		
A 3R			P1-C*	19N		23			P2- 1	10N		22		
A 4	2			28U	20U	9	10	5		23U	25U	A 13	7A	
						A 13								
A 4A	4		SHLD A4	25N					E1	25N				
A 4L			P1-F*	19N		23			P2- 57	10N		22		
A 4R			P1-E*	19N		23			P2- 67	10N		22		
A 5	2			23U	20U	9	10	5		23U	20U	A 13	7A	
						A 13								
A 5A	4		SHLD A5	25N					E1	25N				

1> THE STD CONDUCTOR TERMINATION FIGURES ARE PER
2> DIMENSIONS ARE IN INCHES AND TWO PLACE DECIMALS.

MANNED SPACECRAFT CENTER HOUSTON, TEXAS | SIZE A | 1900980
SCALE-NONE | REV LTR A | SHEET 7 OF 13

CONDUCTOR INDIVIDUAL LENGTH NUMBER	ITEM NO.	2>	FROM CUT WIRE OR SHIELD STRIP WIRE OR JACKET CIRCUIT POINT	2>	T 1>	B 2>	TERMINATION SPEC. 1> ITEM NO.	NO.	TO CUT WIRE OR SHIELD STRIP WIRE OR JACKET CIRCUIT POINT	2>	T 1>	B 2>	TERMINATION SPEC. 1> ITEM NO.	NO.
A 5L			P1-H*	19N		23			P2- 45	10N		22		
A 5R			P1-G*	19N		23			P2- 35	10N		22		
A 6	3			28U	25U	7	8	5		28U	25U	A 15	7A	
						A 13								
A 6A	4		SHLD A6	25N					E1	25N				
A 6W			P1-I*	19N		23			P2- 34	10N		22		
A 7	2			28U	25U	9	10	5		28U	25U	A 13	7A	
						A 13								
A 7A	4		SHLD A7	25N					E1	25N				
A 7L			P1-K*	19N		23			P2- 6	10N		22		
A 7R			P1-J*	19N		23			P2- 20	10N		22		
A 8	2			28U	25U	9	10	5		28U	25U	A 13	7A	
						A 13								
A 8A	4		SHLD A8	25N					E2	25N				
A 8L			P1-N*	19N		23			P2- 7	10N		22		
A 8R			P1-M*	19N		23			P2- 21	10N		22		
A 9	2			28U	25U	9	10	5		28U	25U			
						A 13								

1> THE STD CONDUCTOR TERMINATION FIGURES ARE PER
2> DIMENSIONS ARE IN INCHES AND TWO PLACE DECIMALS.

MANNED SPACECRAFT CENTER HOUSTON, TEXAS | SIZE A | 1900980
SCALE-NONE | REV LTR A | SHEET 8 OF 13

CONDUCTOR INDIVIDUAL LENGTH NUMBER	ITEM NO. (2)	FROM CUT WIRE OR SHIELD STRIP WIRE OR JACKET CIRCUIT POINT	(2)	(1)	(3)	TERMINATION SPEC (1)	ITEM NO.	NO.	TO CUT WIRE OR SHIELD STRIP WIRE OR JACKET CIRCUIT POINT	(2)	(1)	(3)	TERMINATION SPEC (1)	ITEM NO.	NO.
A 9A	4	SHLD A9	25N						E2	25N					
A 9L		P1-Q*	19N		23				P2- 90	10N		22			
A 9R		P1-P*	19N		23				P2-104	10N		22			
A 10	2		33U	30U	9	10	5			33U	30U	A 13		7A	
					A 13										
A 10A	4	SHLD A10	25N						E2	25N					
A 10L		P1-S*	19N		23				P2- 86	10N		22			
A 10R		P1-R*	19N		23				P2-100	10N		22			
A 11	2		33U	30U	9	10	5			33U	30U	A 13		7A	
					A 13										
A 11A	4	SHLD A11	25N						E2	25N					
A 11L		P1-U*	19N		23				P2- 87	10N		22			
A 11R		P1-T*	19N		23				P2-101	10N		22			
A 12	1		33U	30U	11	12	5			33U	30U	A 14		7A	
					A 14										
A 12A	4	SHLD A12	25N						P1-C	19N					
A 12L		P1-W*	19N		23				P2-108	10N		22			
A 12R		P1-V*	19N		23				P2-107	10N		22			

(1) THE STD CONDUCTOR TERMINATION FIGURES ARE PER
(2) DIMENSIONS ARE IN INCHES AND TWO PLACE DECIMALS.

MANNED SPACECRAFT CENTER HOUSTON, TEXAS | SIZE A | 1900980
SCALE - NONE | REV LTR B | SHEET 9 OF 13

CONDUCTOR INDIVIDUAL LENGTH NUMBER	ITEM NO. (2)	FROM CUT WIRE OR SHIELD STRIP WIRE OR JACKET CIRCUIT POINT	(2)	(1)	(3)	TERMINATION SPEC (1)	ITEM NO.	NO.	TO CUT WIRE OR SHIELD STRIP WIRE OR JACKET CIRCUIT POINT	(2)	(1)	(3)	TERMINATION SPEC (1)	ITEM NO.	NO.
A 12Y		P1-X*	19N		23				P2- 94	10N		22			
A 13	2		33U	30U	9	10	5			33U	30U	A 13		7A	
					A 13										
A 13A	4	SHLD A13	25N						E2	25N					
A 13L		P1-Z*	19N		23				P2- 50	10N		22			
A 13R		P1-Y*	19N		23				P2- 60	10N		22			
A 14	4	P1-AA	19N		23				P2- 16	10N		22			
A 15	2		38U	35U	9	10	5			38U	35U	A 13		7A	
					A 13										
A 15A	4	SHLD A15	25N						E3	25N					
A 15L		P1-CC	19N		23				P2- 2	10N					
A 15R		P1-BB	19N		23				P2- 3	10N					
A 16	1		38U	35U	11	12	5			38U	35U	A 14		7A	
					A 14										
A 16A	4	SHLD A16	25N						E3	25N					
A 16L		P1-FF	19N		23				P2-105	10N		22			
A 16R		P1-EE	19N		23				P2- 92	10N		22			
A 16Y		P1-GG	19N		23				P2-106	10N		22			

(1) THE STD CONDUCTOR TERMINATION FIGURES ARE PER
(2) DIMENSIONS ARE IN INCHES AND TWO PLACE DECIMALS.

MANNED SPACECRAFT CENTER HOUSTON, TEXAS | SIZE A | 1900980
SCALE - NONE | REV LTR A | SHEET 10 OF 13

CONDUCTOR INDIVIDUAL LENGTH NUMBER	ITEM NO. (2)	FROM CUT WIRE OR SHIELD STRIP WIRE OR JACKET CIRCUIT POINT	(2)	(1)	(3)	TERMINATION SPEC (1)	ITEM NO.	NO.	TO CUT WIRE OR SHIELD STRIP WIRE OR JACKET CIRCUIT POINT	(2)	(1)	(3)	TERMINATION SPEC (1)	ITEM NO.	NO.
A 17	1		38U	35U	11	12	5			38U	35U	A 14		7A	
					A 14										
A 17A	4	SHLD A17	25N						E3	25N					
A 17L		P1-JJ	19N		23				P2- 31	10N		22			
A 17R		P1-HH	19N		23				P2- 32	10N		22			
A 17Y		P1-KK	19N		23				P2- 43	10N		22			
A 18	2		38U	35U	9	10	5			38U	35U	A 13		7A	
					A 13										
A 18A	4	SHLD A18	25N						E3	25N					
A 18L		P1-MM	19N		23				P2- 29	10N		22			
A 18R		P1-LL	19N		23				P2- 28	10N		22			
A 19	4	P1-A	19N		23				P2- 41	10N		22			
A 19L		P1-NN	19N		23				P2- 29	10N		22			
A 20	3		43U	40U	7	8	5			43U	40U	A 15		7A	
					A 15										
A 20A	4	SHLD A20	25N						E3	25N					
A 20W		P1-NN	19N		23				P2- 11	10N		22			
A 21	3		43U	40U	7	8	5			43U	40U	A 15		7A	

(1) THE STD CONDUCTOR TERMINATION FIGURES ARE PER
(2) DIMENSIONS ARE IN INCHES AND TWO PLACE DECIMALS.

MANNED SPACECRAFT CENTER HOUSTON, TEXAS | SIZE A | 1900980
SCALE - NONE | REV LTR A | SHEET 11 OF 13

CONDUCTOR INDIVIDUAL LENGTH NUMBER	ITEM NO. (2)	FROM CUT WIRE OR SHIELD STRIP WIRE OR JACKET CIRCUIT POINT	(2)	(1)	(3)	TERMINATION SPEC (1)	ITEM NO.	NO.	TO CUT WIRE OR SHIELD STRIP WIRE OR JACKET CIRCUIT POINT	(2)	(1)	(3)	TERMINATION SPEC (1)	ITEM NO.	NO.
						A 13									
A 21A	4	SHLD A21	25N						E3	25N					
A 21W		P1-PP	19N		23				P2- 25	10N		22			
A 22	4	P1-H	19N		23				E1	25N					
A 23	4	E2	25N						E1	25N					
A 24	4	E3	25N						E2	25N					
A 25	4	P1-DD	19N		23				P2- 15	10N		22			

(1) THE STD CONDUCTOR TERMINATION FIGURES ARE PER
(2) DIMENSIONS ARE IN INCHES AND TWO PLACE DECIMALS.

MANNED SPACECRAFT CENTER HOUSTON, TEXAS | SIZE A | 1900980
SCALE - NONE | REV LTR A | SHEET 12 OF 13

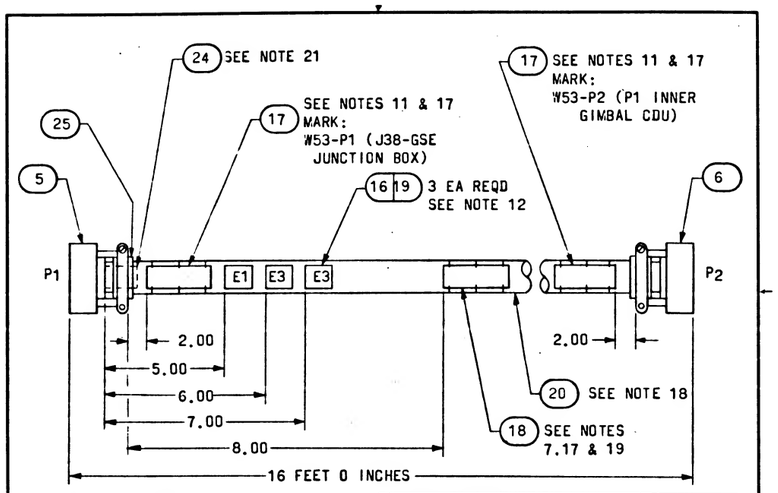

LOCATION TOLERANCE
(EXCEPT LENGTH):
+.50
-.50

MANNED SPACECRAFT CENTER HOUSTON, TEXAS	SIZE A	1900980
SCALE NONE	REV LTR A >	SHEET 13 of 13

PENNANT NOTE	GENERAL NOTES
1	SEE CONDUCTOR CHART, PENNANT NOTE 1.
2	SEE CONDUCTOR CHART, PENNANT NOTE 2.
3	INTERPRET DRAWING IN ACCORDANCE WITH STANDARDS PRESCRIBED BY MIL-D-70327.
4	MARK CONDUCTOR IDENTIFICATION ON SINGLE CONDUCTORS PER ND1002019 OMITTING ALL SUFFIX LETTERS EXCEPT A AND B.
5	SPACING OF CONDUCTOR IDENTIFICATION SHALL BE EVERY 15 INCHES MAX. AND AT EACH TERMINATION.
6	SPIRALLING OF THE MARKING IS ALLOWED.
7	IDENTIFY USING DRAWING NO. AND REVISION LETTER PER MIL-STD-130 (ES-267). .12 INCH HIGH CHARACTERS BLACK.
8	Y OR N IN TINNED COLUMN INDICATES YES OR NO.
9	A LETTER WITH AN ASTERISK SUFFIX, INDICATES A LOWER CASE LETTER.
10	VENDOR ITEM - SEE SPECIFICATION CONTROL DRAWING.
11	MARK IDENTIFICATION BAND WITH REFERENCE DESIGNATION AS NOTED .12 INCH HIGH COLOR BLACK, HOT IMPRESSION STAMPING PER ND1002019. CENTRALIZE.
12	MARK SLEEVING WITH REFERENCE DESIGNATIONS AS SHOWN .12 INCH HIGH, COLOR BLACK PER ND1002019.
13	MARK SLEEVING OF MULTI-CONDUCTORS WITH THE CONDUCTOR NUMBER .12 INCH HIGH, COLOR BLACK, PER ND1002019 WHEN SLEEVING ITEM NUMBERS FOLLOW AN A OR T IN THE ACCESSORIES ITEM NUMBER FIELD.

PENNANT NOTE	GENERAL NOTES
14	A OR T PREFIX IN THE ACCESSORIES ITEM NUMBER COLUMN INDICATES THE READING POSITION AWAY FROM TERMINATION OR TOWARD TERMINATION RESPECTIVELY, OF THE WIRE MARKER SLEEVE.
15	THE SUFFIX LETTER OF A CONDUCTOR IDENTIFICATION NUMBER INDICATES CONDUCTOR SHIELDING, COLOR, OR MARKING. A - FROM END SHIELD L - WHITE WITH BLUE TRACER R - WHITE WITH RED TRACER W - WHITE Y - WHITE WITH YELLOW TRACER
16	ASSEMBLE CONTACTS IN ALL CONNECTOR GROMMET HOLES.
17	SECURE TO CABLE USING ITEM 21, MARKING TO READ AWAY FROM CONNECTOR.
18	SEAL ZIPPER TUBING PER ND1002153
19	SERIALIZE PER ND1002023
20	ITEM 23 FURNISHED WITH ITEM 5.
21	ITEM 24 SHALL BE SHORTENED WHEN NECESSARY TO AVOID INTERFERENCE WITH FERRULES AND MAY BE CUT LENGTHWISE ON ONE SIDE. SELECT ONE OR MORE OF ITEM 24 AS REQUIRED TO FIT.
22	SEE NOTE 10 AND 16

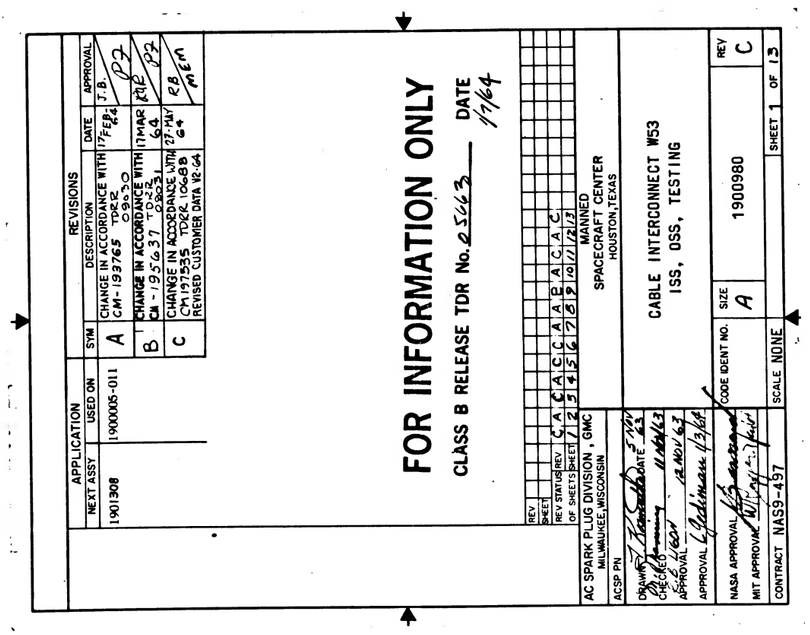

PENNANT NOTE — GENERAL NOTES

TOLERANCE CHART, UNLESS OTHERWISE SPECIFIED ---

APPLICABLE LENGTH FOR WIRE OR CABLE, STRIP WIRE, STRIP JACKET, CUT WIRE OR CUT SHIELD.	TOLERANCE: WIRE OR CABLE	STRIP: WIRE	STRIP: JACKET	CUT: WIRE	CUT: SHIELD
UNDER 1 INCH	+ .06-.00	+.03-.00	+.06-.06	+.06-.06	+.06-.06
1 INCH TO 6 INCHES	+ .50-.00	+.06-.00	+.25-.25	+.25-.25	+.25-.25
6 INCHES TO 6 FEET	+1.00-.00		+.50-.50	+.50-.50	+.50-.50
OVER 6 FEET	+2.00-.00				

PENNANT LIST OF MATERIALS

NOTE	ITEM	QTY	PART NO	DESCRIPTION
	1	1	1900980-001	WIRE ND1002181 TYPE 3, CLASS 4, WHITE JACKET 22AWG WHT/RED, WHT/BLU, WHT/YEL 48 FT TOT. LG
	2	1	1900980-002	WIRE ND1002181 TYPE 2, CLASS 4, WHT JACKET 22AWG WHT/RED, WHT/BLU 176 FT TOTAL LENGTH
	3	1	1900980-003	WIRE ND1002181 TYPE 1, CLASS 4, WHT JACKET 22AWG WHT 64 FT TOTAL LENGTH
	4	1	1900980-004	WIRE ND1002181 TYPE 1, CLASS 1, 22AWG WHT 75 FT TOTAL LENGTH
	5	1	MS3126F24-61PW (1897047-611)	CONNECTOR, PLUG
22	6	1	1010411-002	CONNECTOR, PLUG
10	7	4	1000243-003	FERRULE, ELEC COND
10	8	4	1000242-002	FERRULE, ELEC COND
10	9	11	1000243-008	FERRULE, ELEC COND
10	10	11	1000242-007	FERRULE, ELEC COND
10	11	3	1000243-011	FERRULE, ELEC COND
10	12	3	1000242-011	FERRULE, ELEC COND
10	13	26	1010490-198	INSULATION, SLEEVING ELEC
10	14	6	1010490-196	INSULATION, SLEEVING ELEC
10	15	4	1010490-200	INSULATION, SLEEVING ELEC
10	16	3	1010490-258	INSULATION, SLEEVING ELEC

MANNED SPACECRAFT CENTER HOUSTON, TEXAS | SIZE A | 1900980
SCALE - NONE | REV LTR C | SHEET 5 OF 13

MIL-5045 4-63

PENNANT LIST OF MATERIALS

NOTE	ITEM	QTY	PART NO	DESCRIPTION
10	17	2	1016128-041	BAND IDENTIFICATION
10	18	1	1016128-011	BAND IDENTIFICATION
10	19	3	1016006-002	SPLICE REDUCER
	20	1	1900980-005	ZIPPER TUBING ND1002155 TYPE 1, PLASTIC FLEXIBLE 1 IN. DIA 16 FT TOTAL LENGTH
	21	AR	MIL-T-713	LACING TAPE, TYPE P, CLASS 2, BLACK (ES-2732 NO. 18)
10	22	108	1010464-002	CONTACT, SOCKET
20	23			CONTACT PIN
21	24	AR	1897147-104,-106,-108,-112,-116,	CABLE CLAMP SLEEVE
	25	1	1016282-024	RUBBER GROMMET
10	26	1	1015902- 46	TERMINAL LUG
	27	1	1900980-006	TUBING, MODIFIED POLYVINYL CHLORIDE, FLEXIBLE, SHRINK-FIT PER 1016197-006 6 INCH TOTAL LENGTH

MANNED SPACECRAFT CENTER HOUSTON, TEXAS | SIZE A | 1900980
SCALE - NONE | REV LTR C | SHEET 6 OF 13

MIL-5045 4-63

CONDUCTOR NUMBER	ITEM NO.	2	FROM CUT WIRE OR SHIELD STRIP WIRE OR JACKET CIRCUIT POINT	3	TYPE	2	TERMINATION SPEC. 1 ITEM NO.				NO.	TO CUT WIRE OR SHIELD STRIP WIRE OR JACKET CIRCUIT POINT	3	TYPE	2	TERMINATION SPEC 1 ITEM NO.				NO.
A 1	4		P1-A*	19N			23					P2- 30	10N							
A 2	3			23O		20O	7	8		5			23O		20O	A 15		7A		
							A 13													
A 2A	4		SHLD A2	25N								E1	25N							
A 2W			P1-B*	19N			23					P2- 12	10N			22				
A 3	2			23O		20O	9	10		5			23O		20O	A 13		7A		
							A 13													
A 3A	4		SHLD A3	25N								E1	25N							
A 3L			P1-D*	19N			23					P2- 14	10N			22				
A 3R			P1-C*	19N			23					P2- 1	10N			22				
A 4	2			23O		20O	9	10		5			23O		20O	A 13		7A		
							A 13													
A 4A	4		SHLD A4	25N								E1	25N							
A 4L			P1-F*	19N			23					P2- 57	10N			22				
A 4R			P1-E*	19N			23					P2- 67	10N			22				
A 5	2			23O		20O	9	10		5			23O		20O	A 13		7A		
							A 13													
A 5A	4		SHLD A5	25N								E1	25N							

1 THE STD CONDUCTOR TERMINATION FIGURES ARE PER
2 DIMENSIONS ARE IN INCHES AND TWO PLACE DECIMALS.

MANNED SPACECRAFT CENTER HOUSTON, TEXAS | SIZE A | 1900980
SCALE - NONE | REV LTR A | SHEET 7 OF 13

MIL 2089 - 4-65 WIN

CONDUCTOR NUMBER	ITEM NO.	2	FROM CUT WIRE OR SHIELD STRIP WIRE OR JACKET CIRCUIT POINT	3	TYPE	2	TERMINATION SPEC. 1 ITEM NO.				NO.	TO CUT WIRE OR SHIELD STRIP WIRE OR JACKET CIRCUIT POINT	3	TYPE	2	TERMINATION SPEC 1 ITEM NO.				NO.
A 5L			P1-H*	19N			23					P2- 45	10N			22				
A 5R			P1-G*	19N			23					P2- 35	10N			22				
A 6	3			28O		25O	7	8		5			28O		25O	A 15		7A		
							A 13													
A 6A	4		SHLD A6	25N								E1	25N							
A 6W			P1-I*	19N			23					P2- 34	10N			22				
A 7	2			28O		25O	9	10		5			28O		25O	A 13		7A		
							A 13													
A 7A	4		SHLD A7	25N								E1	25N							
A 7L			P1-K*	19N			23					P2- 6	10N			22				
A 7R			P1-J*	19N			23					P2- 20	10N			22				
A 8	2			28O		25O	9	10		5			28O		25O	A 13		7A		
							A 13													
A 8A	4		SHLD A8	25N								E2	25N							
A 8L			P1-N*	19N			23					P2- 7	10N			22				
A 8R			P1-M*	19N			23					P2- 21	10N			22				
A 9	2			28O		25O	9	10		5			28O		25O					
							A 13													

1 THE STD CONDUCTOR TERMINATION FIGURES ARE PER
2 DIMENSIONS ARE IN INCHES AND TWO PLACE DECIMALS.

MANNED SPACECRAFT CENTER HOUSTON, TEXAS | SIZE A | 1900980
SCALE - NONE | REV LTR A | SHEET 8 OF 13

MIL 2089 - 4-65 WIN

GII CABLE W53 B 1900980

CONDUCTOR INDIVIDUAL LENGTH NUMBER	ITEM NO.	2	FROM CUT WIRE OR SHIELD STRIP WIRE OR JACKET CIRCUIT POINT	2	TIN	2	TERMINATION SPEC. 1	NO.	TO CUT WIRE OR SHIELD STRIP WIRE OR JACKET CIRCUIT POINT	2	TIN	2	TERMINATION SPEC. 1	NO.
A 9A	4		SHLD A9	25N					E2	25N				
A 9L			P1-Q*	19N		23			P2- 90	10N		22		
A 9R			P1-P*	19N		23			P2-104	10N		22		
A 10	2			33O	30O	9 10		5		33O	30O	A 13		7A
						A 13								
A 10A	4		SHLD A10	25N					E2	25N				
A 10L			P1-S*	19N		23			P2- 86	10N		22		
A 10R			P1-R*	19N		23			P2-100	10N		22		
A 11	2			33O	30O	9 10		5		33O	30O	A 13		7A
						A 13								
A 11A	4		SHLD A11	25N					E2	25N				
A 11L			P1-U*	19N		23			P2- 87	10N		22		
A 11R			P1-T*	19N		23			P2-101	10N		22		
A 12	1			33O	30O	11 12		5		33O	30O	A 14		7A
						A 14								
A 12A	4		SHLD A12	25N					P1-C	19N				
A 12L			P1-W*	19N		23			P2-108	10N		22		
A 12R			P1-V*	19N		23			P2-107	10N		22		

1 THE STD CONDUCTOR TERMINATION FIGURES ARE PER
2 DIMENSIONS ARE IN INCHES AND TWO PLACE DECIMALS.

MANNED SPACECRAFT CENTER HOUSTON, TEXAS | SIZE A | 1900980
SCALE-NONE | REV LTR B | SHEET 9 OF 13

MIL 2069 - 4-63 WIR

GII CABLE W53 A 1900980

CONDUCTOR INDIVIDUAL LENGTH NUMBER	ITEM NO.	2	FROM CUT WIRE OR SHIELD STRIP WIRE OR JACKET CIRCUIT POINT	2	TIN	2	TERMINATION SPEC. 1	NO.	TO CUT WIRE OR SHIELD STRIP WIRE OR JACKET CIRCUIT POINT	2	TIN	2	TERMINATION SPEC. 1	NO.
A 12Y			P1-X*	19N		23			P2- 94	10N		22		
A 13	2			33O	30O	9 10		5		33J	30O	A 13		7A
						A 13								
A 13A	4		SHLD A13	25N					E2	25N				
A 13L			P1-Z*	19N		23			P2- 50	10N		22		
A 13R			P1-Y*	19N		23			P2- 60	10N		22		
A 14	4		P1-AA	19N		23			P2- 16	10N		22		
A 15	2			38O	35O	9 10		5		38O	35O	A 13		7A
						A 13								
A 15A	4		SHLD A15	25N					E3	25N				
A 15L			P1-CC	19N		23			P2- 2	10N				
A 15R			P1-BB	19N		23			P2- 3	10N				
A 16	1			38O	35O	11 12		5		38O	35O	A 14		7A
						A 14								
A 16A	4		SHLD A16	25N					E3	25N				
A 16L			P1-FF	19N		23			P2-105	10N		22		
A 16R			P1-EE	19N		23			P2- 92	10N		22		
A 16Y			P1-GG	19N		23			P2-106	10N		22		

1 THE STD CONDUCTOR TERMINATION FIGURES ARE PER
2 DIMENSIONS ARE IN INCHES AND TWO PLACE DECIMALS.

MANNED SPACECRAFT CENTER HOUSTON, TEXAS | SIZE A | 1900980
SCALE-NONE | REV LTR A | SHEET 10 OF 13

MIL 2069 - 4-63 WIR

GII CABLE W53 C 1900980

CONDUCTOR INDIVIDUAL LENGTH NUMBER	ITEM NO.	2	FROM CUT WIRE OR SHIELD STRIP WIRE OR JACKET CIRCUIT POINT	2	TIN	2	TERMINATION SPEC. 1	NO.	TO CUT WIRE OR SHIELD STRIP WIRE OR JACKET CIRCUIT POINT	2	TIN	2	TERMINATION SPEC. 1	NO.
A 17	1			38O	35O	11 12		5		38O	35O	A 14		7A
						A 14								
A 17A	4		SHLD A17	25N					E3	25N				
A 17L			P1-JJ	19N		23			P2- 31	10N		22		
A 17R			P1-HH	19N		23			P2- 32	10N		22		
A 17Y			P1-KK	19N		23			P2- 43	10N		22		
A 18	2			38O	35O	9 10		5		38O	35O	A 13		7A
						A 13								
A 18A	4		SHLD A18	25N					E3	25N				
A 18L			P1-MM	19N		23			P2- 29	10N		22		
A 18R			P1-LL	19N		23			P2- 28	10N		22		
A 19	4		P3- 1	25N		26			P2- 41	10N		22		
A 19L			DELETED											
A 20	3			43O	40O	7 8		5		43O	40O	A 15		7A
						A 13								
A 20A	4		SHLD A20	25N					E3	25N				
A 20W			P1-NN	19N		23			P2- 11	10N		22		
A 21	3			43O	40O	7 8		5		43O	40O	A 15		7A

1 THE STD CONDUCTOR TERMINATION FIGURES ARE PER
2 DIMENSIONS ARE IN INCHES AND TWO PLACE DECIMALS.

MANNED SPACECRAFT CENTER HOUSTON, TEXAS | SIZE A | 1900980
SCALE-NONE | REV LTR C | SHEET 11 OF 13

MIL 2069 - 4-63 WIR

GII CABLE W53 A 1900980

CONDUCTOR INDIVIDUAL LENGTH NUMBER	ITEM NO.	2	FROM CUT WIRE OR SHIELD STRIP WIRE OR JACKET CIRCUIT POINT	2	TIN	2	TERMINATION SPEC. 1	NO.	TO CUT WIRE OR SHIELD STRIP WIRE OR JACKET CIRCUIT POINT	2	TIN	2	TERMINATION SPEC. 1	NO.
						A 13								
A 21A	4		SHLD A21	25N					E3	25N				
A 21W			P1-PP	19N		23			P2- 25	10N		22		
A 22	4		P1-B	19N		23			E1	25N				
A 23	4		E2	25N					E1	25N				
A 24	4		E3	25N					E2	25N				
A 25	4		P1-DD	19N		23			P2- 15	10N		22		

1 THE STD CONDUCTOR TERMINATION FIGURES ARE PER
2 DIMENSIONS ARE IN INCHES AND TWO PLACE DECIMALS.

MANNED SPACECRAFT CENTER HOUSTON, TEXAS | SIZE A | 1900980
SCALE-NONE | REV LTR A | SHEET 12 OF 13

MIL 2069 - 4-63 WIR

0860061

REVISIONS					
SYM	ZONE	DESCRIPTION	CHG NO.	DATE	APPD.
		SEE SHEET 1 FOR REVISION RECORD			

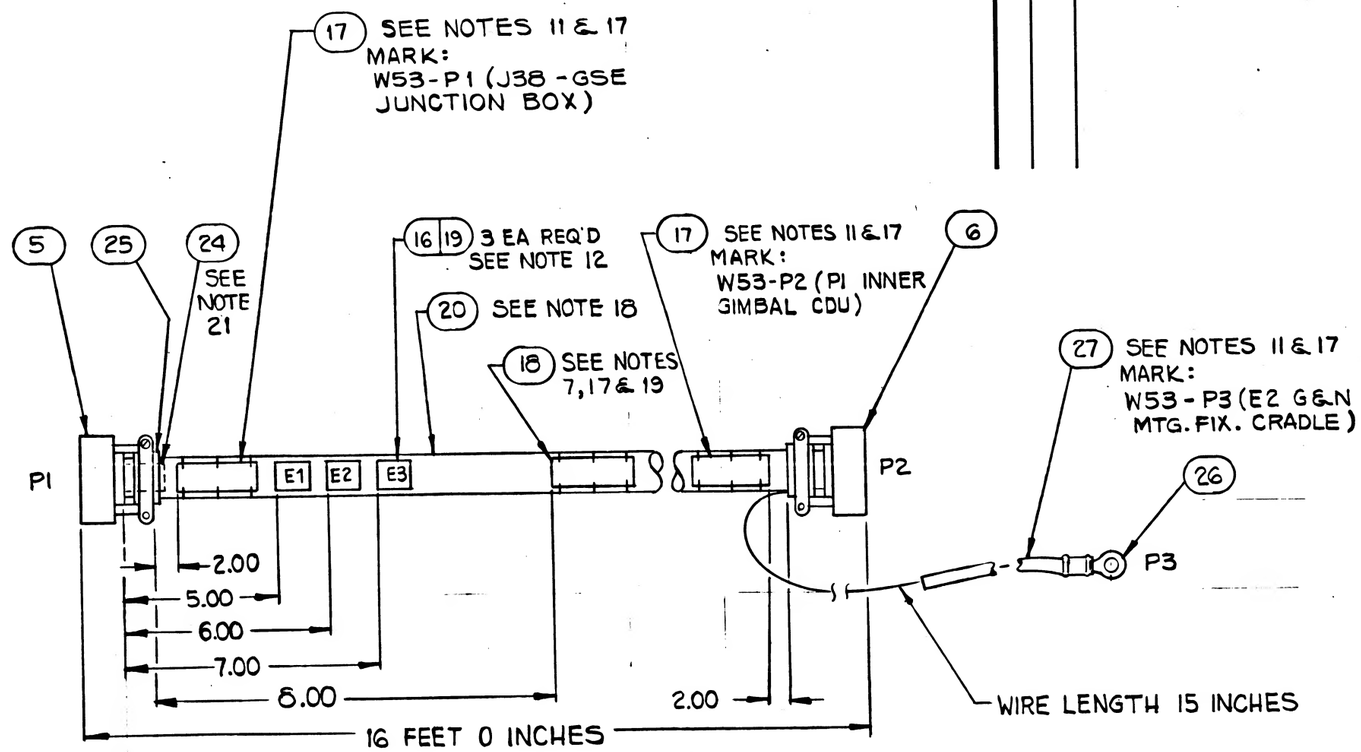

LOCATION TOLERANCE
(EXCEPT LENGTH): ±.50

NEXT ASSY	USED ON	UNLESS OTHERWISE SPECIFIED DIMENSIONS ARE IN INCHES TOLERANCES ON FRACTIONS + — DECIMALS + — ANGLES + —	AC SPARK PLUG DIVISION, GMC MILWAUKEE, WISCONSIN	MANNED SPACECRAFT CENTER HOUSTON, TEXAS
APPLICATION			ACSP PN	CABLE INTERCONNECT W53 ISS, OSS, TESTING
			DRAWN T. KOSMOTKA DATE 5 NOV 63	
			CHECKED M. MANNING 11 NOV 63	
			APPROVAL R.B. LIGON 12 NOV 63	
		DO NOT SCALE THIS DRAWING	APPROVAL	
		MATERIAL	NASA APPROVAL	CODE IDENT NO. / SIZE C / 1900980
		CONTRACT	MIT APPROVAL	SCALE NONE / SHEET 13 OF 13

MIL 1077C-P

1900980

PENNANT NOTE	GENERAL NOTES
1	SEE CONDUCTOR CHART, PENNANT NOTE 1.
2	SEE CONDUCTOR CHART, PENNANT NOTE 2.
3	INTERPRET DRAWING IN ACCORDANCE WITH STANDARDS PRESCRIBED BY MIL-D-70327.
4	MARK CONDUCTOR IDENTIFICATION ON SINGLE CONDUCTORS PER ND1002019 OMITTING ALL SUFFIX LETTERS EXCEPT A AND B.
5	SPACING OF CONDUCTOR IDENTIFICATION SHALL BE EVERY 15 INCHES MAX. AND AT EACH TERMINATION.
6	SPIRALLING OF THE MARKING IS ALLOWED.
7	IDENTIFY USING DRAWING NO. AND REVISION LETTER PER MIL-STD-130 (ES-267). .12 INCH HIGH CHARACTERS WHITE.
8	Y OR N IN TINNED COLUMN INDICATES YES OR NO.
9	A LETTER WITH AN ASTERISK SUFFIX INDICATES A LOWER CASE LETTER.
10	VENDOR ITEM - SEE SPECIFICATION CONTROL DRAWING.
11	MARK IDENTIFICATION BAND WITH REFERENCE DESIGNATION AS NOTED .12 INCH HIGH COLOR WHITE, HOT IMPRESSION STAMPING PER ND1002019. CENTRALIZE.
12	MARK SLEEVING WITH REFERENCE DESIGNATIONS AS SHOWN .12 INCH HIGH, COLOR BLACK PER ND1002019.
13	MARK SLEEVING OF MULTI-CONDUCTORS WITH THE CONDUCTOR NUMBER .12 INCH HIGH, COLOR BLACK, PER ND1002019 WHEN SLEEVING ITEM NUMBERS FOLLOW AN A OR T IN THE ACCESSORIES ITEM NUMBER FIELD.

MANNED SPACECRAFT CENTER HOUSTON, TEXAS	SIZE A	1900980
SCALE - NONE	REV LTR D	SHEET 2 OF 13

MIL 2084 4-63

PENNANT NOTE	GENERAL NOTES
14	A OR T PREFIX IN THE ACCESSORIES ITEM NUMBER COLUMN INDICATES THE READING POSITION AWAY FROM TERMINATION OR TOWARD TERMINATION RESPECTIVELY, OF THE WIRE MARKER SLEEVE.
15	THE SUFFIX LETTER OF A CONDUCTOR IDENTIFICATION NUMBER INDICATES CONDUCTOR SHIELDING, COLOR, OR MARKING. A - FROM END SHIELD L - WHITE WITH BLUE TRACER R - WHITE WITH RED TRACER W - WHITE Y - WHITE WITH YELLOW TRACER
16	ASSEMBLE CONTACTS IN ALL CONNECTOR GROMMET HOLES.
17	SECURE TO CABLE USING ITEM 21, MARKING TO READ AWAY FROM CONNECTOR.
18	SEAL ZIPPER TUBING PER ND1002153
19	SERIALIZE PER ND1002023
20	ITEM 23 FURNISHED WITH ITEM 5.
21	ITEM 24 SHALL BE SHORTENED WHEN NECESSARY TO AVOID INTERFERENCE WITH FERRULES AND MAY BE CUT LENGTHWISE ON ONE SIDE. SELECT ONE OR MORE OF ITEM 24 AS REQUIRED TO FIT.
22	SEE NOTE 10 AND 16

MANNED SPACECRAFT CENTER HOUSTON, TEXAS	SIZE A	1900980
SCALE - NONE	REV LTR C	SHEET 3 OF 13

MIL 2084 4-63

FOR INFORMATION ONLY

CLASS B RELEASE TDR No. 25663 DATE 1/7/64

APPLICATION		REVISIONS			
NEXT ASSY	USED ON	SYM	DESCRIPTION	DATE	APPROVAL
1900908	1900005-011	A	CHANGE IN ACCORDANCE WITH CM-199765 TDR 09630	17 FEB 64	J.B.
		B	CHANGE IN ACCORDANCE WITH CM-195637 TDR 09031	17 MAR 64	RAE
		C	CHANGE IN ACCORDANCE WITH CM197535 TDR 10688 REVISED CUSTOMER DATA 12-64	27 MAY 64	RB MEM
		D	CHANGE IN ACCORDANCE WITH CM 199017 DEC 12279	30 DEC 64	JWP

REV	A	C	A	D	A	C	A	D
SHEET	1	2	3	4	5	6	7	8	9	10	11	12	13
REV STATUS	D	D											
OF SHEETS													

AC SPARK PLUG DIVISION, GMC
MILWAUKEE, WISCONSIN

ACSP PN

DRAWN DATE 5 MAY 63
CHECKED 11 MAY 63
APPROVAL 15 NOV 63
APPROVAL 11/3/63

MANNED SPACECRAFT CENTER HOUSTON, TEXAS

CABLE INTERCONNECT W53
ISS, OSS, TESTING

CODE IDENT NO. SIZE A 1900980 REV D

NASA APPROVAL
MIT APPROVAL
CONTRACT NAS9-497 SCALE NONE SHEET 1 OF 13

PENNANT NOTE — GENERAL NOTES

TOLERANCE CHART, UNLESS OTHERWISE SPECIFIED ---

APPLICABLE LENGTH FOR WIRE OR CABLE, STRIP WIRE, STRIP JACKET, CUT WIRE OR CUT SHIELD.	TOLERANCE: WIRE OR CABLE	STRIP WIRE	STRIP JACKET	CUT WIRE	CUT SHIELD
UNDER 1 INCH	+ .06-.00	+.03-.00	+.06-.06	+.06-.06	+.06-.06
1 INCH TO 6 INCHES	+ .50-.00	+.06-.00	+.25-.25	+.25-.25	+.25-.25
6 INCHES TO 6 FEET	+1.00-.00		+.50-.50	+.50-.50	+.50-.50
OVER 6 FEET	+2.00-.00				

MANNED SPACECRAFT CENTER HOUSTON, TEXAS	SIZE A	1900980
SCALE - NONE	REV LTR A	SHEET 4 OF 13

MIL 2084 4-63

INCHES 0 1 2 3 4 5 6 7 8 9 10 11 12 13 14 15 16 17 18 19 20 21 22 23 24 25 26 27 28 29 30 31 32 33 34 35 36 37 38 39 40 41 42 43 44 45 46 47 48 49 50 51 52 53 54 55 56 57 58 59 60 61 62 63 64 65 66 67 68 69 70 71 72 73 74 75 76 77 78 79 80 81 82 83 84 85 86 87 88 89 90 91 92 93 94 95 96 97 98 99 100 101 102 103 104 105 106 107 108 109 110 111 112 113 114 115 116 117 118 119 120 121 122 123 124 125 126 127 128 129 130 131 132 133 134 135 136 137 138 139 140 141 142 143 144 145 146 147 148 149 150 151 152 153 154 155 156 157 158 159 160 161 162 163 164 165 166 167 168 169 170 171 172 173 174 175 176 177 178 179 180 181 182 183 184 185 186 187 188 189 190 191 192 193 194 195 196 197 198 199 200 201 202 203 204 205 206 207 208 209 210 211 212 213 214 215 216 217 218 219 220 221 222 223 224 225 226 227 228 229 230 231 232 233 234 235 236 237 238 239 240 241 242 243 244 245 246 247 248 249 250 251 252 253 254 255 256 257 258 259 260 261 262 263 264 265 266 267 268 269 270 271 272 273 274 275 276 277 278 279 280 281 282 283 284 285 286 287 288 289 290 291 292 293 294 295 296 297 298 299 300 301 302 303 304 305 306 307 308 309 310 311 312 313 314 315 316 317 318 319 320 321 322 323 324 325 326 327 328 329 330 331 332 333 334 335 336 337 338 339 340 341 342 343 344 345 346 347 348 349 350 351 352 353 354 355 356 357 358 359 360 361 362 363 364 365 366 367 368 369 370 371 372 373 374 375 376 377 378 379 380 381 382 383 384 385 386 387 388 389 390 391 392 393 394 395 396 397 398 399 400 401 402 403 404 405 406 407 408 409 410 411 412 413 414 415 416 417 418 419 420 421 422 423 424 425 426 427 428 429 430 431 432 433 434 435 436 437 438 439 440 441 442 443 444 445 446 447 448 449 450 451 452 453 454 455 456 457 458 459 460 461 462 463 464 465 466 467 468 469 470 471 472 473 474 475 476 477 478 479 480 481 482 483 484 485 486 487 488 489 490 491 492 493 494 495 496 497 498 499 500 501 502 503 504 505 506 507 508 509 510 511 512 513 514 515 516 517 518 519 520 521 522 523 524 525 526 527 528 529 530 531 532 533 534 535 536 537 538 539 540 541 542 543 544 545 546 547 548 549 550 551 552 553 554 555 556 557 558 559 560 561 562 563 564 565 566 567 568 569 570 571 572 573 574 575 576 577 578 579 580 581 582 583 584 585 586 587 588 589 590 591 592 593 594 595 596 597 598 599 600 601 602 603 604 605 606 607 608 609 610 611 612 613 614 615 616 617 618 619 620 621 622 623 624 625 626 627 628 629 630 631 632 633 634 635 636 637 638 639 640 641 642 643 644 645 646 647 648 649 650 651 652 653 654 655 656 657 658 659 660 661 662 663 664 665 666 667 668 669 670 671 672 673 674 675 676 677 678 679 680 681 682 683 684 685 686 687 688 689 690 691 692 693 694 695 696 697 698 699 700 701 702 703 704 705 706 707 708 709 710 711 712 713 714 715 716 717 718 719 720 721 722 723 724 725 726 727 728 729 730 731 732 733 734 735 736 737 738 739 740 741 742 743 744 745 746 747 748 749 750 751 752 753 754 755 756 757 758 759 760 761 762 763 764 765 766 767 768 769 770 771 772 773 774 775 776 777 778 779 780 781 782 783 784 785 786 787 788 789 790 791 792 793 794 795 796 797 798 799 800 801 802 803 804 805 806 807 808 809 810 811 812 813 814 815 816 817 818 819 820 821 822 823 824 825 826 827 828 829 830 831 832 833 834 835 836 837 838 839 840 841 842 843 844 845 846 847 848 849 850 851 852 853 854 855 856 857 858 859 860 861 862 863 864 865 866 867 868 869 870 871 872 873 874 875 876 877 878 879 880 881 882 883 884 885 886 887 888 889 890 891 892 893 894 895 896 897 898 899 900 901 902 903 904 905 906 907 908 909 910 911 912 913 914 915 916 917 918 919 920 921 922 923 924 925 926 927 928 929 930 931 932 933 934 935 936 937 938 939 940 941 942 943 944 945 946 947 948 949 950 951 952 953 954 955 956 957 958 959 960 961 962 963 964 965 966 967 968 969 970 971 972 973 974 975 976 977 978 979 980 981 982 983 984 985 986 987 988 989 990 991 992 993 994 995 996 997 998 999 1000

INCHES-METRIC SCALE OPT

PENNANT LIST OF MATERIALS

NOTE	ITEM	QTY	PART NO	DESCRIPTION
10	17	2	1016128-041	BAND IDENTIFICATION
10	18	1	1016128-011	BAND IDENTIFICATION
10	19	3	1016006-002	SPLICE REDUCER
	20	1	1900980-005	ZIPPER TUBING ND1002155 TYPE 1, PLASTIC FLEXIBLE 1 IN. DIA 16 FT TOTAL LENGTH
	21	AR	MIL-T-713	LACING TAPE, TYPE P, CLASS 2, BLACK (ES-2732 NO. 18)
10	22	108	1010464-002	CONTACT, SOCKET
20	23			CONTACT PIN
21	24	AR	1897147-104,-106,-108,-112,-116,	CABLE CLAMP SLEEVE
	25	1	1016282-024	RUBBER GROMMET
10	26	1	1015902- 46	TERMINAL LUG
	27	1	1900980-006	TUBING, MODIFIED POLYVINYL CHLORIDE, FLEXIBLE, SHRINK-FIT PER 1016197-006 6 INCH TOTAL LENGTH

MANNED SPACECRAFT CENTER HOUSTON, TEXAS	SIZE A	1900980
SCALE-NONE	REV LTR C	SHEET 6 OF 13

MIL 2084 4-63

PENNANT LIST OF MATERIALS

NOTE	ITEM	QTY	PART NO	DESCRIPTION
	1	1	1900980-001	WIRE ND1002181 TYPE 3, CLASS 4, WHITE JACKET 22AWG WHT/RED, WHT/BLU, WHT/YEL 48 FT TOT. LG
	2	1	1900980-002	WIRE ND1002181 TYPE 2, CLASS 4, WHT JACKET 22AWG WHT/RED, WHT/BLU 176 FT TOTAL LENGTH
	3	1	1900980-003	WIRE ND1002181 TYPE 1, CLASS 4, WHT JACKET 22AWG WHT 64 FT TOTAL LENGTH
	4	1	1900980-004	WIRE ND1002181 TYPE 1, CLASS 1, 22AWG WHT 75 FT TOTAL LENGTH
	5	1	MS3126F24-61PW (1897047-611)	CONNECTOR, PLUG
22	6	1	1010411-002	CONNECTOR, PLUG
10	7	4	1000243-003	FERRULE, ELEC COND
10	8	4	1000242-002	FERRULE, ELEC COND
10	9	11	1000243-008	FERRULE, ELEC COND
10	10	11	1000242-007	FERRULE, ELEC COND
10	11	3	1000243-011	FERRULE, ELEC COND
10	12	3	1000242-011	FERRULE, ELEC COND
10	13	26	1010490-198	INSULATION, SLEEVING ELEC
10	14	6	1010490-196	INSULATION, SLEEVING ELEC
10	15	4	1010490-200	INSULATION, SLEEVING ELEC
10	16	3	1010490-258	INSULATION, SLEEVING ELEC

MANNED SPACECRAFT CENTER HOUSTON, TEXAS	SIZE A	1900980
SCALE-NONE	REV LTR C	SHEET 5 OF 13

MIL 2084 4-63

CONDUCTOR			FROM									TO									
INDIVIDUAL LENGTH			CUT WIRE OR SHIELD					TERMINATION SPEC.			NO.	CUT WIRE OR SHIELD						TERMINATION SPEC.			NO.
NUMBER	ITEM NO.	2	STRIP WIRE OR JACKET			T I N	2	ITEM NO.				STRIP WIRE OR JACKET			T I N	2		ITEM NO.			
			CIRCUIT POINT									CIRCUIT POINT									
A	5L		P1-H*	19N		23						P2- 45	10N		22						
A	5R		P1-G*	19N		23						P2- 35	10N		22						
A	6	3		280	250	7	8		5				280	250	A	15		7A			
						A	13														
A	6A	4	SHLD A6	25N								E1	25N								
A	6W		P1-I*	19N		23						P2- 34	10N		22						
A	7	2		280	250	9	10		5				280	250	A	13		7A			
						A	13														
A	7A	4	SHLD A7	25N								E1	25N								
A	7L		P1-K*	19N		23						P2- 6	10N		22						
A	7R		P1-J*	19N		23						P2- 20	10N		22						
A	8	2		280	250	9	10		5				280	250	A	13		7A			
						A	13														
A	8A	4	SHLD A8	25N								E2	25N								
A	8L		P1-N*	19N		23						P2- 7	10N		22						
A	8R		P1-M*	19N		23						P2- 21	10N		22						
A	9	2		280	250	9	10		5				280	250							
						A	13														

1 THE STD CONDUCTOR TERMINATION FIGURES ARE PER
2 DIMENSIONS ARE IN INCHES AND TWO PLACE DECIMALS.

MANNED SPACECRAFT CENTER HOUSTON, TEXAS	SIZE A	1900980
SCALE-NONE	REV LTR A	SHEET 8 OF 13

MIL 2084 - 4-63 WIR

CONDUCTOR			FROM									TO									
INDIVIDUAL LENGTH			CUT WIRE OR SHIELD					TERMINATION SPEC.			NO.	CUT WIRE OR SHIELD						TERMINATION SPEC.			NO.
NUMBER	ITEM NO.	2	STRIP WIRE OR JACKET			T I N	2	ITEM NO.				STRIP WIRE OR JACKET			T I N	2		ITEM NO.			
			CIRCUIT POINT									CIRCUIT POINT									
A	1	4	P1-A*	19N		23						P2- 30	10N								
A	2	3		280	250	7	8		5				280	250	A	15		7A			
						A	13														
A	2A	4	SHLD A2	25N								E1	25N								
A	2W		P1-B*	19N		23						P2- 12	10N		22						
A	3	2		280	250	9	10		5				280	250	A	13		7A			
						A	13														
A	3A	4	SHLD A3	25N								E1	25N								
A	3L		P1-D*	19N		23						P2- 14	10N		22						
A	3R		P1-C*	19N		23						P2- 1	10N		22						
A	4	2		280	250	9	10		5				280	250	A	13		7A			
						A	13														
A	4A	4	SHLD A4	25N								E1	25N								
A	4L		P1-F*	19N		23						P2- 57	10N		22						
A	4R		P1-E*	19N		23						P2- 67	10N		22						
A	5	2		280	250	9	10		5				280	250	A	13		7A			
						A	13														
A	5A	4	SHLD A5	25N								E1	25N								

1 THE STD CONDUCTOR TERMINATION FIGURES ARE PER
2 DIMENSIONS ARE IN INCHES AND TWO PLACE DECIMALS.

MANNED SPACECRAFT CENTER HOUSTON, TEXAS	SIZE A	1900980
SCALE-NONE	REV LTR A	SHEET 7 OF 13

MIL 2084 - 4-63 WIR

INCHES

GII CABLE W53 A 1900980

CONDUCTOR INDIVIDUAL LENGTH NUMBER	ITEM NO.	2	FROM CUT WIRE OR SHIELD STRIP WIRE OR JACKET CIRCUIT POINT	2	T I N	2	TERMINATION SPEC. 1 ITEM NO.	NO.	TO CUT WIRE OR SHIELD STRIP WIRE OR JACKET CIRCUIT POINT	2	T I N	2	TERMINATION SPEC 1 ITEM NO.	NO.
A 12Y			P1-X*		19N		23		P2- 94		10N		22	
A 13	2			330	300		9 10	5		330	300		A 13	7A
							A 13							
A 13A	4		SHLD A13		25N				E2		25N			
A 13L			P1-Z*		19N		23		P2- 50		10N		22	
A 13R			P1-Y*		19N		23		P2- 60		10N		22	
A 14	4		P1-AA		19N		23		P2- 16		10N		22	
A 15	2			380	350		9 10	5		380	350		A 13	7A
							A 13							
A 15A	4		SHLD A15		25N				E3		25N			
A 15L			P1-CC		19N		23		P2- 2		10N			
A 15R			P1-BB		19N		23		P2- 3		10N			
A 16	1			380	350		11 12	5		380	350		A 14	7A
							A 14							
A 16A	4		SHLD A16		25N				E3		25N			
A 16L			P1-FF		19N		23		P2-105		10N		22	
A 16R			P1-EE		19N		23		P2- 92		10N		22	
A 16Y			P1-GG		19N		23		P2-106		10N		22	

1 THE STD CONDUCTOR TERMINATION FIGURES ARE PER
2 DIMENSIONS ARE IN INCHES AND TWO PLACE DECIMALS.

MANNED SPACECRAFT CENTER HOUSTON, TEXAS | SIZE A | 1900980
SCALE - NONE | REV LTR A | SHEET 10 OF 13

MIL 2089 - 4-63 WIR

GII CABLE W53 C 1900980

CONDUCTOR INDIVIDUAL LENGTH NUMBER	ITEM NO.	2	FROM CUT WIRE OR SHIELD STRIP WIRE OR JACKET CIRCUIT POINT	2	T I N	2	TERMINATION SPEC. 1 ITEM NO.	NO.	TO CUT WIRE OR SHIELD STRIP WIRE OR JACKET CIRCUIT POINT	2	T I N	2	TERMINATION SPEC 1 ITEM NO.	NO.
A 17	1			380	350		11 12	5		380	350		A 14	7A
							A 14							
A 17A	4		SHLD A17		25N				E3		25N			
A 17L			P1-JJ		19N		23		P2- 31		10N		22	
A 17R			P1-HH		19N		23		P2- 32		10N		22	
A 17Y			P1-KK		19N		23		P2- 43		10N		22	
A 18	2			380	350		9 10	5		380	350		A 13	7A
							A 13							
A 18A	4		SHLD A18		25N				E3		25N			
A 18L			P1-MM		19N		23		P2- 29		10N		22	
A 18R			P1-LL		19N		23		P2- 28		10N		22	
A 19	4		P3- 1		25N		26		P2- 41		10N		22	
A 19L			DELETED											
A 20	3			430	400		7 8	5		430	400		A 15	7A
							A 13							
A 20A	4		SHLD A20		25N				E3		25N			
A 20W			P1-NN		19N		23		P2- 11		10N		22	
A 21	3			430	400		7 8	5		430	400		A 15	7A

1 THE STD CONDUCTOR TERMINATION FIGURES ARE PER
2 DIMENSIONS ARE IN INCHES AND TWO PLACE DECIMALS.

MANNED SPACECRAFT CENTER HOUSTON, TEXAS | SIZE A | 1900980
SCALE - NONE | REV LTR C | SHEET 11 OF 13

MIL 2089 - 4-63 WIR

GII CABLE W53 D 1900980

CONDUCTOR INDIVIDUAL LENGTH NUMBER	ITEM NO.	2	FROM CUT WIRE OR SHIELD STRIP WIRE OR JACKET CIRCUIT POINT	2	T I N	2	TERMINATION SPEC. 1 ITEM NO.	NO.	TO CUT WIRE OR SHIELD STRIP WIRE OR JACKET CIRCUIT POINT	2	T I N	2	TERMINATION SPEC 1 ITEM NO.	NO.
A 9A	4		SHLD A9		25N				E2		25N			
A 9L			P1-Q*		19N		23		P2- 90		10N		22	
A 9R			P1-P*		19N		23		P2-104		10N		22	
A 10	2			330	300		9 10	5		330	300		A 13	7A
							A 13							
A 10A	4		SHLD A10		25N				E2		25N			
A 10L			P1-S*		19N		23		P2- 86		10N		22	
A 10R			P1-R*		19N		23		P2-100		10N		22	
A 11	2			330	300		9 10	5		330	300		A 13	7A
							A 13							
A 11A	4		SHLD A11		25N				E2		25N			
A 11L			P1-U*		19N		23		P2- 87		10N		22	
A 11R			P1-T*		19N		23		P2-101		10N		22	
A 12	1			330	300		11 12	5		330	300		A 14	7A
							A 14							
A 12A	4		SHLD A12		25N				P1-C		19N		23	
A 12L			P1-W*		19N		23		P2-108		10N		22	
A 12R			P1-V*		19N		23		P2-107		10N		22	

1 THE STD CONDUCTOR TERMINATION FIGURES ARE PER
2 DIMENSIONS ARE IN INCHES AND TWO PLACE DECIMALS.

MANNED SPACECRAFT CENTER HOUSTON, TEXAS | SIZE A | 1900980
SCALE - NONE | REV LTR D | SHEET 9 OF 13

MIL 2089 - 4-63 WIR

GII CABLE W53 A 1900980

CONDUCTOR INDIVIDUAL LENGTH NUMBER	ITEM NO.	2	FROM CUT WIRE OR SHIELD STRIP WIRE OR JACKET CIRCUIT POINT	2	T I N	2	TERMINATION SPEC. 1 ITEM NO.	NO.	TO CUT WIRE OR SHIELD STRIP WIRE OR JACKET CIRCUIT POINT	2	T I N	2	TERMINATION SPEC 1 ITEM NO.	NO.
							A 13							
A 21A	4		SHLD A21		25N				E3		25N			
A 21W			P1-PP		19N		23		P2- 25		10N		22	
A 22	4		P1-B		19N		23		E1		25N			
A 23	4		E2		25N				E1		25N			
A 24	4		E3		25N				E2		25N			
A 25	4		P1-DD		19N		23		P2- 15		10N		22	

1 THE STD CONDUCTOR TERMINATION FIGURES ARE PER
2 DIMENSIONS ARE IN INCHES AND TWO PLACE DECIMALS.

MANNED SPACECRAFT CENTER HOUSTON, TEXAS | SIZE A | 1900980
SCALE - NONE | REV LTR A | SHEET 12 OF 13

MIL 2089 - 4-63 WIR

INCHES

0860061

REVISIONS					
SYM	ZONE	DESCRIPTION	CHG NO.	DATE	APPD.
		SEE SHEET 1 FOR REVISION RECORD			

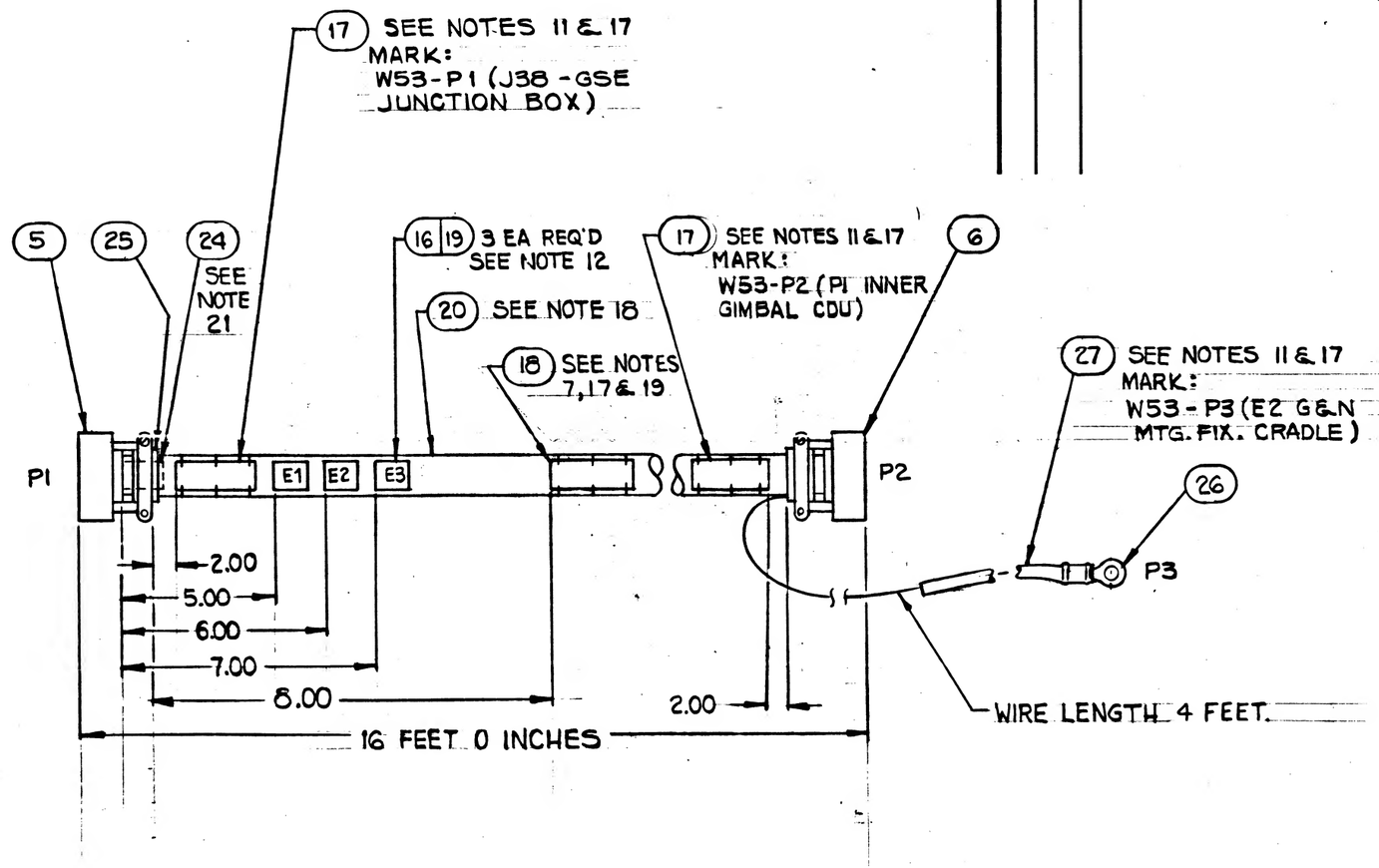

LOCATION TOLERANCE
(EXCEPT LENGTH): ±.50

NEXT ASSY	USED ON
APPLICATION	

UNLESS OTHERWISE SPECIFIED
DIMENSIONS ARE IN INCHES
TOLERANCES ON
FRACTIONS + — − — DECIMALS + — − — ANGLES + — − —
DO NOT SCALE THIS DRAWING
MATERIAL
CONTRACT NAS 9-497

AC SPARK PLUG DIVISION, GMC
MILWAUKEE, WISCONSIN
ACSP PN
DRAWN T. KOSMOTKA 5 NOV 63 DATE
CHECKED M. MANNING 11 NOV 63
APPROVAL R.B. LIGON 12 NOV 63
APPROVAL 9/14/64
NASA APPROVAL 9/15/64
MIT APPROVAL 9/15/64

MANNED SPACECRAFT CENTER
HOUSTON, TEXAS

CABLE INTERCONNECT W53
ISS, OSS, TESTING

CODE IDENT NO. | SIZE C | 1900980
SCALE NONE | SHEET 13 OF 15

MIL 1077C-P

INCHES 0 1 2
PHOTOGRAPHIC SCALE ONLY

REVISIONS

REV	DESCRIPTION	DATE	APPROVAL
A	CHANGE IN ACCORDANCE WITH CM-19376S TDR2 09030	17FEB64	J.B.
B	CHANGE IN ACCORDANCE WITH CM-1957637 TDR3 090331	17MAR64	
C	CHANGE IN ACCORDANCE WITH CM197535 TDR1 10688 REVISED CUSTOMER DATA V2-64	27-MAY64	EB
D	CHANGE IN ACCORDANCE WITH CM 199017 TDR1 12274	30JUL64	JWP
E	REVISED & UPGRADED TO CLASS A PER TDRR 14945	21DEC64	CHP

APPLICATION

NEXT ASSY	USED ON
1901308	1900005-011

REV STATUS	REV	E	D	C	A	E	E	A	A	D	A	C	A	D
SHEET		1	2	3	4	5	6	7	8	9	10	11	12	13

OF SHEETS

AC SPARK PLUG DIVISION, GMC
MILWAUKEE, WISCONSIN

ACSP PN

DRAWN 5 NOV 63
CHECKED 11 NOV 63
APPROVAL 12 NOV 63
APPROVAL 13/64
NASA APPROVAL
MIT APPROVAL

CONTRACT NAS9-497

MANNED SPACECRAFT CENTER
HOUSTON, TEXAS

CABLE INTERCONNECT W53 ISS, OSS, TESTING

CODE IDENT NO. | SIZE A | 1900980 | REV E

SCALE NONE | SHEET 1 OF 13

GENERAL NOTES

NOTES

1 SEE CONDUCTOR CHART

2 SEE CONDUCTOR CHART

3 INTERPRET DRAWING IN ACCORDANCE WITH STANDARDS PRESCRIBED BY MIL-D-70327.

4 MARK CONDUCTOR IDENTIFICATION ON SINGLE CONDUCTORS PER ND1002019 OMITTING ALL SUFFIX LETTERS EXCEPT A AND B.

5 SPACING OF CONDUCTOR IDENTIFICATION SHALL BE EVERY 15 INCHES MAX AND AT EACH TERMINATION.

6 SPIRALLING OF THE MARKING IS ALLOWED.

7 IDENTIFY USING DRAWING NO. AND REVISION LETTER PER MIL-STD-130 (ES-267). .12 INCH HIGH CHARACTERS BLACK.

8 Y OR N IN TINNED COLUMN INDICATES YES OR NO.

9 A LETTER WITH AN ASTERISK SUFFIX, INDICATES A LOWER CASE LETTER.

10 VENDOR ITEM - SEE SPECIFICATION CONTROL DRAWING.

11 MARK IDENTIFICATION BAND WITH REFERENCE DESIGNATION AS NOTED .12 INCH HIGH COLOR BLACK, HOT IMPRESSION STAMPING PER ND1002019. CENTRALIZE.

MANNED SPACECRAFT CENTER HOUSTON, TEXAS	SIZE A	1900980	
SCALE - NONE	REV LTR +		SHEET 2 OF 13

MIL 2084 4-63

GENERAL NOTES

NOTES

12 MARK SLEEVING WITH REFERENCE DESIGNATIONS AS SHOWN .12 INCH HIGH, COLOR BLACK PER ND1002019.

13 MARK SLEEVING OF MULTI-CONDUCTORS WITH THE CONDUCTOR NUMBER .12 INCH HIGH, COLOR BLACK, PER ND1002019 WHEN SLEEVING ITEM NUMBERS FOLLOW AN A OR T IN THE ACCESSORIES ITEM NUMBER FIELD.

14 A OR T PREFIX IN THE ACCESSORIES ITEM NUMBER COLUMN INDICATES THE READING POSITION AWAY FROM TERMINATION OR TOWARD TERMINATION RESPECTIVELY, OF THE WIRE MARKER SLEEVE.

15 THE SUFFIX LETTER OF A CONDUCTOR IDENTIFICATION NUMBER INDICATES CONDUCTOR SHIELDING, COLOR, OR MARKING.

- A - FROM END SHIELD
- L - WHITE WITH BLUE TRACER
- R - WHITE WITH RED TRACER
- Y - WHITE WITH YELLOW TRACER
- W - WHITE

16 ASSEMBLE CONTACTS IN ALL CONNECTOR GROMMET HOLES.

17 SECURE TO CABLE USING ITEM 21. MARKING TO READ AWAY FROM CONNECTOR.

18 SEAL ZIPPER TUBING PER ND 1002153.

19. SERIALIZE PER ND 1002023.

MANNED SPACECRAFT CENTER HOUSTON, TEXAS	SIZE A	1900980	
SCALE - NONE	REV LTR +		SHEET 3 OF 13

MIL 2084 4-63

APPLICATION		REVISIONS			
NEXT ASSY	USED ON	SYM	DESCRIPTION	DATE	APPROVAL
1900005-011	1900005-011				

FOR INFORMATION ONLY

CLASS B RELEASE TDR No. 25663 DATE 1/7/64

REV												
SHEET												
REV STATUS	+	+	+	+	+	+	+	+	+	+	+	+
OF SHEETS	SHEET 1	2	3	4	5	6	7	8	9	10	11	12	13

MANNED SPACECRAFT CENTER HOUSTON, TEXAS

CABLE INTERCONNECT W53
ISS, OSS, TESTING

AC SPARK PLUG DIVISION, GMC
MILWAUKEE, WISCONSIN

ACSP PN

DRAWN T. Tomasello DATE 5 NOV 63
CHECKED [illegible] DATE 11/14/63
APPROVAL E.E. Lieck DATE 12 NOV 63
APPROVAL C. Gedimas DATE 11/13/63

CODE IDENT NO. 1900980 SIZE A REV +

SCALE NONE SHEET 1 OF 13

NASA APPROVAL [illegible]
MIT APPROVAL [illegible]

CONTRACT NAS9-497

GENERAL NOTES

TOLERANCE CHART, UNLESS OTHERWISE SPECIFIED ---

APPLICABLE LENGTH FOR WIRE OR CABLE, STRIP WIRE, STRIP JACKET, CUT WIRE OR CUT SHIELD	TOLERANCE				
	WIRE OR CABLE	STRIP WIRE	STRIP JACKET	CUT WIRE	CUT SHIELD
UNDER 1 INCH	+ .06-.00	+.03-.00	+.06-.06	+.06-.06	+.06-.06
1 INCH TO 6 INCHES	+ .50-.00	+.06-.00	+.25-.25	+.25-.25	+.25-.25
6 INCHES TO 6 FEET	+1.00-.00		+.50-.50	+.50-.50	+.50-.50
OVER 6 FEET	+2.00-.00				

MANNED SPACECRAFT CENTER HOUSTON, TEXAS	SIZE A	1900980	
SCALE - NONE	REV LTR +		SHEET 4 OF 13

MIL 2084 4-63

INCHES 0 1 2
PHOTOGRAPHIC SCALE ONLY

LIST OF MATERIAL

SEE NOTE	ITEM	REQ'D	PART NUMBER	DESCRIPTION
10	18	1	1016128-011	BAND IDENTIFICATION
10	19	3	1016006-002	SPLICE REDUCER
	20	1	1900980-005	ZIPPER TUBING ND 1002155 TYPE 1, PLASTIC FLEXIBLE 5/8 DIA 16 FT TOTAL LENGTH
	21	AR	MIL-T-713	LACING TAPE, TYPE P, CLASS 2, BLACK (ES-2732 NO. 18)
10	22	108	1010464-2	CONTACT, SOCKET

MANNED SPACECRAFT CENTER HOUSTON, TEXAS | SIZE A | 1900980
SCALE - NONE | REV LTR + | SHEET 6 OF 13

MIL 2084 4-63

GII CABLE W53 + 1900980

CONDUCTOR NUMBER	INDIVIDUAL LENGTH ITEM NO. [2]	FROM CUT WIRE OR SHIELD STRIP WIRE OR JACKET CIRCUIT POINT [2]	TIN [2]	TERMINATION SPEC. [1] ITEM NO.	NO.	TO CUT WIRE OR SHIELD STRIP WIRE OR JACKET CIRCUIT POINT [2]	TIN [2]	TERMINATION SPEC [1] ITEM NO.	NO.
A 1	4	P1-A*	22N			P2- 30	22N		
A 2	3		230	200 A 15	7A		230	200 7 8	5
								A 13	
A 2A	4	SHLD A2	37N			E1	37N		
A 2W		P1-B*				P2- 12	22N	22	
A 3	2		230	200 A 13	7A		230	200 9 10	5
								A 13	
A 3A	4	SHLD A3	37N			E1	37N		
A 3L		P1-D*	22N			P2- 14	22N	22	
A 3R		P1-C*	22N			P2- 1	22N	22	
A 4	2		230	200 A 13	7A		230	200 9 10	5
								A 13	
A 4A	4	SHLD A4	37N			E1	37N		
A 4L		P1-F*	22N			P2- 57	22N	22	
A 4R		P1-E*	22N			P2- 67	22N	22	
A 5	2		230	200 A 13	7A		230	200 9 10	5
								A 13	
A 5A	4	SHLD A5	37N			E1	37N		

[1] THE STD CONDUCTOR TERMINATION FIGURES ARE PER
[2] DIMENSIONS ARE IN INCHES AND TWO PLACE DECIMALS.

MANNED SPACECRAFT CENTER HOUSTON, TEXAS | SIZE A | 1900980
SCALE - NONE | REV LTR + | SHEET 7 OF 13

MIL 2085 - 4-63 WIR

LIST OF MATERIAL

SEE NOTE	ITEM	REQ'D	PART NUMBER	DESCRIPTION
	1	1	1900980-001	WIRE ND 1002181 TYPE 3, CLASS 4, WHITE JACKET 22 AWG WHT/RED,WHT/BLU,WHT/YEL 48 FT. TOTAL LENGTH
	2	1	1900980-002	WIRE ND 1002181 TYPE 2, CLASS 4, WHT JACKET 22 AWG WHT/RED,WHT/BLU 176 FT TOTAL LENGTH
	3	1	1900980-003	WIRE ND 1002181 TYPE 1, CLASS 4, WHT JACKET 22 AWG WHT 64 FT TOTAL LENGTH
	4	1	1900980-004	WIRE ND 1002181 TYPE 1, CLASS 1, 22 AWG WHT 75 FT TOTAL LENGTH
10	5	1	MS3126F24-61PW	(1897047-611) CONNECTOR, PLUG
16	6	1	1010411-2	CONNECTOR, PLUG
10	7	4	1000243-003	FERRULE, ELEC COND
10	8	4	1000242-002	FERRULE, ELEC COND
10	9	11	1000243-008	FERRULE, ELEC COND
10	10	11	1000242-007	FERRULE, ELEC COND
10	11	3	1000243-011	FERRULE, ELEC COND
10	12	3	1000242-011	FERRULE, ELEC COND
10	13	26	1010490-198	INSULATION, SLEEVING ELEC
10	14	6	1010490-196	INSULATION, SLEEVING ELEC
10	15	4	1010490-200	INSULATION, SLEEVING ELEC
10	16	3	1010490-258	INSULATION, SLEEVING ELEC
10	17	2	1016128-041	BAND IDENTIFICATION

MANNED SPACECRAFT CENTER HOUSTON, TEXAS | SIZE A | 1900980
SCALE - NONE | REV LTR + | SHEET 5 OF 13

MIL 2084 4-63

GII CABLE W53 + 1900980

CONDUCTOR NUMBER	INDIVIDUAL LENGTH ITEM NO. [2]	FROM CUT WIRE OR SHIELD STRIP WIRE OR JACKET CIRCUIT POINT [2]	TIN [2]	TERMINATION SPEC. [1] ITEM NO.	NO.	TO CUT WIRE OR SHIELD STRIP WIRE OR JACKET CIRCUIT POINT [2]	TIN [2]	TERMINATION SPEC [1] ITEM NO.	NO.
A 5L		P1-H*	22N			P2- 45	22N	22	
A 5R		P1-G*	22N			P2- 35	22N	22	
A 6	3		280	250 A 15	7A		280	250 7 8	5
								A 13	
A 6A	4	SHLD A6	37N			E1	37		
A 6W		P1-I*	22N			P2- 34		22	
A 7	2		280	250 A 13	7A		280	250 9 10	5
								A 13	
A 7A	4	SHLD A7	37N			E1	37N		
A 7L		P1-K*	22N			P2- 6	22N	22	
A 7R		P1-J*	22N			P2- 20	22N	22	
A 8	2		280	250 A 13	7A		280	250 9 10	5
								A 13	
A 8A	4	SHLD A8	37N			E2	37N		
A 8L		P1-N*	22N			P2- 7	22N	22	
A 8R		P1-M*	22N			P2- 21	22N	22	
A 9	2		280	250 A 13	7A		280	250 9 10	5
								A 13	

[1] THE STD CONDUCTOR TERMINATION FIGURES ARE PER
[2] DIMENSIONS ARE IN INCHES AND TWO PLACE DECIMALS.

MANNED SPACECRAFT CENTER HOUSTON, TEXAS | SIZE A | 1900980
SCALE - NONE | REV LTR + | SHEET 8 OF 13

MIL 2085 - 4-63 WIR

INCHES 0 1 2 PHOTOGRAPHIC SCALE ONLY

CONDUCTOR NUMBER	INDIVIDUAL LENGTH ITEM NO.	2	FROM CUT WIRE OR SHIELD STRIP WIRE OR JACKET	CIRCUIT POINT 2	T I N 2	TERMINATION SPEC. 1 ITEM NO.	NO.	TO CUT WIRE OR SHIELD STRIP WIRE OR JACKET	CIRCUIT POINT 2	T I N 2	TERMINATION SPEC 1 ITEM NO.	NO.
A 12Y			P1-X*	22N				P2- 94	22N		22	
A 13	2			330	300	A 13	7A		330	300	9 10	5
											A 13	
A 13A	4		SHLD A13	37N				E2	37N			
A 13L			P1-Z*	22N				P2- 50	22N		22	
A 13R			P1-Y*	22N				P2- 60	22N		22	
A 14	4		P1-AA	22N				P2- 16	22N		22	
A 15	2			380	350	A 13	7A		380	350	9 10	5
											A 13	
A 15A	4		SHLD A15	37N				E3	37N			
A 15L			P1-CC	22N				P2- 2	22N			
A 15R			P1-BB	22N				P2- 3	22N			
A 16	1			380	350	A 14	7A		380	350	11 12	5
											A 14	
A 16A	4		SHLD A16	37N				E3	37N			
A 16L			P1-FF	22N				P2-105	22N		22	
A 16R			P1-EE	22N				P2- 92	22N		22	
A 16Y			P1-GG	22N				P2-106	22N		22	

1 THE STD CONDUCTOR TERMINATION FIGURES ARE PER
2 DIMENSIONS ARE IN INCHES AND TWO PLACE DECIMALS.

MANNED SPACECRAFT CENTER HOUSTON, TEXAS | SIZE A | 1900980
SCALE - NONE | REV LTR + | SHEET 10 OF 13

MIL 2085 - 4-63 WIR

CONDUCTOR NUMBER	INDIVIDUAL LENGTH ITEM NO.	2	FROM CUT WIRE OR SHIELD STRIP WIRE OR JACKET	CIRCUIT POINT 2	T I N 2	TERMINATION SPEC. 1 ITEM NO.	NO.	TO CUT WIRE OR SHIELD STRIP WIRE OR JACKET	CIRCUIT POINT 2	T I N 2	TERMINATION SPEC 1 ITEM NO.	NO.
A 9A	4		SHLD A9	37N				E2	37N			
A 9L			P1-Q*	22N				P2- 90	22N		22	
A 9R			P1-P*	22N				P2-104	22N		22	
A 10	2			330	300	A 13	7A		330	300	9 10	5
											A 13	
A 10A	4		SHLD A10	37N				E2	37N			
A 10L			P1-S*	22N				P2- 86	22N		22	
A 10R			P1-R*	22N				P2-100	22N		22	
A 11	2			330	300	A 13	7A		330	300	9 10	5
											A 13	
A 11A	4		SHLD A11	37N				E2	37N			
A 11L			P1-U*	22N				P2- 87	22N		22	
A 11R			P1-T*	22N				P2-101	22N		22	
A 12	1			330	300	A 14	7A		330	300	11 12	5
											A 14	
A 12A	4		SHLD A12	37N				E2	37N			
A 12L			P1-W*	22N				P2-108	22N		22	
A 12R			P1-V*	22N				P2-107	22N		22	

1 THE STD CONDUCTOR TERMINATION FIGURES ARE PER
2 DIMENSIONS ARE IN INCHES AND TWO PLACE DECIMALS.

MANNED SPACECRAFT CENTER HOUSTON, TEXAS | SIZE A | 1900980
SCALE - NONE | REV LTR + | SHEET 9 OF 13

MIL 2085 - 4-63 WIR

CONDUCTOR NUMBER	INDIVIDUAL LENGTH ITEM NO.	2	FROM CUT WIRE OR SHIELD STRIP WIRE OR JACKET	CIRCUIT POINT 2	T I N 2	TERMINATION SPEC. 1 ITEM NO.	NO.	TO CUT WIRE OR SHIELD STRIP WIRE OR JACKET	CIRCUIT POINT 2	T I N 2	TERMINATION SPEC 1 ITEM NO.	NO.
A 17	1			380	350	A 14	7A		380	350	11 12	5
											A 14	
A 17A	4		SHLD A17	37N				E3	37N			
A 17L			P1-JJ	22N				P2- 31	22N		22	
A 17R			P1-HH	22N				P2- 32	22N		22	
A 17Y			P1-KK	22N				P2- 43	22N		22	
A 18	2			380	350	A 13	7A		380	350	9 10	5
											A 13	
A 18A	4		SHLD A18	37N				E3	37N			
A 18L			P1-MM	22N				P2- 29	22N		22	
A 18R			P1-LL	22N				P2- 28	22N		22	
A 19	4		P1-A	22N				P2- 41	22N		22	
A 20	3			430	400	A 15	7A		430	400	7 8	5
											A 13	
A 20A	4		SHLD A20	37N				E3	37N			
A 20W			P1-NN	22N				P2- 11	22N		22	
A 21	3			430	400	A 15	7A		430	400	7 8	5
											A 13	

1 THE STD CONDUCTOR TERMINATION FIGURES ARE PER
2 DIMENSIONS ARE IN INCHES AND TWO PLACE DECIMALS.

MANNED SPACECRAFT CENTER HOUSTON, TEXAS | SIZE A | 1900980
SCALE - NONE | REV LTR + | SHEET 11 OF 13

MIL 2085 - 4-63 WIR

CONDUCTOR NUMBER	INDIVIDUAL LENGTH ITEM NO.	2	FROM CUT WIRE OR SHIELD STRIP WIRE OR JACKET	CIRCUIT POINT 2	T I N 2	TERMINATION SPEC. 1 ITEM NO.	NO.	TO CUT WIRE OR SHIELD STRIP WIRE OR JACKET	CIRCUIT POINT 2	T I N 2	TERMINATION SPEC 1 ITEM NO.	NO.
A 21A	4		SHLD A21	37N				E3	37N			
A 21W			P1-PP	22N				P2- 25	22N		22	
A 22	4		P1-B	22N				E1	37N			
A 23	4		E2	37N				E1	37N			
A 24	4		E3	37N				E2	37N			
A 25	4		P1-DD	37N				P2- 15			22	

1 THE STD CONDUCTOR TERMINATION FIGURES ARE PER
2 DIMENSIONS ARE IN INCHES AND TWO PLACE DECIMALS.

MANNED SPACECRAFT CENTER HOUSTON, TEXAS | SIZE A | 1900980
SCALE - NONE | REV LTR + | SHEET 12 OF 13

MIL 2085 - 4-63 WIR

INCHES 0 1 2
PHOTOGRAPHIC SCALE ONLY

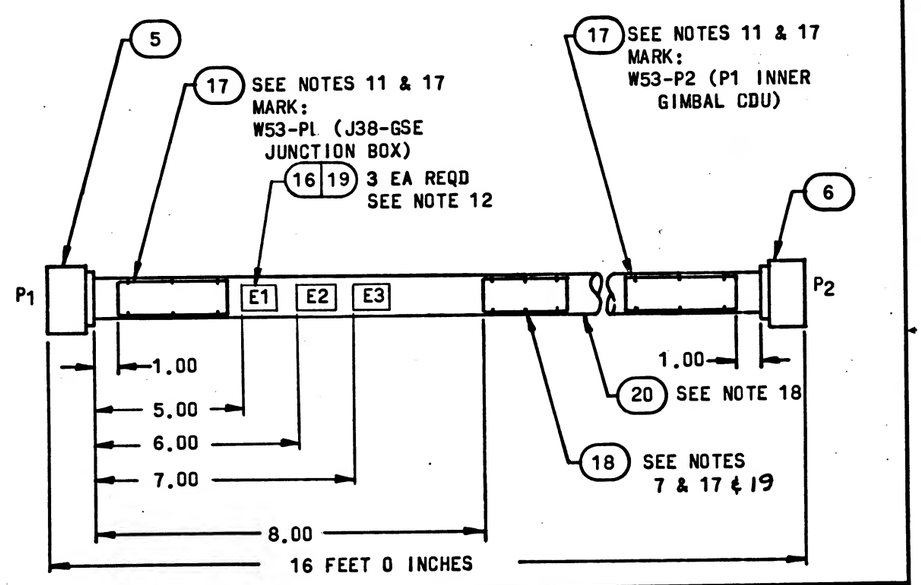

LOCATION TOLERANCE
(EXCEPT LENGTH): +.50
-.50

MANNED SPACECRAFT CENTER HOUSTON, TEXAS	SIZE A	1900980
SCALE-NONE	REV LTR +	SHEET 13 OF 13

MIL 2084 4-63

PHOTOGRAPHIC SCALE ONLY
INCHES
0 1 2

APPLICATION		REVISIONS			
NEXT ASSY	USED ON	SYM	DESCRIPTION	DATE	APPROVAL
1901308	1900005-011	A	CHANGE IN ACCORDANCE WITH CM-193766	18 FEB 64	J.B.

FOR INFORMATION ONLY

CLASS B RELEASE TDR No. 05663 DATE 1/7/64

REV	A	A	A	A	A	A	A	A	A	A	A	A	A	A	A
SHEET	1	2	3	4	5	6	7	8	9	10	11	12	13	14	15

REV STATUS OF SHEETS

AC SPARK PLUG DIVISION, GMC
MILWAUKEE, WISCONSIN

ACSP PN

DRAWN 7 NOV 63
CHECKED 11 NOV 63
APPROVAL 13 NOV 63
APPROVAL 1/3/64

MANNED SPACECRAFT CENTER
HOUSTON, TEXAS

CABLE INTERCONNECT W54
ISS TESTING

NASA APPROVAL
MIT APPROVAL 7 Jan 64

CODE IDENT NO. | SIZE A | 1900986 | REV A

CONTRACT NAS9-497 | SCALE | SHEET 1 OF 15

GIJ CABLE W-54 A 1900986

PENNANT GENERAL NOTES

NOTE

1. THE READING POSITION AWAY FROM TERMINATION OR TOWARD TERMINATION RESPECTIVELY, OF THE WIRE MARKER SLEEVE.
2. THE SUFFIX LETTER OF A CONDUCTOR IDENTIFICATION NUMBER INDICATES CONDUCTOR SHIELDING, COLOR, OR MARKING.
   - A - FROM END SHIELD
   - L - WHITE WITH BLUE TRACER
   - R - WHITE WITH RED TRACER
   - W - WHITE
16. ASSEMBLE CONTACTS IN ALL CONNECTOR GROMMET HOLES.
17. SECURE TO CABLE USING ITEM 21. MARKING TO READ AWAY FROM CONNECTOR.
18. SEAL ZIPPER TUBING PER MD10021193.
19. SERIALIZE PER MD1002023.
20. ITEM 23 FURNISHED WITH ITEM 5.
21. ITEM 26 FURNISHED WITH ITEM 4.
22. ITEM 24 SHALL BE SHORTENED WHEN NECESSARY TO AVOID INTERFERENCE WITH ADJACENT EQUIPMENT. MAY BE CUT LENGTHWISE ON ONE SIDE. SELECT ONE OR MORE OF ITEM 24 AS REQUIRED TO FIT.

MANNED SPACECRAFT CENTER HOUSTON, TEXAS | SIZE A | 1900986
SCALE NONE | REV LTR A | SHEET 3 OF 15

GIJ CABLE W-54 A 1900986

PENNANT GENERAL NOTES

NOTE

1. SEE CONDUCTOR CHART, PENNANT NOTE 1.
2. SEE CONDUCTOR CHART, PENNANT NOTE 2.
3. INTERPRET DRAWING IN ACCORDANCE WITH STANDARDS PRESCRIBED BY MIL-D-70327.
4. MARK CONDUCTOR IDENTIFICATION ON SINGLE CONDUCTORS PER MD1002019 OMITTING ALL SUFFIX LETTERS EXCEPT A AND B.
5. SPACING OF CONDUCTOR IDENTIFICATION SHALL BE EVERY 19 INCHES MAX. AND AT EACH TERMINATION.
6. SPIRALLING OF THE MARKING IS ALLOWED.
7. IDENTIFY USING DRAWING NO. AND REVISION LETTER PER MIL-STD-130 (ES-2671). .12 INCH HIGH CHARACTERS WHITE.
8. Y OR N IN TINNED COLUMN INDICATES YES OR NO.
9. A LETTER WITH AN ASTERISK SUFFIX, INDICATES A LOWER CASE LETTER.
10. VENDOR ITEM - SEE SPECIFICATION CONTROL DRAWING.
11. MARK IDENTIFICATION BAND WITH REFERENCE DESIGNATION AS NOTED .12 INCH HIGH, COLOR WHITE, HOT IMPRESSION STAMPING PER MD1002019. CERTIFIALIZE.
12. MARK SLEEVING WITH REFERENCE DESIGNATIONS AS SHOWN .12 INCH HIGH, COLOR BLACK PER MD1002019.
13. MARK SLEEVING OF MULTI-CONDUCTORS WITH THE CONDUCTOR NUMBER .12 INCH HIGH, COLOR BLACK, PER MD1002019 WHEN SLEEVING ITEM NUMBERS FOLLOW AN A OR Y IN THE ACCESSORIES ITEM NUMBER FIELD.
14. A OR Y PREFIX IN THE ACCESSORIES ITEM NUMBER COLUMN INDICATES

MANNED SPACECRAFT CENTER HOUSTON, TEXAS | SIZE A | 1900986
SCALE NONE | REV LTR A | SHEET 2 OF 15

GIJ CABLE W-54 A 1900986

PENNANT GENERAL NOTES

NOTE

TOLERANCE CHART, UNLESS OTHERWISE SPECIFIED —

APPLICABLE LENGTH	TOLERANCE
BARE WIRE, SHIELD, STRIP WIRE OR JACKET, CUT WIRE OR CUT SHIELD.	
UNDER 1 INCH	+.06-.00 +.03-.00 +.06-.06 +.06-.06 +.06-.06
1 INCH TO 6 INCHES	+.50-.00 +.06-.00 +.25-.25 +.25-.25 +.25-.25
6 INCHES TO 6 FEET	+1.00-.00 +.50-.50 +.50-.50 +.50-.50
OVER 6 FEET	+2.00-.00

WIRE OR CABLE	STRIP JACKET	WIRE	CUT SHIELD

MANNED SPACECRAFT CENTER HOUSTON, TEXAS | SIZE A | 1900986
SCALE NONE | REV LTR A | SHEET 4 OF 15

PENNANT LIST OF MATERIALS

NOTE	ITEM	QTY	PART NO	DESCRIPTION
	1	1	1900986-001	WIRE ND1002181 TYPE 2, CLASS 4, WHT JACKET 22AWG WHT/BLU, WHT/RED 128 FT TOTAL LENGTH
	2	1	1900986-002	WIRE ND1002181 TYPE 1, CLASS 4, WHT JACKET 22AWG WHT, 256 FT TOTAL LENGTH
	3	1	1900986-003	WIRE ND1002181 TYPE 1, CLASS 1, 22AWG, WHT 528 FT TOTAL LENGTH
	4	1	MS3126F22-55SW (1897046-551)	CONNECTOR PLUG
	5	1	MS3126F22-55PX (1897045-552)	CONNECTOR PLUG
16	6	1	1010607-001	CONNECTOR-PLUG
10	7	16	1000243-003	FERRULE, ELEC COND
10	8	16	1000242-002	FERRULE, ELEC COND
10	9	8	1000243-008	FERRULE, ELEC COND
10	10	8	1000242-007	FERRULE, ELEC COND
10	11	32	1010490-198	INSULATION-SLEEVING ELEC
10	12	16	1010490-200	INSULATION-SLEEVING ELEC
10	13	4	1010490-258	INSULATION-SLEEVING ELEC
10	14	4	1016006-002	SPLICE REDUCER
10	15	3	1016128-041	BAND-IDENTIFICATION
10	16	1	1016128-011	BAND-IDENTIFICATION
10	17	1	1016184-002	TRANSITION-HARNESS, 2 FINGER (Y)

MANNED SPACECRAFT CENTER HOUSTON, TEXAS | SIZE A | 1900986
SCALE-NONE | REV LTR A | SHEET 5 OF 15

PENNANT LIST OF MATERIALS

NOTE	ITEM	QTY	PART NO	DESCRIPTION
	18	1	1900986-004	ZIPPER TUBING ND1002159, TYPE 1, PLASTIC, FLEXIBLE 1 INCH DIA,13 FT TOTAL LENGTH
	19	1	1900986-005	ZIPPER TUBING ND1002155, TYPE 1, PLASTIC, FLEXIBLE 3/4 DIA 4 FT TOTAL LENGTH
	20	1	1900986-006	ZIPPER TUBING ND1002155, TYPE 1, PLASTIC, FLEXIBLE 7/8 DIA 4 FT TOTAL LENGTH
	21	AR	MIL-T-713	LACING TAPE TYPE B, CLASS 2, BLACK (ES-2732 NO. 18)
10	22	108	1010464-002	CONTACT SOCKET
20	23			CONTACT, PINS
22	24	AR	1897147-104, 106, 108, 112	CABLE CLAMP SLEEVE
	25	2	1016282-022	RUBBER GROMMET
21	26			CONTACT, SOCKET

MANNED SPACECRAFT CENTER HOUSTON, TEXAS | SIZE A | 1900986
SCALE-NONE | REV LTR A | SHEET 6 OF 15

CONDUCTOR INDIVIDUAL LENGTH NUMBER	ITEM NO. (1)		FROM CUT WIRE OR SHIELD STRIP WIRE OR JACKET CIRCUIT POINT	(2)	(3)	TERMINATION SPEC. (1) ITEM NO.	NO.	TO CUT WIRE OR SHIELD STRIP WIRE OR JACKET CIRCUIT POINT	(2)	(3)	TERMINATION SPEC. (1) ITEM NO.	NO.
A 1	3		P2-H*	22N	26			P3- 68	22N	22		
A 2	3		P2-J*	22N	26			P3- 93	22N	22		
A 3	2			23Q 200	7 8	5			23Q 200	A 12	7A	
					A 11							
A 3A	3		SHLD A3	37N				E1	37N			
A 3W			P2-K*	22N	26			P3- 90	22N	22		
A 4	2			23Q 200	7 8	5			23Q 200	A 12	7A	
					A 11							
A 4A	3		SHLD A4	37N				E1	37N			
A 4W			P2-M*	22N	26			P3-106	22N	22		
A 5	3		P2-N*	22N	26			P3- 78	22N	22		
A 6	3		P2-P*	22N	26			P3- 4	22N	22		
A 7	3		P2-Q*	22N	26			P3- 57	22N	22		
A 8	3		P2-R*	22N	26			P3- 12	22N	22		
A 9	3		P2-S*	22N	26			P3- 7	22N	22		
A 10	3		P2-T*	22N	26			P3- 55	22N	22		
A 11	3		P2-U*	22N	26			P3- 45	22N	22		
A 12	3		P2-V*	22N	26			P3- 65	22N	22		

(1) THE STD CONDUCTOR TERMINATION FIGURES ARE PER
(2) DIMENSIONS ARE IN INCHES AND TWO PLACE DECIMALS.

MANNED SPACECRAFT CENTER HOUSTON, TEXAS | SIZE A | 1900986
SCALE-NONE | REV LTR A | SHEET 7 OF 15

CONDUCTOR INDIVIDUAL LENGTH NUMBER	ITEM NO. (1)		FROM CUT WIRE OR SHIELD STRIP WIRE OR JACKET CIRCUIT POINT	(2)	(3)	TERMINATION SPEC. (1) ITEM NO.	NO.	TO CUT WIRE OR SHIELD STRIP WIRE OR JACKET CIRCUIT POINT	(2)	(3)	TERMINATION SPEC. (1) ITEM NO.	NO.
A 13	1			23Q 200	9 10	5			23Q 200	A 11	7A	
					A 11							
A 13A	3		SHLD A13	37N				E1	37N			
A 13L			P2-X*	22N	26			P3- 97	22N	22		
A 13R			P2-W*	22N	26			P3- 96	22N	22		
A 14	1			23Q 200	9 10	5			23Q 200	A 11	7A	
					A 11							
A 14A	3		SHLD A14	37N				E1	37N			
A 14L			P2-Z*	22N	26			P3- 11	22N	22		
A 14R			P2-Y*	22N	26			P3- 10	22N	22		
A 15	1			28Q 250	9 10	5			23Q 200	A 11	7A	
					A 11							
A 15A	3		SHLD A15	37N				E1	37N			
A 15L			P2-CC	22N	26			P3- 71	22N	22		
A 15R			P2-BB	22N	26			P3- 70	22N	22		
A 16	1			28Q 250	9 10	5			28Q 250	A 11	5	
					A 11							
A 16A	3		SHLD A16	37N				E1	37N			

(1) THE STD CONDUCTOR TERMINATION FIGURES ARE PER
(2) DIMENSIONS ARE IN INCHES AND TWO PLACE DECIMALS.

MANNED SPACECRAFT CENTER HOUSTON, TEXAS | SIZE A | 1900986
SCALE-NONE | REV LTR A | SHEET 8 OF 15

CONDUCTOR NUMBER	INDIVIDUAL LENGTH ITEM NO. 3	FROM CUT WIRE OR SHIELD STRIP WIRE OR JACKET	CIRCUIT POINT 2	T 3 N	TERMINATION SPEC 1	ITEM NO.	NO.	TO CUT WIRE OR SHIELD STRIP WIRE OR JACKET	CIRCUIT POINT 2	T 3 N	TERMINATION SPEC 1	ITEM NO.	NO.
A 16L		P2-EE	22N		26			P3- 83	22N		22		
A 16R		P2-DD	22N		26			P3- 82	22N		22		
A 17	2		28Q	25Q	7 8	5			28Q	25Q	A 12	5	
					A 11								
A 17A	3	SHLD A17	37N					E1	37N				
A 17W		P2-FF	22N		26			P3- 76	22N		22		
A 18	3	P2-GG	22N		26			P3- 89	22N		22		
A 19	3	P2-B	22N		26			E1	22N				
A 20	3	P1-A	22N		23			P3- 84	22N		22		
A 21	1		23Q	20Q	9 10	5			23Q	20Q	A 11	5	
					A 11								
A 21A	3	SHLD A21	37N					E2	37N				
A 21L		P1-N	22N		23			P3- 28	22N		22		
A 21R		P1-M	22N		23			P3- 29	22N		22		
A 22	1		23Q	20Q	9 10	5			23Q	20Q	A 11	7A	
					A 11								
A 22A	3	SHLD A22	37N					E2	37N				
A 22L		P1-R	22N		23			P3- 2	22N		22		

1> THE STD CONDUCTOR TERMINATION FIGURES ARE PER
2> DIMENSIONS ARE IN INCHES AND TWO PLACE DECIMALS.

MANNED SPACECRAFT CENTER HOUSTON, TEXAS | SIZE A | 1900986
SCALE-NONE | REV LTR A | SHEET 9 OF 15

CONDUCTOR NUMBER	INDIVIDUAL LENGTH ITEM NO. 3	FROM CUT WIRE OR SHIELD STRIP WIRE OR JACKET	CIRCUIT POINT 2	T 3 N	TERMINATION SPEC 1	ITEM NO.	NO.	TO CUT WIRE OR SHIELD STRIP WIRE OR JACKET	CIRCUIT POINT 2	T 3 N	TERMINATION SPEC 1	ITEM NO.	NO.
A 22W		P1-P	22N		23			P3- 1	22N		22		
A 23	1		23Q	20Q	9 10	5			23Q	20Q	A 11	7A	
					A 11								
A 23A	3	SHLD A23	37N					E2	37N				
A 23L		P1-T	22N		23			P3- 15	22N		22		
A 23R		P1-S	22N		23			P3- 14	22N		22		
A 24	3	P1-U	22N		23			P3- 9	22N		22		
A 25	3	P1-V	22N		23			P3- 25	22N		22		
A 26	3	P1-W	22N		23			P3- 79	22N		22		
A 27	2		23Q	20Q	7 8	5			23Q	20Q	A 12	7A	
					A 11								
A 27A	3	SHLD A27	37N					E2	37N				
A 27W		P1-X	22N		23			P3- 88	22N		22		
A 28	3	P1-Y	22N		23			P3- 46	22N		22		
A 29	3	P1-A*	22N		23			P3- 13	22N		22		
A 30	3	P1-B*	22N		23			P3- 6	22N		22		
A 31	3	P1-C*	22N		23			P3- 34	22N		22		
A 32	3	P1-Z	22N		23			P3- 18	22N		22		

1> THE STD CONDUCTOR TERMINATION FIGURES ARE PER
2> DIMENSIONS ARE IN INCHES AND TWO PLACE DECIMALS.

MANNED SPACECRAFT CENTER HOUSTON, TEXAS | SIZE A | 1900986
SCALE-NONE | REV LTR A | SHEET 10 OF 15

CONDUCTOR NUMBER	INDIVIDUAL LENGTH ITEM NO. 3	FROM CUT WIRE OR SHIELD STRIP WIRE OR JACKET	CIRCUIT POINT 2	T 3 N	TERMINATION SPEC 1	ITEM NO.	NO.	TO CUT WIRE OR SHIELD STRIP WIRE OR JACKET	CIRCUIT POINT 2	T 3 N	TERMINATION SPEC 1	ITEM NO.	NO.
A 33	2		28Q	25Q	7 8	5			28Q	25Q	A 12	7A	
					A 11								
A 33A	3	SHLD A33	37N					E2	37N				
A 33W		P1-D*	22N		23			P3- 49	22N		22		
A 34	2		28Q	25Q	7 8	5			28Q	25Q	A 12	7A	
					A 11								
A 34A	3	SHLD A34	37N					E2	37N				
A 34W		P1-F*	22N		23			P3-104	22N		22		
A 35	3	P1-G*	22N		23			P3- 56	22N		22		
A 36	2		28Q	25Q	7 8	5			28Q	25Q	A 12	7A	
					A 11								
A 36A	3	SHLD A36	37N					E3	37N				
A 36W		P1-H*	22N		23			P3- 92	22N		22		
A 37	3	P1-I*	22N		23			P3- 35	22N		22		
A 38	3	P1-J*	22N		23			P3- 36	22N		22		
A 39	2		28Q	25Q	7 8	5			28Q	25Q	A 12	7A	
					A 11								
A 39A	3	SHLD A39	37N					E3	37N				

1> THE STD CONDUCTOR TERMINATION FIGURES ARE PER
2> DIMENSIONS ARE IN INCHES AND TWO PLACE DECIMALS.

MANNED SPACECRAFT CENTER HOUSTON, TEXAS | SIZE A | 1900986
SCALE-NONE | REV LTR A | SHEET 11 OF 15

CONDUCTOR NUMBER	INDIVIDUAL LENGTH ITEM NO. 3	FROM CUT WIRE OR SHIELD STRIP WIRE OR JACKET	CIRCUIT POINT 2	T 3 N	TERMINATION SPEC 1	ITEM NO.	NO.	TO CUT WIRE OR SHIELD STRIP WIRE OR JACKET	CIRCUIT POINT 2	T 3 N	TERMINATION SPEC 1	ITEM NO.	NO.
A 39W		P1-E*	22N		23			P3-105	22N		22		
A 40	3	P1-M*	22N		23			P3- 37	22N		22		
A 41	3	P1-N*	22N		23			P3- 23	22N		22		
A 42	2		33Q	30Q	7 8	5			33Q	30Q	A 12	7A	
					A 11								
A 42A	3	SHLD A42	37N					E3	37				
A 42W		P1-P*	22N		23			P3- 94	22		22		
A 43	2		33Q	30Q	7 8	5			33Q	30Q	A 12	7A	
					A 11								
A 43A	3	SHLD A43	37N					E3	37N				
A 43W		P1-Q*	22N		23			P3- 22	22N		22		
A 44	3	P1-R*	22N		23			P3- 24	22N		22		
A 45	1		33Q	30Q	9 10	5			33Q	30Q	A 11	7A	
					A 11								
A 45A	3	SHLD A45	37N					E3	37N				
A 45L		P1-T*	22N		23			P3- 80	22N		22		
A 45R		P1-S*	22N		23			P3- 95	22N		22		
A 46	3	P1-U*	22N		23			P3- 58	22N		22		

1> THE STD CONDUCTOR TERMINATION FIGURES ARE PER
2> DIMENSIONS ARE IN INCHES AND TWO PLACE DECIMALS.

MANNED SPACECRAFT CENTER HOUSTON, TEXAS | SIZE A | 1900986
SCALE-NONE | REV LTR A | SHEET 12 OF 15

GIJ CABLE W-54 A 1900986

CONDUCTOR INDIVIDUAL LENGTH NUMBER	ITEM NO.	1	FROM CUT WIRE OR SHIELD STRIP WIRE OR JACKET CIRCUIT POINT	2	3	1	TERMINATION SPEC	2	NO.	TO CUT WIRE OR SHIELD STRIP WIRE OR JACKET CIRCUIT POINT	2	3	1	TERMINATION SPEC	2	NO.
A 47	2			33J	30Q	7	8		5		35Q	30Q	A 12		7A	
						A 11										
A 47A	3		SHLD A47	37N						E3	37N					
A 47W			P1-V*	22N	23					P3-108	22N	22				
A 48	2			38Q	35Q	7	8		5		38Q	35Q	A 12		7A	
						A 11										
A 48A	3		SHLD A48	37N						E4	37N					
A 48W			P1-W*	22N	23					P3-103	22N	22				
A 49	2			38Q	35Q	7	8		5		38Q	35Q	A 12		7A	
						A 11										
A 49A	3		SHLD A49	37N						E4	37N					
A 49W			P1-X*	22N	23					P3- 39	22N	22				
A 50	3		P1-Y*	22N	23					P3- 48	22N	22				
A 51	3		P1-Z*	22N	23					P3- 38	22N	22				
A 52	2			38Q	35Q	7	8		5		38Q	35Q	A 12		7A	
						A 11										
A 52A	3		SHLD A52	37N						E4	37N					
A 52W			P1-AA	22N	23					P3- 59	22N	22				

1. THE STD CONDUCTOR TERMINATION FIGURES ARE PER
2. DIMENSIONS ARE IN INCHES AND TWO PLACE DECIMALS.

MANNED SPACECRAFT CENTER HOUSTON, TEXAS | SIZE A | 1900986

SCALE - NONE | REV LTR A | SHEET 13 OF 15

GIJ CABLE W-54 A 1900986

CONDUCTOR INDIVIDUAL LENGTH NUMBER	ITEM NO.	1	FROM CUT WIRE OR SHIELD STRIP WIRE OR JACKET CIRCUIT POINT	2	3	1	TERMINATION SPEC	2	NO.	TO CUT WIRE OR SHIELD STRIP WIRE OR JACKET CIRCUIT POINT	2	3	1	TERMINATION SPEC	2	NO.
A 53	2			38Q	35Q	7	8		5		38Q	35Q	A 12		7A	
						A 11										
A 53A	3		SHLD A53	37N						E4	37N					
A 53W			P1-BB	22N	23					P3- 91	22N	22				
A 54	3		P1-CC	22N	23					P3- 47	22N	22				
A 55	3		P1-DD	22N	23					P3- 69	22N	22				
A 56	3		P1-EE	22N	23					P3- 5	22N	22				
A 57	3		P1-FF	22N	23					P3- 27	22N	22				
A 58	2			43Q	40Q	7	8		5		43Q	40Q	A 12		7A	
						A 11										
A 58A	3		SHLD A58	37N						E4	37N					
A 58W			P1-GG	22N	23					P3- 26	22N	22				
A 59	3		P1-B	22N	23					E2	37N					
A 60	3		E2	37N						E3	37N					
A 61	3		E3	37N						E4	37N					

1. THE STD CONDUCTOR TERMINATION FIGURES ARE PER
2. DIMENSIONS ARE IN INCHES AND TWO PLACE DECIMALS.

MANNED SPACECRAFT CENTER HOUSTON, TEXAS | SIZE A | 1900986

SCALE - NONE | REV LTR A | SHEET 14 OF 15

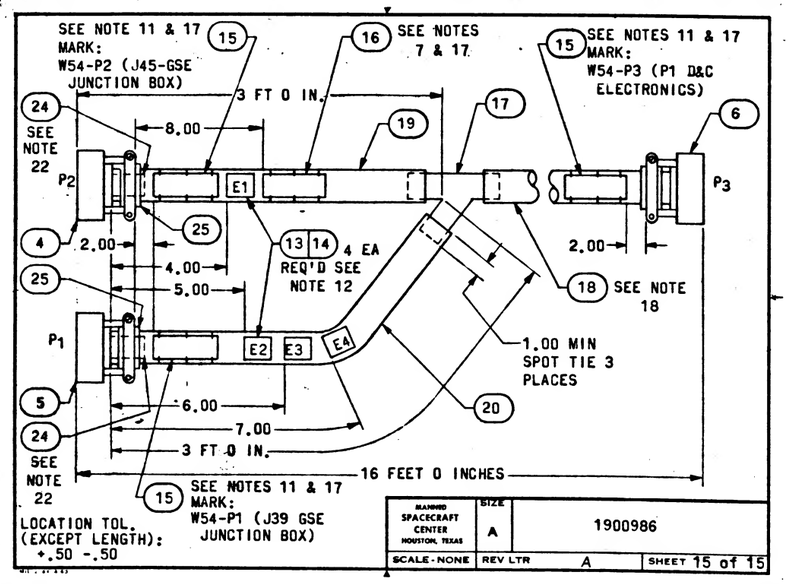

MANNED SPACECRAFT CENTER HOUSTON, TEXAS | SIZE A | 1900986

SCALE - NONE | REV LTR A | SHEET 15 of 15

APPLICATION		REVISIONS			
NEXT ASSY	USED ON	SYM	DESCRIPTION	DATE	APPROVAL
1901308	1900005-011 (B)	A	CHANGE IN ACCORDANCE WITH CM-193766 TDRR 09103	18 FEB 64	J.B. PJ
		B	CHANGE IN ACCORDANCE WITH CN-197536 REVISED CUSTOMER DATA (V2-64) 10688	27 MAY 64	BK PJ

FOR INFORMATION ONLY

CLASS B RELEASE TDR No. 05663 DATE 1/7/64

REV																							
SHEET																							
REV STATUS	REV	B	A	A	A	B	B	A	A	B	A	A	A	A	A	B							
OF SHEETS	SHEET	1	2	3	4	5	6	7	8	9	10	11	12	13	14	15							

AC SPARK PLUG DIVISION, GMC
MILWAUKEE, WISCONSIN

ACSP PN

DRAWN DATE 7 NOV 63
CHECKED 11 NOV 63
APPROVAL 13 NOV 63
APPROVAL 11/3/63

MANNED
SPACECRAFT CENTER
HOUSTON, TEXAS

CABLE INTERCONNECT W54
ISS TESTING

NASA APPROVAL
MIT APPROVAL 7 Jan 64

CODE IDENT NO.	SIZE		REV
	A	1900986	B

CONTRACT NAS9-497 SCALE SHEET 1 OF 15

61J CABLE W-54 A 1900986

PENNANT NOTE GENERAL NOTES

1 SEE CONDUCTOR CHART, PENNANT NOTE 1.

2 SEE CONDUCTOR CHART, PENNANT NOTE 2.

INTERPRET DRAWING IN ACCORDANCE WITH STANDARDS PRESCRIBED BY MIL-D-70327.

MARK CONDUCTOR IDENTIFICATION ON SINGLE CONDUCTORS PER ND1002019 OMITTING ALL SUFFIX LETTERS EXCEPT A AND B.

SPACING OF CONDUCTOR IDENTIFICATION SHALL BE EVERY 15 INCHES MAX. AND AT EACH TERMINATION.

SPIRALLING OF THE MARKING IS ALLOWED.

IDENTIFY USING DRAWING NO. AND REVISION LETTER PER MIL-STD-130 [illegible] .12 INCH HIGH CHARACTERS WHITE,

Y OR N IN TINNED COLUMN INDICATES YES OR NO.

A LETTER WITH AN ASTERISK SUFFIX, INDICATES A LOWER CASE LETTER.

VENDOR ITEM - SEE SPECIFICATION CONTROL DRAWING.

11 MARK IDENTIFICATION BAND WITH REFERENCE DESIGNATION AS NOTED .12 INCH HIGH COLOR WHITE. HOT IMPRESSION STAMPING PER ND1002019. CENTRALIZE.

12 MARK SLEEVING WITH REFERENCE DESIGNATIONS AS SHOWN .12 INCH HIGH, COLOR BLACK PER ND1002019.

13 MARK SLEEVING OF MULTI-CONDUCTORS WITH THE CONDUCTOR NUMBER .12 INCH HIGH, COLOR BLACK, PER ND1002019 WHEN SLEEVING ITEM NUMBERS FOLLOW AN A OR Y IN THE ACCESSORIES ITEM NUMBER FIELD.

A [illegible] PREFIX IN THE ACCESSORIES ITEM NUMBER COLUMN INDICATES

MANNED SPACECRAFT CENTER HOUSTON, TEXAS | SIZE A | 1900986
SCALE - NONE | REV LTR A | SHEET 2 OF 15

61J CABLE W-54 A 1900986

PENNANT NOTE GENERAL NOTES

THE READING POSITION AWAY FROM TERMINATION OR TOWARD TERMINATION RESPECTIVELY, OF THE WIRE MARKER SLEEVE.

15 THE SUFFIX LETTER OF A CONDUCTOR IDENTIFICATION NUMBER INDICATES CONDUCTOR SHIELDING, COLOR, OR MARKING.
A - FROM END SHIELD
L - WHITE WITH BLUE TRACER
R - WHITE WITH RED TRACER
W - WHITE

16 ASSEMBLE CONTACTS IN ALL CONNECTOR GROMMET HOLES.

17 SECURE TO CABLE USING ITEM 21, MARKING TO READ AWAY FROM CONNECTOR.

18 SEAL ZIPPER TUBING PER ND1002163.

19 SERIALIZE PER ND1002023.

20 ITEM 2[illegible] FURNISHED WITH ITEM 5.

21 ITEM 26 FURNISHED WITH ITEM 4.

22 ITEM 24 SHALL BE SHORTENED WHEN NECESSARY TO AVOID INTERFERENCE WITH FERRULES AND MAY BE CUT LENGTHWISE ON ONE SIDE. SELECT ONE OR MORE OF ITEM 24 AS REQUIRED TO FIT.

MANNED SPACECRAFT CENTER HOUSTON, TEXAS | SIZE A | 1900986
SCALE - NONE | REV LTR A | SHEET 3 OF 15

61J CABLE W-54 A 1900986

PENNANT NOTE GENERAL NOTES

TOLERANCE CHART, UNLESS OTHERWISE SPECIFIED —

APPLICABLE LENGTH FOR WIRE OR CABLE, STRIP WIRE, STRIP JACKET, CUT WIRE OR CUT SHIELD,	TOLERANCE				
	WIRE OR CABLE	STRIP WIRE	STRIP JACKET	CUT WIRE	CUT SHIELD
UNDER 1 INCH	+.06-.00	+.03-.00	+.06-.06	+.06-.06	+.06-.06
1 INCH TO 6 INCHES	+.50-.00	+.06-.00	+.25-.25	+.25-.25	+.25-.25
6 INCHES TO 6 FEET	+1.00-.00		+.50-.50	+.50-.50	+.50-.50
OVER 6 FEET	+2.00-.00				

MANNED SPACECRAFT CENTER HOUSTON, TEXAS | SIZE A | 1900986
SCALE - NONE | REV LTR A | SHEET 4 OF 15

61J CABLE W-54 B 1900986

LIST OF MATERIALS

PENNANT NOTE	ITEM	QTY	PART NO	DESCRIPTION
	1	1	1900986-001	WIRE ND1002181 TYPE 2, CLASS 4, WHT JACKET 22AWG WHT/BLU, WHT/RED 128 FT TOTAL LENGTH
	2	1	1900986-002	WIRE ND1002181 TYPE 1, CLASS 4, WHT JACKET 22AWG WHT, 256 FT TOTAL LENGTH
	3	1	1900986-003	WIRE ND1002181 TYPE 1, CLASS 1, 22AWG, WHT 528 FT TOTAL LENGTH
	4	1	MS3126F22-55SW	(1897046-551) CONNECTOR PLUG
	5	1	MS3126F22-55PX	(1897045-552) CONNECTOR PLUG
10, 16	6	1	1010607-001	CONNECTOR-PLUG
10	7	16	1000249-003	FERRULE, ELEC COND
10	8	16	1000242-002	FERRULE, ELEC COND
10	9	[illegible]	1000243-006	FERRULE, ELEC COND
10	10	8	1000242-007	FERRULE, ELEC COND
10	11	32	1010490-196	INSULATION-SLEEVING ELEC
10	12	36	1010490-200	INSULATION-SLEEVING ELEC
10	13	4	1010490-250	INSULATION-SLEEVING ELEC
10	14	4	1016006-002	SPLICE REDUCER
10	15	3	1016128-041	BAND-IDENTIFICATION
10	16	1	1016828-011	BAND-IDENTIFICATION
16	17	8	1016184-002	TRANSITION-HARNESS, 2 FINGER (Y)

MANNED SPACECRAFT CENTER HOUSTON, TEXAS | SIZE A | 1900986
SCALE - NONE | REV LTR B | SHEET 5 OF 15

PENNANT LIST OF MATERIALS

NOTE	ITEM	QTY	PART NO	DESCRIPTION
	18		1900986-004	ZIPPER TUBING ND1002159, TYPE 1, PLASTIC, FLEXIBLE 1 INCH DIA 13 FT TOTAL LENGTH
	19	1	1900986-005	ZIPPER TUBING ND1002159, TYPE 1, PLASTIC, FLEXIBLE 3/4 DIA, 4 FT TOTAL LENGTH
	20		1900986-006	ZIPPER TUBING ND1002159, TYPE 1, PLASTIC, FLEXIBLE 7/8 DIA 4 FT TOTAL LENGTH
	21	AR	MIL-T-713	LACING TAPE TYPE B, CLASS 2, BLACK (65-2332 NO. 18)
10	22	108	1010464-002	CONTACT SOCKET
20	23			CONTACT, PINS
22	24	AR	1097147-104	1061 100V 122, CABLE CLAMP SLEEVE
10	25		1016282-022	RUBBER GROMMET
21 R	26			CONTACT, SOCKET
10	27	1	1018902-46	TERMINAL LUG
	28		1900986-007	TUBING MODIFIED POLYVINYL CHLORIDE, FLEXIBLE SHRINK-FIT PER 1036197-006, 6 INCHES TOT. LGTH.

MANNED SPACECRAFT CENTER HOUSTON, TEXAS | SIZE A | 1900986

SCALE-NONE | REV LTR B | SHEET 6 OF 15

CONDUCTOR INDIVIDUAL LENGTH MARKER	ITEM NO.	FROM CUT WIRE OR SHIELD STRIP WIRE OR JACKET CIRCUIT POINT				TERMINATION SPEC	ITEM NO.	TO CUT WIRE OR SHIELD STRIP WIRE OR JACKET CIRCUIT POINT				TERMINATION SPEC	ITEM NO.
A 2L	3	P2-H*	22N		26			P3- 68	22N		22		
A 2R	3	P2-J*	22N		26			P3- 93	22N		22		
A 8	3		23G	20G	9	10	5		23G	20G	9	12	5
					A	11							
A 9A	3	SHLD A3	37N					E1	37N				
A 9R	3	P2-K*	22N		26			P3- 90	22N		22		
A 4	3		23G	20G	9	10	5		23G	20G	9	12	7A
					A	11							
A 4A	3	SHLD A4	37N					E1	37N				
A 4R	3	P2-M*	22N		26			P3-108	22N		22		
A 5	3	P2-N*	22N		26			P3- 78	22N		22		
A 6	3	P2-P*	22N		26			P3- 4	22N		22		
A 7	3	P2-Q*	22N		26			P3- 57	22N		22		
A 8	3	P2-R*	22N		26			P3- 12	22N		22		
A 9	3	P2-S*	22N		26			P3- 7	22N		22		
A 10	3	P2-T*	22N		26			P3- 55	22N		22		
A 11	3	P2-U*	22N		26			P3- 65	22N		22		
A 12	3	P2-V*	22N		26			P3- 63	22N		22		

THE STD CONDUCTOR TERMINATION FIGURES ARE PER

DIMENSIONS ARE IN INCHES AND TWO PLACE DECIMALS.

MANNED SPACECRAFT CENTER HOUSTON, TEXAS | SIZE A | 1900986

SCALE-NONE | REV LTR A | SHEET 7 OF 15

CONDUCTOR INDIVIDUAL LENGTH MARKER	ITEM NO.	FROM CUT WIRE OR SHIELD STRIP WIRE OR JACKET CIRCUIT POINT				TERMINATION SPEC	ITEM NO.	TO CUT WIRE OR SHIELD STRIP WIRE OR JACKET CIRCUIT POINT				TERMINATION SPEC	ITEM NO.
A 13A	3	SHLD A13	37N					E1	37N				
A 13L		P2-X*	22N		26			P3- 97	22N		22		
A 13R		P2-W*	22N		26			P3- 96	22N		22		
A 14	1		23G	20G	9	10	5		23G	20G	A	11	7A
					A	11							
A 14A	3	SHLD A14	37N					E1	37N				
A 14L		P2-Z*	22N		26			P3- 11	22N		22		
A 14R		P2-Y*	22N		26			P3- 10	22N		22		
A 15	1		23G	20G	9	10	5		23G	20G	A	11	7A
					A	11							
A 15A	3	SHLD A15	37N					E1	37N				
A 15L		P2-GC	22N		26			P3- 71	22N		22		
A 15R		P2-BB	22N		26			P3- 70	22N		22		
A 16	1		23G	20G	9	10	5		23G	20G	A	11	5
					A	11							
A 16A	3	SHLD A16	37N					E1	37N				

THE STD CONDUCTOR TERMINATION FIGURES ARE PER

DIMENSIONS ARE IN INCHES AND TWO PLACE DECIMALS.

MANNED SPACECRAFT CENTER HOUSTON, TEXAS | SIZE A | 1900986

SCALE-NONE | REV LTR A | SHEET 8 OF 15

CONDUCTOR INDIVIDUAL LENGTH MARKER	ITEM NO.	FROM CUT WIRE OR SHIELD STRIP WIRE OR JACKET CIRCUIT POINT				TERMINATION SPEC	ITEM NO.	TO CUT WIRE OR SHIELD STRIP WIRE OR JACKET CIRCUIT POINT				TERMINATION SPEC	ITEM NO.
A 16L		P2-EE	22N		26			P3- 85	22N		22		
A 16R		P2-DD	22N		26			P3- 82	22N		22		
A 17	2		23G	20G	9	10	5		23G	20G	A	12	5
					A	11							
A 17A	3	SHLD A17	37N					E1	37N				
A 17R		P2-FF	22N		26			P3- 76	22N		22		
A 18	3	P2-GG	22N		26			P3- 69	22N		22		
A 19	3	P2-B	22N		26			E1	22N				
A 20	3	P4- 1	22N		27			P3- 84	22N		22		
A 21	1		23G	20G	9	10	5		23G	20G	A	11	5
					A	11							
A 21A	3	SHLD A21	37N					E2	37N				
A 21L		P1-N	22N		23			P3- 28	22N		22		
A 21R		P1-M	22N		23			P3- 29	22N		22		
A 22	1		23G	20G	9	10	5		23G	20G	A	11	7A
					A	11							
A 22A	3	SHLD A22	37N					E2	37N				
A 22L		P1-R	22N		23			P3- 2	22N		22		

THE STD CONDUCTOR TERMINATION FIGURES ARE PER

DIMENSIONS ARE IN INCHES AND TWO PLACE DECIMALS.

MANNED SPACECRAFT CENTER HOUSTON, TEXAS | SIZE A | 1900986

SCALE-NONE | REV LTR B | SHEET 9 OF 15

CONDUCTOR INDIVIDUAL LENGTH NUMBER	ITEM NO.	FROM CUT WIRE OR SHIELD STRIP WIRE OR JACKET CIRCUIT POINT			TERMINATION SPEC		NO.	TO CUT WIRE OR SHIELD STRIP WIRE OR JACKET CIRCUIT POINT			TERMINATION SPEC		NO.
A 22R		P1-P	22M		23			P3- 1	22M		22		
A 23	1		23C	20C	9 10	5			23C	20C	A 11	7A	
					A 11								
A 23A	3	SHLD A23	37M					E2	37M				
A 23L		P1-T	22M		23			P3- 15	22M		22		
A 23R		P1-S	22M		23			P3- 14	22M		22		
A 24	3	P1-U	22M		23			P3- 9	22M		22		
A 25	3	P1-V	22M		23			P3- 25	22M		22		
A 26	3	P1-W	22M		23			P3- 79	22M		22		
A 27	2		25C	20C	7 8	6			23C	20C	A 12	7A	
					A 11								
A 27A	3	SHLD A27	37M					E2	37M				
A 27W		P1-X	22M		23			P3- 88	22M		22		
A 28	3	P1-Y	22M		23			P3- 46	22M		22		
A 29	3	P1-A*	22M		23			P3- 13	22M		22		
A 30	3	P1-B*	22M		23			P3- 6	22M		22		
A 31	3	P1-C*	22M		23			P3- 34*	22M		22		
A 32	3	P1-Z	22M		23			P3- 16	22M		22		

1. THE STD CONDUCTOR TERMINATION FIGURES ARE PER
2. DIMENSIONS ARE IN INCHES AND TWO PLACE DECIMALS.

MANNED SPACECRAFT CENTER HOUSTON, TEXAS | SIZE A | 1900986
SCALE - NONE | REV LTR A | SHEET 10 OF 15

CONDUCTOR INDIVIDUAL LENGTH NUMBER	ITEM NO.	FROM CUT WIRE OR SHIELD STRIP WIRE OR JACKET CIRCUIT POINT			TERMINATION SPEC		NO.	TO CUT WIRE OR SHIELD STRIP WIRE OR JACKET CIRCUIT POINT			TERMINATION SPEC		NO.
A 33	2		28C	25C	7 8	5			28C	25C	A 12	7A	
					A 11								
A 33A	3	SHLD A33	37M					E2	37M				
A 33W		P1-D*	22M		23			P3- 49	22M		22		
A 34	2		28C	25C	7 8	5			28C	25C	A 12	7A	
					A 11								
A 34A	3	SHLD A34	37M					E2	37M				
A 34W		P1-F*	22M		23			P3-104	22M		22		
A 35	3	P1-G*	22M		23			P3- 56	22M		22		
A 36	2		28C	25C	7 8	5			28C	25C	A 12	7A	
					A 11								
A 36A	3	SHLD A36	37M					E3	37M				
A 36W		P1-H*	22M		23			P3- 92	22M		22		
A 37	3	P1-1*	22M		23			P3- 35	22M		22		
A 38	3	P1-J*	22M		23			P3- 36	22M		22		
A 39	2		28C	25C	7 8	5			28C	25C	A 12	7A	
					A 11								
A 39A	3	SHLD A39	37M					E3	37M				

1. THE STD CONDUCTOR TERMINATION FIGURES ARE PER
2. DIMENSIONS ARE IN INCHES AND TWO PLACE DECIMALS.

MANNED SPACECRAFT CENTER HOUSTON, TEXAS | SIZE A | 1900986
SCALE - NONE | REV LTR A | SHEET 11 OF 15

CONDUCTOR INDIVIDUAL LENGTH NUMBER	ITEM NO.	FROM CUT WIRE OR SHIELD STRIP WIRE OR JACKET CIRCUIT POINT			TERMINATION SPEC		NO.	TO CUT WIRE OR SHIELD STRIP WIRE OR JACKET CIRCUIT POINT			TERMINATION SPEC		NO.
A 39W	3	P1-M*	22M		23			P3-105	22M		22		
A 40	3	P1-N*	22M		23			P3- 37	22M		22		
A 41	3	P1-O*	22M		23			P3- 23	22M		22		
A 42	2		33C	30C	7 8	5			33C	30C	A 12	7A	
					A 11								
A 42A	3	SHLD A42	37M					E3	37				
A 42W		P1-P*	22M		23			P3- [illegible]	22		22		
A 43	2		33C	30C	7 8	5			33C	30C	A 12	7A	
					A 11								
A 43A	3	SHLD A43	37M					E3	37M				
A 43W		P1-Q*	22M		23			P3- 22	22M		22		
A 44	3	P1-R*	22M		23			P3- 24	22M		22		
A 45	2		33C	30C	9 10	5			33C	30C	A 11	7A	
					A 11								
A 45A	3	SHLD A45	37M					E3	37M				
A 45L		P1-T*	22M		23			P3- 80	22M		22		
A 45R		P1-S*	22M		23			P3- 95	22M		22		
A 46	3	P1-U*	22M		23			P3- 58	22M		22		

1. THE STD CONDUCTOR TERMINATION FIGURES ARE PER
2. DIMENSIONS ARE IN INCHES AND TWO PLACE DECIMALS.

MANNED SPACECRAFT CENTER HOUSTON, TEXAS | SIZE A | 1900986
SCALE - NONE | REV LTR A | SHEET 12 OF 15

CONDUCTOR INDIVIDUAL LENGTH NUMBER	ITEM NO.	FROM CUT WIRE OR SHIELD STRIP WIRE OR JACKET CIRCUIT POINT			TERMINATION SPEC		NO.	TO CUT WIRE OR SHIELD STRIP WIRE OR JACKET CIRCUIT POINT			TERMINATION SPEC		NO.
A 47	2		33C	30C	7 8	5			33C	30C	A 12	7A	
					A 11								
A 47A	3	SHLD A47	37M					E3	37M				
A 47W		P1-V*	22M		23			P3-108	22M		22		
A 48	2		38C	35C	7 8	5			38C	35C	A 12	7A	
					A 11								
A 48A	3	SHLD A48	37M					E4	37M				
A 48W		P1-W*	22M		23			P3-103	22M		22		
A 49	2		38C	35C	7 8	5			38C	35C	A 12	7A	
					A 11								
A 49A	3	SHLD A49	37M					E4	37M				
A 49W		P1-X*	22M		23			P3- 39	22M		22		
A 50	3	P1-Y*	22M		23			P3- 40	22M		22		
A 51	3	P1-Z*	22M		23			P3- 38	22M		22		
A 52	2		38C	35C	7 8	5			38C	35C	A 12	7A	
					A 11								
A 52A	3	SHLD A52	37M					E4	37M				
A 52W		P1-AA	22M		23			P3- 59	22M		22		

1. THE STD CONDUCTOR TERMINATION FIGURES ARE PER
2. DIMENSIONS ARE IN INCHES AND TWO PLACE DECIMALS.

MANNED SPACECRAFT CENTER HOUSTON, TEXAS | SIZE A | 1900986
SCALE - NONE | REV LTR A | SHEET 13 OF 15

61J CABLE W-54 A 1900986

CONDUCTOR INDIVIDUAL LENGTH NUMBER	ITEM NO.	3	FROM CIT WIRE OR SHIELD STRIP WIRE OR JACKET CIRCUIT POINT	3	T I N	2	TERMINATION SPEC	1	ITEM NO.	NO.	TO CIT WIRE OR SHIELD STRIP WIRE OR JACKET CIRCUIT POINT	3	T I N	2	TERMINATION SPEC	1	ITEM NO.	NO.
A 53	2			38Q		35Q	7	E	5			38Q		35Q	A 12		7A	
							A 12											
A 53A	3		SHLD A53	37N							E4	37N						
A 53W			P1-BB	22N		23					P3- 91	22N		22				
A 54	3		P1-CC	22N		23					P3- 47	22N		22				
A 55	3		P1-DD	22N		23					P3- 69	22N		22				
A 56	3		P1-EE	22N		23					P3- 5	22N		22				
A 57	3		P1-FF	22N		23					P3- 27	22N		22				
A 58	2			43Q		40Q	7	E	5			43Q		40Q	A 12		7A	
							A 12											
A 58A	3		SHLD A58	37N							E4	37N						
A 58W			P1-GG	22N		23					P3- 26	22N		22				
A 59	3		P1-B	22N		23					E2	37N						
A 60	3		E2	37N							E3	37N						
A 61	3		E3	37N							E4	37N						

1 THE STD CONDUCTOR TERMINATION FIGURES ARE PSR

2 DIMENSIONS ARE IN INCHES AND TWO PLACE DECIMALS.

MARSHALL SPACECRAFT CENTER HOUSTON, TEXAS

SIZE A 1900986

SCALE - NONE REV LTR A SHEET 14 OF 15

1900986

REVISIONS					
SYM	ZONE	DESCRIPTION	CHG NO.	DATE	APPD.
		SEE SHEET 1 FOR REVISION RECORD			

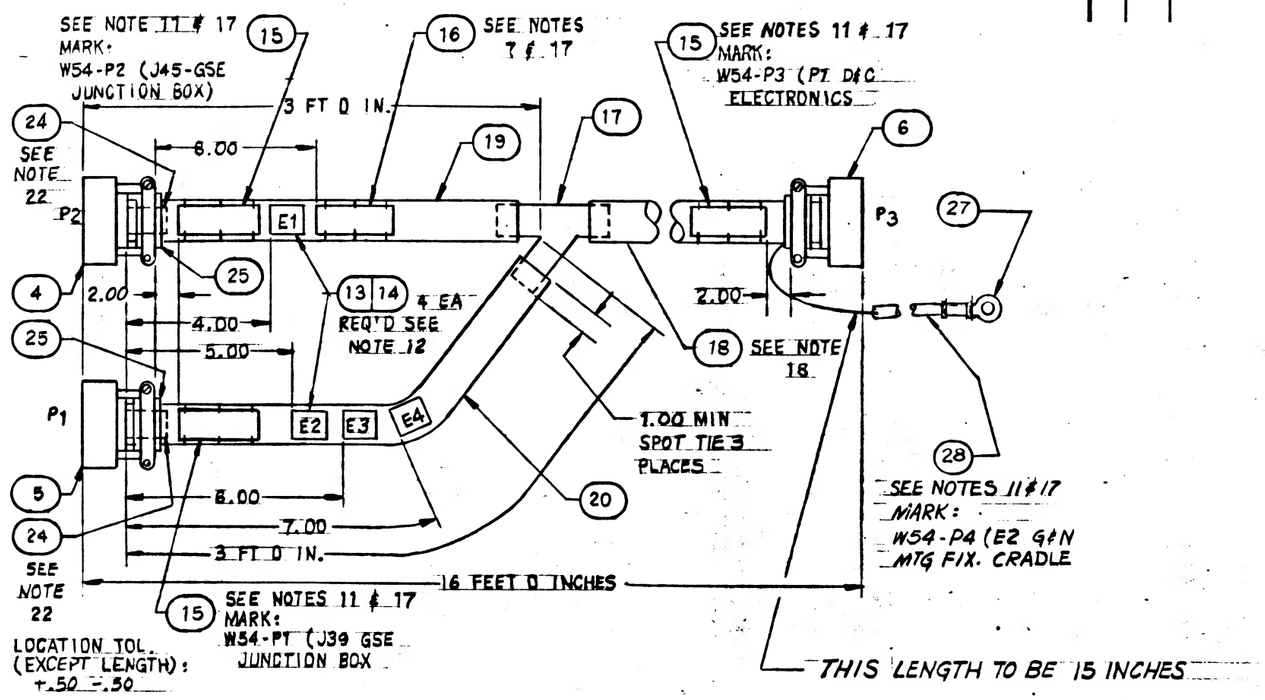

NEXT ASSY	USED ON
APPLICATION	

UNLESS OTHERWISE SPECIFIED
DIMENSIONS ARE IN INCHES
TOLERANCES ON

FRACTIONS	DECIMALS	ANGLES
+	+	+
−	−	−

DO NOT SCALE THIS DRAWING

MATERIAL

CONTRACT NAS9-497

AC SPARK PLUG DIVISION, GMC
MILWAUKEE, WISCONSIN
ACSP PN

DRAWN KOSMATHA DATE 7 NOV 63
CHECKED MANNING 11 NOV. 63
APPROVAL LIGON 13 NOV 63
APPROVAL

NASA APPROVAL

MIT APPROVAL

MANNED SPACECRAFT CENTER
HOUSTON, TEXAS

CABLE INTERCONNECT W54
ISS TESTING

CODE IDENT NO. | SIZE C | 1900986

SCALE - NONE | SHEET 15 OF 15

MIL 1077C—P

1900986

APPLICATION		REVISIONS			
NEXT ASSY	USED ON	SYM	DESCRIPTION	DATE	APPROVAL
1901308	1900005-011	A	CHANGE IN ACCORDANCE WITH CM-193766 TDR 09103	18 FEB 64	J.B. P7
		B	CHANGE IN ACCORDANCE WITH CM-197536 REVISED CUSTOMER DATA (V2-64) TDR 12002	27 MAY 64	BK P7
		C	CHANGE IN ACCORDANCE WITH CM 197757 12102	9 JUL 64	HTO P7

FOR INFORMATION ONLY

CLASS B RELEASE TDR No. 05663 **DATE** 1/7/64

REV																	
SHEET																	
REV STATUS OF SHEETS	REV	C	C	C	C	C	C	C	C	C	C	C	C	C	C	C	C
	SHEET	1	2	3	4	5	6	7	8	9	10	11	12	13	14	15	16

AC SPARK PLUG DIVISION, GMC
MILWAUKEE, WISCONSIN

ACSP PN

DRAWN T. Kamatta DATE 7 NOV 63
CHECKED 11 NOV 63
APPROVAL 13 NOV 63
APPROVAL L. Johnson 1/3/64

MANNED
SPACECRAFT CENTER
HOUSTON, TEXAS

CABLE INTERCONNECT W54
ISS TESTING

NASA APPROVAL
MIT APPROVAL

CODE IDENT NO.	SIZE		REV
	A	1900986	C

CONTRACT NAS9-497 SCALE SHEET 1 OF 16

PENNANT NOTE	GENERAL NOTES
1	SEE CONDUCTOR CHART. PENNANT NOTE 1.
2	SEE CONDUCTOR CHART. PENNANT NOTE 2.
3	INTERPRET DRAWING IN ACCORDANCE WITH STANDARDS PRESCRIBED BY MIL-D-70327.
4	MARK CONDUCTOR IDENTIFICATION ON SINGLE CONDUCTORS PER ND1002019 OMITTING ALL SUFFIX LETTERS EXCEPT A AND B.
5	SPACING OF CONDUCTOR IDENTIFICATION SHALL BE EVERY 15 INCHES MAX. AND AT EACH TERMINATION.
6	SPIRALLING OF THE MARKING IS ALLOWED.
7	IDENTIFY USING DRAWING NO. AND REVISION LETTER PER MIL-STD-130 (ES-267). .12 INCH HIGH CHARACTERS WHITE.
8	Y OR N IN TINNED COLUMN INDICATES YES OR NO.
9	A LETTER WITH AN ASTERISK SUFFIX. INDICATES A LOWER CASE LETTER.
10	VENDOR ITEM - SEE SPECIFICATION CONTROL DRAWING.
11	MARK IDENTIFICATION BAND WITH REFERENCE DESIGNATION AS NOTED .12 INCH HIGH COLOR WHITE. HOT IMPRESSION STAMPING PER ND1002019. CENTRALIZE.
12	MARK SLEEVING WITH REFERENCE DESIGNATIONS AS SHOWN .12 INCH HIGH. COLOR BLACK PER ND1002019.
13	MARK SLEEVING OF MULTI-CONDUCTORS WITH THE CONDUCTOR NUMBER .12 INCH HIGH. COLOR BLACK. PER ND1002019 WHEN SLEEVING ITEM NUMBERS FOLLOW AN A OR T IN THE ACCESSORIES ITEM NUMBER FIELD.

MANNED SPACECRAFT CENTER HOUSTON, TEXAS | SIZE A | 1900986
SCALE - NONE | REV LTR C | SHEET 2 OF 16

PENNANT NOTE	GENERAL NOTES
14	A OR T PREFIX IN THE ACCESSORIES ITEM NUMBER COLUMN INDICATES THE READING POSITION AWAY FROM TERMINATION OR TOWARD TERMINATION RESPECTIVELY. OF THE WIRE MARKER SLEEVE.
15	THE SUFFIX LETTER OF A CONDUCTOR IDENTIFICATION NUMBER INDICATES CONDUCTOR SHIELDING. COLOR. OR MARKING. A - FROM END SHIELD L - WHITE WITH BLUE TRACER R - WHITE WITH RED TRACER W - WHITE
16	ASSEMBLE CONTACTS IN ALL CONNECTOR GROMMET HOLES.
17	SECURE TO CABLE USING ITEM 21. MARKING TO READ AWAY FROM CONNECTOR.
18	SEAL ZIPPER TUBING PER ND1002153.
19	SERIALIZE PER ND1002023.
20	ITEM 23 FURNISHED WITH ITEM 5.
21	ITEM 26 FURNISHED WITH ITEM 4.
22	ITEM 24 SHALL BE SHORTENED WHEN NECESSARY TO AVOID INTERFERENCE WITH FERRULES AND MAY BE CUT LENGTHWISE ON ONE SIDE. SELECT ONE OR MORE OF ITEM 24 AS REQUIRED TO FIT.

MANNED SPACECRAFT CENTER HOUSTON, TEXAS | SIZE A | 1900986
SCALE - NONE | REV LTR C | SHEET 3 OF 16

PENNANT NOTE — GENERAL NOTES

TOLERANCE CHART. UNLESS OTHERWISE SPECIFIED ---

APPLICABLE LENGTH FOR WIRE OR CABLE. STRIP WIRE. STRIP JACKET. CUT WIRE OR CUT SHIELD.	TOLERANCE WIRE OR CABLE	WIRE	STRIP JACKET	WIRE	CUT SHIELD
UNDER 1 INCH	+.06-.00	+.03-.00	+.06-.06	+.06-.06	+.06-.06
1 INCH TO 6 INCHES	+.50-.00	+.06-.00	+.25-.25	+.25-.25	+.25-.25
6 INCHES TO 6 FEET	+1.00-.00		+.50-.50	+.50-.50	+.50-.50
OVER 6 FEET	+2.00-.00				

MANNED SPACECRAFT CENTER HOUSTON, TEXAS | SIZE A | 1900986
SCALE - NONE | REV LTR C | SHEET 4 OF 16

PENNANT NOTE — LIST OF MATERIALS

NOTE	ITEM	QTY	PART NO	DESCRIPTION	CLASS CODE
	1	1	1900986-001	WIRE ND1002181 TYPE 2. CLASS 4. WHT JACKET 22AWG WHT/BLU. WHT/RED 128 FT TOTAL LENGTH	
	2	1	1900986-002	WIRE ND1002181 TYPE 1. CLASS 4. WHT JACKET 22AWG WHT. 256 FT TOTAL LENGTH	
	3	1	1900986-003	WIRE ND1002181 TYPE 1. CLASS 1. 22AWG. WHT 528 FT TOTAL LENGTH	
	4	1	MS3126F22-55SW (1897046-551)	CONNECTOR PLUG	
	5	1	MS3126F22-55PX (1897045-552)	CONNECTOR PLUG	
16, 10	6	1	1010607-001	CONNECTOR-PLUG	
10	7	13	1000243-003	FERRULE. ELEC COND	
10	8	13	1000242-002	FERRULE. ELEC COND	
10	9	7	1000243-008	FERRULE. ELEC COND	
10	10	7	1000242-007	FERRULE. ELEC COND	
10	11	27	1010490-198	INSULATION-SLEEVING ELEC	
10	12	13	1010490-200	INSULATION-SLEEVING ELEC	
10	13	5	1010490-258	INSULATION-SLEEVING ELEC	
10	14	5	1016006-002	SPLICE REDUCER	
10	15	3	1016128-041	BAND-IDENTIFICATION	
10	16	1	1016128-011	BAND-IDENTIFICATION	
10	17	1	1016184-002	TRANSITION-HARNESS. 2 FINGER (Y)	

MANNED SPACECRAFT CENTER HOUSTON, TEXAS | SIZE A | 1900986
SCALE - NONE | REV LTR C | SHEET 5 OF 16

PENNANT LIST OF MATERIALS

NOTE	ITEM	QTY	PART NO	DESCRIPTION	CLASS CODE
	18	1	1900986-004	ZIPPER TUBING ND1002155, TYPE 1, PLASTIC, FLEXIBLE 1 INCH DIA 13 FT TOTAL LENGTH	
	19	1	1900986-005	ZIPPER TUBING ND1002155, TYPE 1, PLASTIC, FLEXIBLE 3/4 DIA 4 FT TOTAL LENGTH	
	20	1	1900986-006	ZIPPER TUBING ND1002155, TYPE 1, PLASTIC, FLEXIBLE 7/8 DIA 4 FT TOTAL LENGTH	
	21	AR	MIL-T-713	LACING TAPE TYPE B, CLASS 2, BLACK (ES-2732 NO. 18)	
18	22	109	1010464-002	CONTACT SOCKET	
20	23			CONTACT, PINS	
22	24	AR	1897147-104,	106, 108, 112, CABLE CLAMP SLEEVE	
10	25	2	1016282-022	RUBBER GROMMET	
21	26			CONTACT, SOCKET	
10	27	1	1015902- 66	TERMINAL LUG	
	28	8	1900986-007	TUBING MODIFIED POLYVINYL CHLORIDE, FLEXIBLE SHRINK-FIT PER 1016197-006, 6 INCHES TOT. LGTH.	
	29	1	MS-24056-2	CONNECTOR	
	30	1	MS-24018-1	CONNECTOR, HOOD	

MANNED SPACECRAFT CENTER HOUSTON, TEXAS	SIZE A	1900986
SCALE - NONE	REV LTR C	SHEET 6 OF 16

CONDUCTOR NUMBER	ITEM NO.	FROM CUT WIRE OR SHIELD STRIP WIRE OR JACKET CIRCUIT POINT		TERMINATION SPEC.	ITEM NO.	TO CUT WIRE OR SHIELD STRIP WIRE OR JACKET CIRCUIT POINT		TERMINATION SPEC.	ITEM NO.
A 1	3	P2-H*	22N	26		P3- 68	22N	22	
A 2	3	P2-J*	22N	26		P3- 93		22	
A 3		DELETED							
		DELETED							
A 3A		DELETED							
A 3W		DELETED							
A 4		DELETED							
		DELETED							
A 4A		DELETED							
A 4W		DELETED							
A 5	3	P2-N*	22N	26		P3- 78	22N	22	
A 6	3	P2-P*	22N	26		P3- 4	22N	22	
A 7	3	P2-Q*	22N	26		P3- 57	22N	22	
A 8	3	P2-R*	22N	26		P3- 12	22N	22	
A 9	3	P2-S*	22N	26		P3- 7	22N	22	
A 10	3	P2-T*	22N	26		P3- 55	22N	22	
A 11	3	P2-U*	22N	26		P3- 45	22N	22	
A 12	3	P2-V*	22N	26		P3- 65	22N	22	

1 > THE STD CONDUCTOR TERMINATION FIGURES ARE PER
2 > DIMENSIONS ARE IN INCHES AND TWO PLACE DECIMALS.

MANNED SPACECRAFT CENTER HOUSTON, TEXAS	SIZE A	1900986
SCALE - NONE	REV LTR C	SHEET 7 OF 16

CONDUCTOR NUMBER	ITEM NO.	FROM CUT WIRE OR SHIELD STRIP WIRE OR JACKET CIRCUIT POINT		TERMINATION SPEC.	ITEM NO.	TO CUT WIRE OR SHIELD STRIP WIRE OR JACKET CIRCUIT POINT		TERMINATION SPEC.	ITEM NO.
A 13	1		230 200	9 10	5		230 200	A 11	7A
				A 11					
A 13A	3	SHLD A13	37N			E1	37N		
A 13L		P2-X*	22N	26		P3- 97	22N	22	
A 13R		P2-X*	22N	26		P3- 96	22N	22	
A 14	1		230 200	9 10	5		230 200	A 11	7A
				A 11					
A 14A	3	SHLD A14	37N			E1	37N		
A 14L		P2-Z*	22N	26		P3- 11	22N	22	
A 14R		P2-Y*	22N	26		P3- 10	22N	22	
A 15	1		280 250	9 10	5		230 200	A 11	7A
				A 11					
A 15A	3	SHLD A15	37N			E1	37N		
A 15L		P2-CC	22N	26		P3- 71	22N	22	
A 15R		P2-BB	22N	26		P3- 70	22N	22	
A 16	1		280 250	9 10	5		280 250	A 11	5
				A 11					
A 16A	3	SHLD A16	37N			E1	37N		

1 > THE STD CONDUCTOR TERMINATION FIGURES ARE PER
2 > DIMENSIONS ARE IN INCHES AND TWO PLACE DECIMALS.

MANNED SPACECRAFT CENTER HOUSTON, TEXAS	SIZE A	1900986
SCALE - NONE	REV LTR C	SHEET 8 OF 16

CONDUCTOR NUMBER	ITEM NO.	FROM CUT WIRE OR SHIELD STRIP WIRE OR JACKET CIRCUIT POINT		TERMINATION SPEC.	ITEM NO.	TO CUT WIRE OR SHIELD STRIP WIRE OR JACKET CIRCUIT POINT		TERMINATION SPEC.	ITEM NO.
A 16L		P2-EE	22N	26		P3- 83	22N	22	
A 16R		P2-DD	22N	26		P3- 82	22N	22	
A 17	2		280 250	7 8	5		280 250	A 12	5
				A 11					
A 17A	3	SHLD A17	37N			E1	37N		
A 17W		P2-FF	22N	26		P3- 76	22N	22	
A 18	3	P2-GG	22N	26		P3- 89	22N	22	
A 19	3	P2-B	22N	26		E1	22N		
A 20	3	P4- 1	25N	23		P3- 84	22N	22	
A 21	1		230 200	9 10	5		230 200	A 11	5
				A 11					
A 21A	3	SHLD A21	37N			E2	37N		
A 21L		P1-N	22N	23		P3- 28	22N	22	
A 21R		P1-M	22N	23		P3- 29	22N	22	
A 22	1		230 200	9 10	5		230 200	A 11	7A
				A 11					
A 22A	3	SHLD A22	37N			E2	37N		
A 22L		P1-R	22N	23		P3- 2	22N	22	

1 > THE STD CONDUCTOR TERMINATION FIGURES ARE PER
2 > DIMENSIONS ARE IN INCHES AND TWO PLACE DECIMALS.

MANNED SPACECRAFT CENTER HOUSTON, TEXAS	SIZE A	1900986
SCALE - NONE	REV LTR C	SHEET 9 OF 16

GIJ CABLE W-54 C 1900986

CONDUCTOR INDIVIDUAL LENGTH NUMBER	ITEM NO.	2	FROM CUT WIRE OR SHIELD STRIP WIRE OR JACKET CIRCUIT POINT	2	T 1	3	TERMINATION SPEC. 1		NO.	TO CUT WIRE OR SHIELD STRIP WIRE OR JACKET CIRCUIT POINT	2	T 1	3	TERMINATION SPEC 1		NO
A 22R			P1-P	22N		23				P3- 1	22N		22			
A 23	1			230	200	9	10	5			230	200	A 11		7A	
						A	11									
A 23A	3		SHLD A23	37N						E2	37N					
A 23L			P1-T	22N		23				P3- 15	22N		22			
A 23R			P1-S	22N		23				P3- 14	22N		22			
A 24	3		P1-U	22N		23				P3- 9	22N		22			
A 25	3		P1-V	22N		23				P3- 25	22N		22			
A 26	3		P1-W	22N		23				P3- 79	22N		22			
A 27	2			230	200	7	8	5			230	200	A 12		7A	
						A	11									
A 27A	3		SHLD A27	37N						E2	37N					
A 27W			P1-X	22N		23				P3- 88	22N		22			
A 28	3		P1-Y	22N		23				P3- 46	22N		22			
A 29	3		P1-A*	22N		23				P3- 13	22N		22			
A 30	3		P1-B*	22N		23				P3- 6	22N		22			
A 31	3		P1-C*	22N		23				P3- 34	22N		22			
A 32	3		P1-Z	22N		23				P3- 18	22N		22			

1> THE STD CONDUCTOR TERMINATION FIGURES ARE PER
2> DIMENSIONS ARE IN INCHES AND TWO PLACE DECIMALS.

MANNED SPACECRAFT CENTER HOUSTON, TEXAS | SIZE A | 1900986
SCALE-NONE | REV LTR C | SHEET 10 OF 16

GIJ CABLE W-54 C 1900986

CONDUCTOR INDIVIDUAL LENGTH NUMBER	ITEM NO.	2	FROM CUT WIRE OR SHIELD STRIP WIRE OR JACKET CIRCUIT POINT	2	T 1	3	TERMINATION SPEC. 1		NO.	TO CUT WIRE OR SHIELD STRIP WIRE OR JACKET CIRCUIT POINT	2	T 1	3	TERMINATION SPEC 1		NO
A 33	2			280	250	7	8	5			280	250	A 12		7A	
						A	11									
A 33A	3		SHLD A33	37N						E2	37N					
A 33W			P1-D*	22N		23				P3- 49	22N		22			
A 34	2			280	250	7	8	5			280	250	A 12		7A	
						A	11									
A 34A	3		SHLD A34	37N						E2	37N					
A 34W			P1-E*	22N		23				P3-104	22N		22			
A 35	3		P1-G*	22N		23				P3- 56	22N		22			
A 36	2			280	250	7	8	5			280	250	A 12		7A	
						A	11									
A 36A	3		SHLD A36	37N						E3	37N					
A 36W			P1-H*	22N		23				P3- 92	22N		22			
A 37	3		P1-I*	22N		23				P3- 35	22N		22			
A 38	3		P1-J*	22N		23				P3- 36	22N		22			
A 39	2			280	250	7	8	5			280	250	A 12		7A	
						A	11									
A 39A	3		SHLD A39	37N						E3	37N					

1> THE STD CONDUCTOR TERMINATION FIGURES ARE PER
2> DIMENSIONS ARE IN INCHES AND TWO PLACE DECIMALS.

MANNED SPACECRAFT CENTER HOUSTON, TEXAS | SIZE A | 1900986
SCALE-NONE | REV LTR C | SHEET 11 OF 16

GIJ CABLE W-54 C 1900986

CONDUCTOR INDIVIDUAL LENGTH NUMBER	ITEM NO.	2	FROM CUT WIRE OR SHIELD STRIP WIRE OR JACKET CIRCUIT POINT	2	T 1	3	TERMINATION SPEC. 1		NO.	TO CUT WIRE OR SHIELD STRIP WIRE OR JACKET CIRCUIT POINT	2	T 1	3	TERMINATION SPEC 1		NO
A 39W			P1-K*	22N		23				P3-105	22N		22			
A 40	3		P1-M*	22N		23				P3- 37	22N		22			
A 41	3		P1-N*	22N		23				P3- 23	22N		22			
A 42	2			330	300	7	8	5			330	300	A 12		7A	
						A	11									
A 42A	3		SHLD A42	37N						E3	37					
A 42W			P1-P*	22N		23				P3- 94	22		22			
A 43	2			330	300	7	8	5			330	300	A 12		7A	
						A	11									
A 43A	3		SHLD A43	37N						E3	37N					
A 43W			P1-Q*	22N		23				P3- 22	22N		22			
A 44	3		P1-R*	22N		23				P3- 24	22N		22			
A 45			DELETED													
			DELETED													
A 45A			DELETED													
A 45L			DELETED													
A 45R			DELETED													
A 46	3		P1-U*	22N		23				P3- 58	22N		22			

1> THE STD CONDUCTOR TERMINATION FIGURES ARE PER
2> DIMENSIONS ARE IN INCHES AND TWO PLACE DECIMALS.

MANNED SPACECRAFT CENTER HOUSTON, TEXAS | SIZE A | 1900986
SCALE-NONE | REV LTR C | SHEET 12 OF 16

GIJ CABLE W-54 C 1900986

CONDUCTOR INDIVIDUAL LENGTH NUMBER	ITEM NO.	2	FROM CUT WIRE OR SHIELD STRIP WIRE OR JACKET CIRCUIT POINT	2	T 1	3	TERMINATION SPEC. 1		NO.	TO CUT WIRE OR SHIELD STRIP WIRE OR JACKET CIRCUIT POINT	2	T 1	3	TERMINATION SPEC 1		NO
A 47	2			350	300	7	8	5			350	300	A 12		7A	
						A	11									
A 47A	3		SHLD A47	37N						E3	37N					
A 47W			P1-V*	22N		23				E5-37N	22N		22			
A 48	2			380	350	7	8	5			380	350	A 12		7A	
						A	11									
A 48A	3		SHLD A48	37N						E4	37N					
A 48W			P1-W*	22N		23				P3-103	22N		22			
A 49	2			380	350	7	8	5			380	350	A 12		7A	
						A	11									
A 49A	3		SHLD A49	37N						E4	37N					
A 49W			P1-X*	22N		23				P3- 39	22N		22			
A 50	3		P1-Y*	22N		23				P3- 48	22N		22			
A 51	3		P1-Z*	22N		23				P3- 38	22N		22			
A 52	2			380	350	7	8	5			380	350	A 12		7A	
						A	11									
A 52A	3		SHLD A52	37N						E4	37N					
A 52W			P1-AA	22N		23				P3- 59	22N		22			

1> THE STD CONDUCTOR TERMINATION FIGURES ARE PER
2> DIMENSIONS ARE IN INCHES AND TWO PLACE DECIMALS.

MANNED SPACECRAFT CENTER HOUSTON, TEXAS | SIZE A | 1900986
SCALE-NONE | REV LTR C | SHEET 13 OF 16

GIJ CABLE W-54 C 1900986

CONDUCTOR INDIVIDUAL LENGTH NUMBER	ITEM NO	2>	FROM CUT WIRE OR SHIELD STRIP WIRE OR JACKET CIRCUIT POINT	3	1>	2>	TERMINATION SPEC	ITEM NO	NO.	TO CUT WIRE OR SHIELD STRIP WIRE OR JACKET CIRCUIT POINT	3	1>	2>	TERMINATION SPEC	ITEM NO	NO
A 53			DELETED													
			DELETED													
A 53A			DELETED													
A 53W			DELETED													
A 54	3		P1-CC	22N		23				P3- 47	22N		22			
A 55	3		P1-DD	22N		23				P3- 69	22N		22			
A 56	3		P1-EE	22N		23				P3- 5	22N		22			
A 57	3		P1-FF	22N		23				P3- 27	22N		22			
A 58	2			430	400	7	A	5			430	400	A 12		7A	
							A 11									
A 58A	3		SHLD A58	37N						E4	37N					
A 58W			P1-GG	22N		23				P3- 26	22N		22			
A 59	3		P1-R	22N		23				E2	37N					
A 60	3		E2	37N						E3	37N					
A 61	3		E3	37N						E4	37N					
A 62	3		P3- 90	22N		22				P5-B	25Y					
A 63	3		P3-106	22N		22				P5-C	25Y					
A 64	3		P3-108	22N		22				E5	37N					

1> THE STD CONDUCTOR TERMINATION FIGURES ARE PER
2> DIMENSIONS ARE IN INCHES AND TWO PLACE DECIMALS.

MANNED SPACECRAFT CENTER HOUSTON, TEXAS | SIZE A | 1900986
SCALE - NONE | REV LTR C | SHEET 14 OF 16

GIJ CABLE W-54 C 1900986

CONDUCTOR INDIVIDUAL LENGTH NUMBER	ITEM NO	2>	FROM CUT WIRE OR SHIELD STRIP WIRE OR JACKET CIRCUIT POINT	3	1>	2>	TERMINATION SPEC	ITEM NO	NO.	TO CUT WIRE OR SHIELD STRIP WIRE OR JACKET CIRCUIT POINT	3	1>	2>	TERMINATION SPEC	ITEM NO	NO
A 65	3		P3- 91	22N		22				P5-D	25Y					
A 66	3		P3- 80	22N		22				P5-E	25Y					
A 67	3		P3- 95	22N		22				P5-F	25Y					
A 68	3		P1-T*	22N		23				E5	37N					

1> THE STD CONDUCTOR TERMINATION FIGURES ARE PER
2> DIMENSIONS ARE IN INCHES AND TWO PLACE DECIMALS.

MANNED SPACECRAFT CENTER HOUSTON, TEXAS | SIZE A | 1900986
SCALE - NONE | REV LTR C | SHEET 15 OF 16

REVISIONS					
SYM	ZONE	DESCRIPTION	CHG NO.	DATE	APPD.
		SEE SHEET 1 FOR REVISION RECORD			

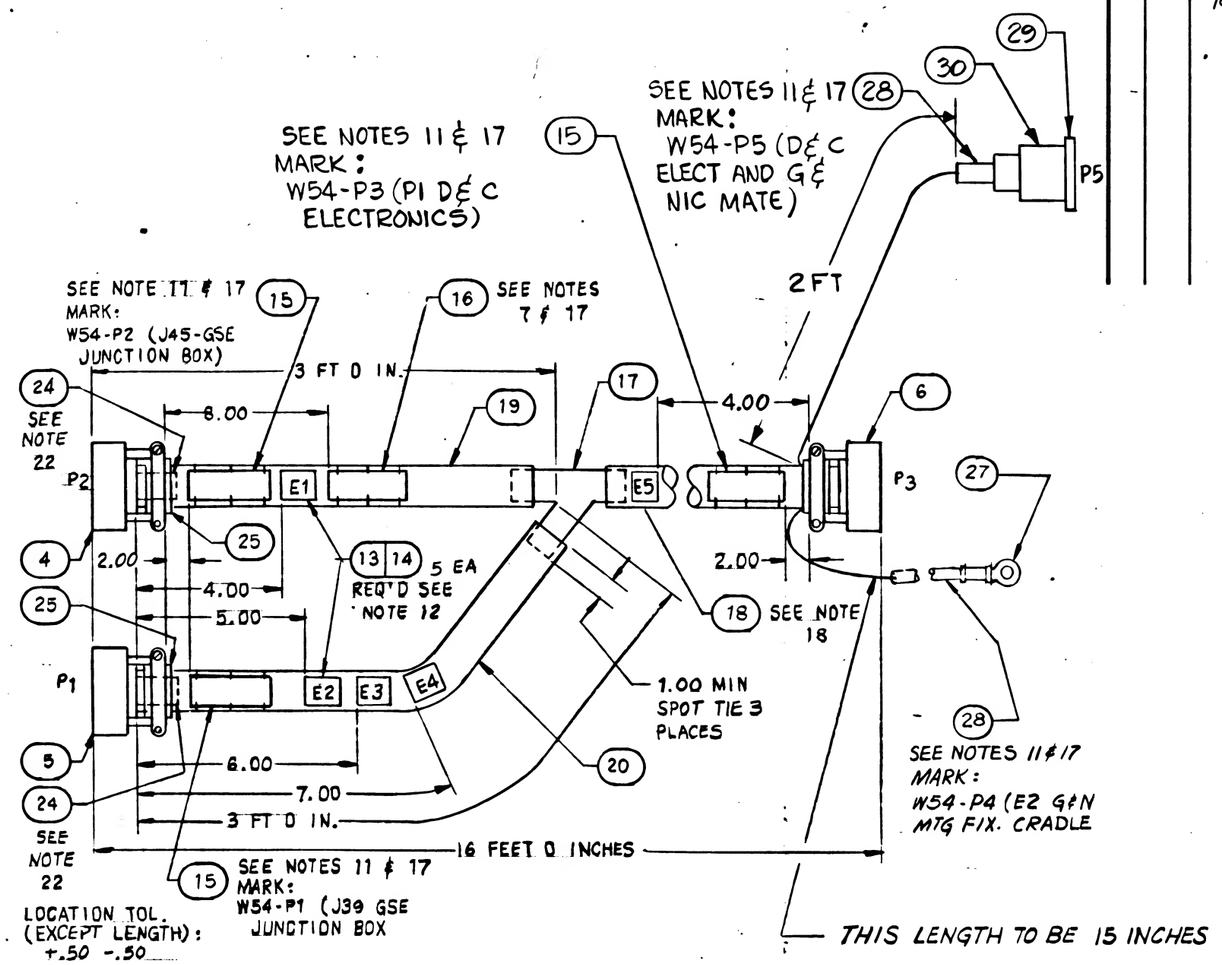

NEXT ASSY	USED ON	UNLESS OTHERWISE SPECIFIED DIMENSIONS ARE IN INCHES TOLERANCES ON FRACTIONS ± DECIMALS ± ANGLES ±	AC SPARK PLUG DIVISION, GMC MILWAUKEE, WISCONSIN	MANNED SPACECRAFT CENTER HOUSTON, TEXAS
APPLICATION		DO NOT SCALE THIS DRAWING	ACSP PN	
			DRAWN KOSMATKA DATE 7 NOV 63	CABLE INTERCONNECT W54 ISS TESTING
			CHECKED MANNING 11 NOV. 63	
			APPROVAL LIGON 13 NOV. 63	
		MATERIAL	APPROVAL	CODE IDENT NO. / SIZE C / 1900986
			NASA APPROVAL	
		CONTRACT NAS9-497	MIT APPROVAL	SCALE - NONE / SHEET 16 OF 16

MIL 1077C-P

APPLICATION		REVISIONS			
NEXT ASSY	USED ON	SYM	DESCRIPTION	DATE	APPROVAL
1901308	1900005-011 (A)	A	CHANGE IN ACCORDANCE WITH CM-193766 TDRR 09103	18 FEB 64	J.B. P7
	(A)	B	CHANGE IN ACCORDANCE WITH CM-197536 TDRR 12602 REVISED CUSTOMER DATA (V2-G4)	27 MAY 64	BK P7
	(A)	C	CHANGE IN ACCORDANCE WITH CM 197757 TDRR 12102	9 JUL 64	NTO P7
		D	CHANGE IN ACCORDANCE WITH CM 199018 PER TDRR 12103	30 JUL 64	OME MEM

FOR INFORMATION ONLY

CLASS B RELEASE TDR No. 05663 DATE 1/7/65

REV																								
SHEET																								
REV STATUS	REV	D	C	D	C	D	D	C	C	C	C	C	C	C	C	C	C	D						
OF SHEETS	SHEET	1	2	3	4	5	6	7	8	9	10	11	12	13	14	15	16							

AC SPARK PLUG DIVISION, GMC MILWAUKEE, WISCONSIN	MANNED SPACECRAFT CENTER HOUSTON, TEXAS
ACSP PN	
DRAWN J. Kramer DATE 7 NOV. 63 CHECKED 11 NOV 63 APPROVAL LKOON 18 NOV 63 APPROVAL L. Yadinas 1/3/64	CABLE INTERCONNECT W54 ISS TESTING
NASA APPROVAL MIT APPROVAL	CODE IDENT NO. / SIZE A / 1900986 / REV D
CONTRACT NAS9-497	SCALE — / SHEET 1 OF 16

PENNANT NOTE — GENERAL NOTES

1. SEE CONDUCTOR CHART. PENNANT NOTE 1.
2. SEE CONDUCTOR CHART. PENNANT NOTE 2.
3. INTERPRET DRAWING IN ACCORDANCE WITH STANDARDS PRESCRIBED BY MIL-D-70327.
4. MARK CONDUCTOR IDENTIFICATION ON SINGLE CONDUCTORS PER ND1002019 OMITTING ALL SUFFIX LETTERS EXCEPT A AND B.
5. SPACING OF CONDUCTOR IDENTIFICATION SHALL BE EVERY 15 INCHES MAX. AND AT EACH TERMINATION.
6. SPIRALLING OF THE MARKING IS ALLOWED.
7. IDENTIFY USING DRAWING NO. AND REVISION LETTER PER MIL-STD-130 (ES-267). .12 INCH HIGH CHARACTERS WHITE.
8. Y OR N IN TINNED COLUMN INDICATES YES OR NO.
9. A LETTER WITH AN ASTERISK SUFFIX. INDICATES A LOWER CASE LETTER.
10. VENDOR ITEM - SEE SPECIFICATION CONTROL DRAWING.
11. MARK IDENTIFICATION BAND WITH REFERENCE DESIGNATION AS NOTED .12 INCH HIGH COLOR WHITE. HOT IMPRESSION STAMPING PER ND1002019. CENTRALIZE.
12. MARK SLEEVING WITH REFERENCE DESIGNATIONS AS SHOWN .12 INCH HIGH. COLOR BLACK PER ND1002019.
13. MARK SLEEVING OF MULTI-CONDUCTORS WITH THE CONDUCTOR NUMBER .12 INCH HIGH. COLOR BLACK. PER ND1002019 WHEN SLEEVING ITEM NUMBERS FOLLOW AN A OR T IN THE ACCESSORIES ITEM NUMBER FIELD.

PENNANT NOTE — GENERAL NOTES

14. A OR T PREFIX IN THE ACCESSORIES ITEM NUMBER COLUMN INDICATES THE READING POSITION AWAY FROM TERMINATION OR TOWARD TERMINATION RESPECTIVELY. OF THE WIRE MARKER SLEEVE.
15. THE SUFFIX LETTER OF A CONDUCTOR IDENTIFICATION NUMBER INDICATES CONDUCTOR SHIELDING. COLOR. OR MARKING.
    A - FROM END SHIELD
    L - WHITE WITH BLUE TRACER
    R - WHITE WITH RED TRACER
    W - WHITE
16. ASSEMBLE CONTACTS IN ALL CONNECTOR GROMMET HOLES.
17. SECURE TO CABLE USING ITEM 21. MARKING TO READ AWAY FROM CONNECTOR.
18. SEAL ZIPPER TUBING PER ND1002153.
19. SERIALIZE PER ND1002023.
20. ITEM 23 FURNISHED WITH ITEM 5.
21. ITEM 26 FURNISHED WITH ITEM 4.
22. ITEM 24 SHALL BE SHORTENED WHEN NECESSARY TO AVOID INTERFERENCE WITH FERRULES AND MAY BE CUT LENGTHWISE ON ONE SIDE. SELECT ONE OR MORE OF ITEM 24 AS REQUIRED TO FIT.
23. NOTES 10 AND 16 BOTH APPLY

PENNANT NOTE — GENERAL NOTES

TOLERANCE CHART. UNLESS OTHERWISE SPECIFIED ---

APPLICABLE LENGTH FOR WIRE OR CABLE. STRIP WIRE. STRIP JACKET. CUT WIRE OR CUT SHIELD.	TOLERANCE: WIRE OR CABLE	STRIP: WIRE	STRIP: JACKET	CUT: WIRE	CUT: SHIELD
UNDER 1 INCH	+ .06-.00	+.03-.00	+.06-.06	+.06-.06	+.06-.06
1 INCH TO 6 INCHES	+ .50-.00	+.06-.00	+.25-.25	+.25-.25	+.25-.25
6 INCHES TO 6 FEET	+1.00-.00		+.50-.50	+.50-.50	+.50-.50
OVER 6 FEET	+2.00-.00				

PENNANT NOTE — LIST OF MATERIALS

NOTE	ITEM	QTY	PART NO	DESCRIPTION
	1	1	1900986-001	WIRE ND1002181 TYPE 2. CLASS 4. WHT JACKET 22AWG WHT/BLU. WHT/RED 128 FT TOTAL LENGTH
	2	1	1900986-002	WIRE ND1002181 TYPE 1. CLASS 4. WHT JACKET 22AWG WHT. 256 FT TOTAL LENGTH
	3	1	1900986-003	WIRE ND1002181 TYPE 1. CLASS 1. 22AWG. WHT 560 FT TOTAL LENGTH
	4	1	MS3126F22-55SW	(1897046-5511) CONNECTOR PLUG
	5	1	MS3126F22-55PX	(1897045-552) CONNECTOR PLUG
23	6	1	1010607-001	CONNECTOR-PLUG
10	7	13	1000243-003	FERRULE. ELEC COND
10	8	13	1000242-002	FERRULE. ELEC COND
10	9	7	1000243-008	FERRULE. ELEC COND
10	10	7	1000242-007	FERRULE. ELEC COND
10	11	27	1010490-198	INSULATION-SLEEVING ELEC
10	12	13	1010490-200	INSULATION-SLEEVING ELEC
10	13	5	1010490-258	INSULATION-SLEEVING ELEC
10	14	5	1016006-002	SPLICE REDUCER
10	15	3	1016128-041	BAND-IDENTIFICATION
10	16	1	1016128-011	BAND-IDENTIFICATION
10	17	1	1016184-002	TRANSITION-HARNESS. 2 FINGER (Y)

PENNANT LIST OF MATERIALS

NOTE	ITEM	QTY	PART NO	DESCRIPTION
	18	1	1900986-004	ZIPPER TUBING ND1002155, TYPE 1, PLASTIC, FLEXIBLE 1 INCH DIA 13 FT TOTAL LENGTH
	19	1	1900986-005	ZIPPER TUBING ND1002155, TYPE 1, PLASTIC, FLEXIBLE 3/4 DIA 4 FT TOTAL LENGTH
	20	1	1900986-006	ZIPPER TUBING ND1002155, TYPE 1, PLASTIC, FLEXIBLE 7/8 DIA 4 FT TOTAL LENGTH
	21	AR	MIL-T-713	LACING TAPE TYPE B, CLASS 2, BLACK (ES-2732 NO. 18)
10	22	109	1010464-002	CONTACT SOCKET
20	23			CONTACT, PINS
22	24	AR	1897147-104,	106, 108, 112, CABLE CLAMP SLEEVE
10	25	2	1016282-022	RUBBER GROMMET
21	26			CONTACT, SOCKET
10	27	1	1015902- 46	TERMINAL LUG
	28	2	1900986-007	TUBING MODIFIED POLYVINYL CHLORIDE, FLEXIBLE SHRINK-FIT PER 1016197-006, 6 INCHES TOT. LGTH.
	29	1	MS-24056-2	CONNECTOR
	30	1	MS-24018-1	CONNECTOR, HOOD
	31	1	1900986-008	TUBING MODIFIED POLYVINYL CHLORIDE, FLEXIBLE SHRINK-FIT PER 1016197-006, 2 FEET TOT. LGTH.

MANNED SPACECRAFT CENTER HOUSTON, TEXAS | SIZE A | 1900986
SCALE-NONE | REV LTR D | SHEET 6 OF 16

CONDUCTOR NUMBER	ITEM NO.		FROM CUT WIRE OR SHIELD STRIP WIRE OR JACKET CIRCUIT POINT		TERMINATION SPEC. ITEM NO.		TO CUT WIRE OR SHIELD STRIP WIRE OR JACKET CIRCUIT POINT		TERMINATION SPEC. ITEM NO.	
A 1	3		P2-H*	22N	26		P3- 68	22N	22	
A 2	3		P2-J*	22N	26		P3- 93	22N	22	
A 3			DELETED							
			DELETED							
A 3A			DELETED							
A 3W			DELETED							
A 4			DELETED							
			DELETED							
A 4A			DELETED							
A 4W			DELETED							
A 5	3		P2-N*	22N	26		P3- 78	22N	22	
A 6	3		P2-P*	22N	26		P3- 4	22N	22	
A 7	3		P2-Q*	22N	26		P3- 57	22N	22	
A 8	3		P2-R*	22N	26		P3- 12	22N	22	
A 9	3		P2-S*	22N	26		P3- 7	22N	22	
A 10	3		P2-T*	22N	26		P3- 55	22N	22	
A 11	3		P2-U*	22N	26		P3- 45	22N	22	
A 12	3		P2-V*	22N	26		P3- 65	22N	22	

1 THE STD CONDUCTOR TERMINATION FIGURES ARE PER
2 DIMENSIONS ARE IN INCHES AND TWO PLACE DECIMALS.

MANNED SPACECRAFT CENTER HOUSTON, TEXAS | SIZE A | 1900986
SCALE-NONE | REV LTR C | SHEET 7 OF 16

CONDUCTOR NUMBER	ITEM NO.		FROM CUT WIRE OR SHIELD STRIP WIRE OR JACKET CIRCUIT POINT		TERMINATION SPEC. ITEM NO.		TO CUT WIRE OR SHIELD STRIP WIRE OR JACKET CIRCUIT POINT		TERMINATION SPEC. ITEM NO.	
A 13	1		230 200	9 10 5			230 200	A 11 7A		
				A 11						
A 13A	3		SHLD A13	37N			E1	37N		
A 13L			P2-X*	22N 26			P3- 97	22N	22	
A 13R			P2-W*	22N 26			P3- 96	22N	22	
A 14	1		230 200	9 10 5			230 200	A 11 7A		
				A 11						
A 14A	3		SHLD A14	37N			E1	37N		
A 14L			P2-Z*	22N 26			P3- 11	22N	22	
A 14R			P2-Y*	22N 26			P3- 10	22N	22	
A 15	1		280 250	9 10 5			230 200	A 11 7A		
				A 11						
A 15A	3		SHLD A15	37N			E1	37N		
A 15L			P2-CC	22N 26			P3- 71	22N	22	
A 15R			P2-BB	22N 26			P3- 70	22N	22	
A 16	1		280 250	9 10 5			280 250	A 11 5		
				A 11						
A 16A	3		SHLD A16	37N			E1	37N		

1 THE STD CONDUCTOR TERMINATION FIGURES ARE PER
2 DIMENSIONS ARE IN INCHES AND TWO PLACE DECIMALS.

MANNED SPACECRAFT CENTER HOUSTON, TEXAS | SIZE A | 1900986
SCALE-NONE | REV LTR C | SHEET 8 OF 16

CONDUCTOR NUMBER	ITEM NO.		FROM CUT WIRE OR SHIELD STRIP WIRE OR JACKET CIRCUIT POINT		TERMINATION SPEC. ITEM NO.		TO CUT WIRE OR SHIELD STRIP WIRE OR JACKET CIRCUIT POINT		TERMINATION SPEC. ITEM NO.	
A 16L			P2-EE	22N	26		P3- 83	22N	22	
A 16R			P2-DD	22N	26		P3- 82	22N	22	
A 17	2		280 250	7 8 5			280 250	A 12 5		
				A 11						
A 17A	3		SHLD A17	37N			E1	37N		
A 17W			P2-FF	22N	26		P3- 76	22N	22	
A 18	3		P2-GG	22N	26		P3- 89	22N	22	
A 19	3		P2-B	22N	26		E1	22N		
A 20	3		P4- 1	25N	27		P3- 84	22N	22	
A 21	1		230 200	9 10 5			230 200	A 11 5		
				A 11						
A 21A	3		SHLD A21	37N			E2	37N		
A 21L			P1-N	22N	23		P3- 28	22N	22	
A 21R			P1-M	22N	23		P3- 29	22N	22	
A 22	1		230 200	9 10 5			230 200	A 11 7A		
				A 11						
A 22A	3		SHLD A22	37N			E2	37N		
A 22L			P1-R	22N	23		P3- 2	22N	22	

1 THE STD CONDUCTOR TERMINATION FIGURES ARE PER
2 DIMENSIONS ARE IN INCHES AND TWO PLACE DECIMALS.

MANNED SPACECRAFT CENTER HOUSTON, TEXAS | SIZE A | 1900986
SCALE-NONE | REV LTR C | SHEET 9 OF 16

CONDUCTOR NUMBER	ITEM NO.		FROM CIRCUIT POINT	CUT WIRE OR SHIELD STRIP WIRE OR JACKET		TERMINATION SPEC.		NO.	TO CIRCUIT POINT	CUT WIRE OR SHIELD STRIP WIRE OR JACKET		TERMINATION SPEC.		NO.
A 22R			P1-P	22N		23			P3- 1	22N		22		
A 23	1			230	200	9 10	5			230	200	A 11	7A	
						A 11								
A 23A	3		SHLD A23	37N					E2	37N				
A 23L			P1-T	22N		23			P3- 15	22N		22		
A 23R			P1-S	22N		23			P3- 14	22N		22		
A 24	3		P1-U	22N		23			P3- 9	22N		22		
A 25	3		P1-V	22N		23			P3- 25	22N		22		
A 26	3		P1-W	22N		23			P3- 79	22N		22		
A 27	2			230	200	7 8	5			230	200	A 12	7A	
						A 11								
A 27A	3		SHLD A27	37N					E2	37N				
A 27W			P1-X	22N		23			P3- 88	22N		22		
A 28	3		P1-Y	22N		23			P3- 46	22N		22		
A 29	3		P1-A*	22N		23			P3- 13	22N		22		
A 30	3		P1-B*	22N		23			P3- 6	22N		22		
A 31	3		P1-C*	22N		23			P3- 34	22N		22		
A 32	3		P1-Z	22N		23			P3- 18	22N		22		

1 THE STD CONDUCTOR TERMINATION FIGURES ARE PER
2 DIMENSIONS ARE IN INCHES AND TWO PLACE DECIMALS.

MANNED SPACECRAFT CENTER HOUSTON, TEXAS | SIZE A | 1900986
SCALE - NONE | REV LTR C | SHEET 10 OF 16

MIL 2089 - 4-63 WIN

CONDUCTOR NUMBER	ITEM NO.		FROM CIRCUIT POINT	CUT WIRE OR SHIELD STRIP WIRE OR JACKET		TERMINATION SPEC.		NO.	TO CIRCUIT POINT	CUT WIRE OR SHIELD STRIP WIRE OR JACKET		TERMINATION SPEC.		NO.
A 33	2			280	250	7 8	5			280	250	A 12	7A	
						A 11								
A 33A	3		SHLD A33	37N					E2	37N				
A 33W			P1-D*	22N		23			P3- 49	22N		22		
A 34	2			280	250	7 8	5			280	250	A 12	7A	
						A 11								
A 34A	3		SHLD A34	37N					E2	37N				
A 34W			P1-F*	22N		23			P3-104	22N		22		
A 35	3		P1-G*	22N		23			P3- 56	22N		22		
A 36	2			280	250	7 8	5			280	250	A 12	7A	
						A 11								
A 36A	3		SHLD A36	37N					E3	37N				
A 36W			P1-H*	22N		23			P3- 92	22N		22		
A 37	3		P1-I*	22N		23			P3- 35	22N		22		
A 38	3		P1-J*	22N		23			P3- 36	22N		22		
A 39	2			280	250	7 8	5			280	250	A 12	7A	
						A 11								
A 39A	3		SHLD A39	37N					E3	37N				

1 THE STD CONDUCTOR TERMINATION FIGURES ARE PER
2 DIMENSIONS ARE IN INCHES AND TWO PLACE DECIMALS.

MANNED SPACECRAFT CENTER HOUSTON, TEXAS | SIZE A | 1900986
SCALE - NONE | REV LTR C | SHEET 11 OF 16

MIL 2089 - 4-63 WIN

CONDUCTOR NUMBER	ITEM NO.		FROM CIRCUIT POINT	CUT WIRE OR SHIELD STRIP WIRE OR JACKET		TERMINATION SPEC.		NO.	TO CIRCUIT POINT	CUT WIRE OR SHIELD STRIP WIRE OR JACKET		TERMINATION SPEC.		NO.
A 39W			P1-K*	22N		23			P3-105	22N		22		
A 40	3		P1-M*	22N		23			P3- 37	22N		22		
A 41	3		P1-N*	22N		23			P3- 23	22N		22		
A 42	2			330	300	7 8	5			330	300	A 12	7A	
						A 11								
A 42A	3		SHLD A42	37N					E3	37				
A 42W			P1-P*	22N		23			P3- 94	22		22		
A 43	2			330	300	7 8	5			330	300	A 12	7A	
						A 11								
A 43A	3		SHLD A43	37N					E3	37N				
A 43W			P1-Q*	22N		23			P3- 22	22N		22		
A 44	3		P1-R*	22N		23			P3- 24	22N		22		
A 45			DELETED											
			DELETED											
A 45A			DELETED											
A 45L			DELETED											
A 45R			DELETED											
A 46	3		P1-U*	22N		23			P3- 58	22N		22		

1 THE STD CONDUCTOR TERMINATION FIGURES ARE PER
2 DIMENSIONS ARE IN INCHES AND TWO PLACE DECIMALS.

MANNED SPACECRAFT CENTER HOUSTON, TEXAS | SIZE A | 1900986
SCALE - NONE | REV LTR C | SHEET 12 OF 16

MIL 2089 - 4-63 WIN

CONDUCTOR NUMBER	ITEM NO.		FROM CIRCUIT POINT	CUT WIRE OR SHIELD STRIP WIRE OR JACKET		TERMINATION SPEC.		NO.	TO CIRCUIT POINT	CUT WIRE OR SHIELD STRIP WIRE OR JACKET		TERMINATION SPEC.		NO.
A 47	2			330	300	7 8	5			330	300	A 12	7A	
						A 11								
A 47A	3		SHLD A47	37N					E3	37N				
A 47W			P1-V*	22N		23			E5-37N	22N		22		
A 48	2			380	350	7 8	5			380	350	A 12	7A	
						A 11								
A 48A	3		SHLD A48	37N					E4	37N				
A 48W			P1-W*	22N		23			P3-103	22N		22		
A 49	2			380	350	7 8	5			380	350	A 12	7A	
						A 11								
A 49A	3		SHLD A49	37N					E4	37N				
A 49W			P1-X*	22N		23			P3- 39	22N		22		
A 50	3		P1-Y*	22N		23			P3- 48	22N		22		
A 51	3		P1-Z*	22N		23			P3- 38	22N		22		
A 52	2			380	350	7 8	5			380	350	A 12	7A	
						A 11								
A 52A	3		SHLD A52	37N					E4	37N				
A 52W			P1-AA	22N		23			P3- 59	22N		22		

1 THE STD CONDUCTOR TERMINATION FIGURES ARE PER
2 DIMENSIONS ARE IN INCHES AND TWO PLACE DECIMALS.

MANNED SPACECRAFT CENTER HOUSTON, TEXAS | SIZE A | 1900986
SCALE - NONE | REV LTR C | SHEET 13 OF 16

MIL 2089 - 4-63 WIN

GIJ CABLE W-54 C 1900986

CONDUCTOR INDIVIDUAL LENGTH NUMBER	ITEM NO.	2	FROM CUT WIRE OR SHIELD STRIP WIRE OR JACKET CIRCUIT POINT	2	T I N	2	TERMINATION SPEC. 1 ITEM NO.	NO.	TO CUT WIRE OR SHIELD STRIP WIRE OR JACKET CIRCUIT POINT	2	T I N	2	TERMINATION SPEC. 1 ITEM NO.	NO.
A 53			DELETED											
			DELETED											
A 53A			DELETED											
A 53W			DELETED											
A 54	3		P1-CC	22N			23		P3- 47	22N			22	
A 55	3		P1-DD	22N			23		P3- 69	22N			22	
A 56	3		P1-EE	22N			23		P3- 5	22N			22	
A 57	3		P1-FF	22N			23		P3- 27	22N			22	
A 58	2			430	400		7 8	5		430	400		A 12	7A
							A 11							
A 58A	3		SHLD A58	37N					E4	37N				
A 58W			P1-GG	22N			23		P3- 26	22N			22	
A 59	3		P1-B	22N			23		E2	37N				
A 60	3		E2	37N					E3	37N				
A 61	3		E3	37N					E4	37N				
A 62	3		P3- 90	22N			22		P5-B	25Y				
A 63	3		P3-106	22N			22		P5-C	25Y				
A 64	3		P3-108	22N			22		E5	37N				

1 THE STD CONDUCTOR TERMINATION FIGURES ARE PER
2 DIMENSIONS ARE IN INCHES AND TWO PLACE DECIMALS.

MANNED SPACECRAFT CENTER HOUSTON, TEXAS | SIZE A | 1900986

SCALE - NONE | REV LTR C | SHEET 14 OF 16

MIL 3086 - 4-63 WIR

GIJ CABLE W-54 C 1900986

CONDUCTOR INDIVIDUAL LENGTH NUMBER	ITEM NO.	2	FROM CUT WIRE OR SHIELD STRIP WIRE OR JACKET CIRCUIT POINT	2	T I N	2	TERMINATION SPEC. 1 ITEM NO.	NO.	TO CUT WIRE OR SHIELD STRIP WIRE OR JACKET CIRCUIT POINT	2	T I N	2	TERMINATION SPEC. 1 ITEM NO.	NO.
A 65	3		P3- 91	22N			22		P5-D	25Y				
A 66	3		P3- 80	22N			22		P5-E	25Y				
A 67	3		P3- 95	22N			22		P5-F	25Y				
A 68	3		P1-T*	22N			23		E5	37N				

1 THE STD CONDUCTOR TERMINATION FIGURES ARE PER
2 DIMENSIONS ARE IN INCHES AND TWO PLACE DECIMALS.

MANNED SPACECRAFT CENTER HOUSTON, TEXAS | SIZE A | 1900986

SCALE - NONE | REV LTR C | SHEET 15 OF 16

MIL 3086 - 4-63 WIR

9860061

REVISIONS					
SYM	ZONE	DESCRIPTION	CHG NO.	DATE	APPD.
		SEE SHEET 1 FOR REVISION RECORD			

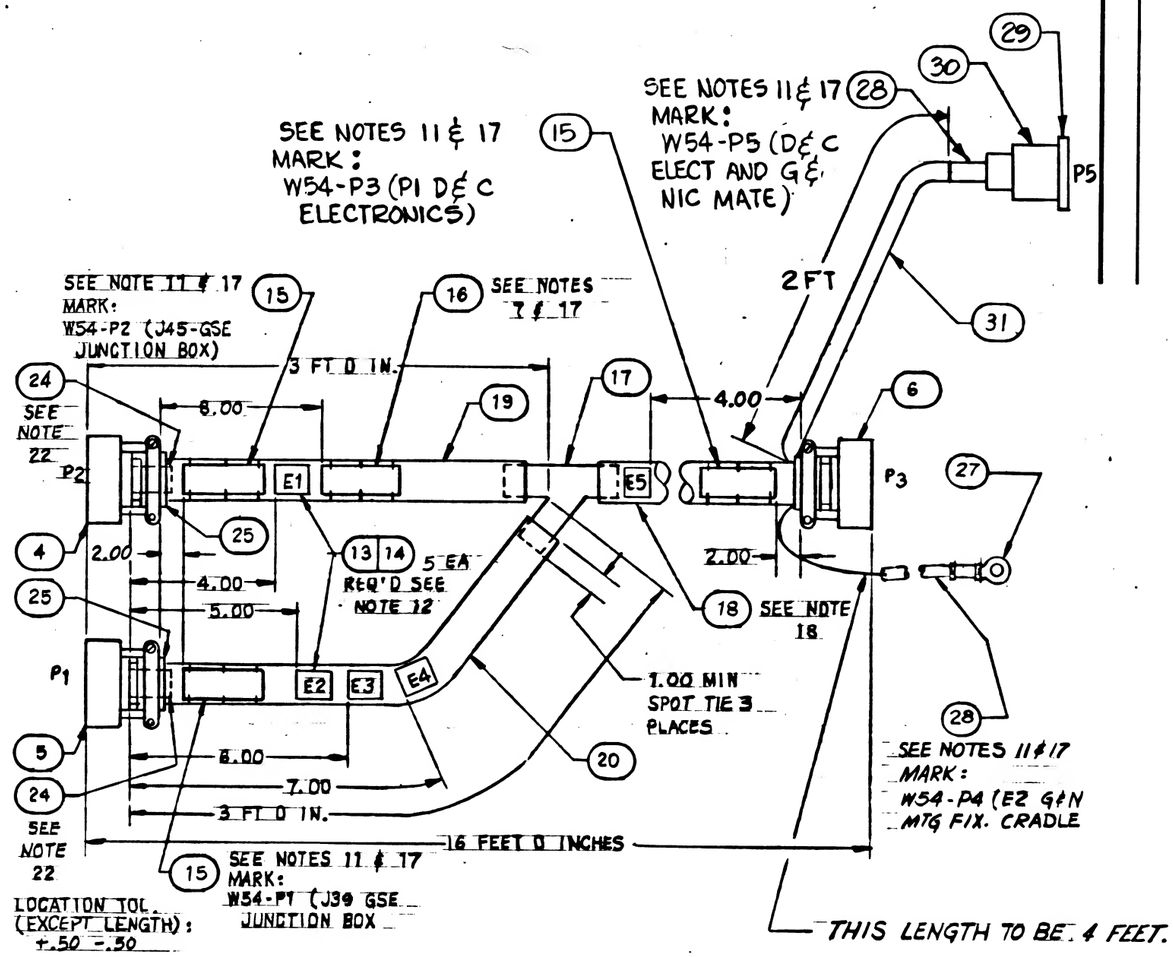

NEXT ASSY	USED ON	UNLESS OTHERWISE SPECIFIED DIMENSIONS ARE IN INCHES TOLERANCES ON FRACTIONS + − DECIMALS + − ANGLES + −	AC SPARK PLUG DIVISION, GMC MILWAUKEE, WISCONSIN	MANNED SPACECRAFT CENTER HOUSTON, TEXAS
APPLICATION		DO NOT SCALE THIS DRAWING	ACSP PN	
			DRAWN KOSMATKA DATE 7 NOV 63	CABLE INTERCONNECT W54
			CHECKED MANNING 11 NOV 63	ISS TESTING
			APPROVAL LIGON 13 NOV 63	
		MATERIAL	APPROVAL	CODE IDENT NO. / SIZE C / 1900986
			NASA APPROVAL	
		CONTRACT NAS9-497	MIT APPROVAL	SCALE-NONE / SHEET 16 OF 16

MIL 1077C-P

1900986

APPLICATION		REVISIONS			
NEXT ASSY	USED ON	SYM	DESCRIPTION	DATE	APPROVAL
1901308	1900005-011 (M)	A	CHANGE IN ACCORDANCE WITH CM-193766 TDRR 09103	18 FEB 64	J.B. PZ
	(M)	B	CHANGE IN ACCORDANCE WITH CM-197536 TDRR 12638 REVISED CUSTOMER DATA (V2-G4)	27 MAY 64	BK PZ
	(M)	C	CHANGE IN ACCORDANCE WITH CM 197757 TDRR 12102	9 JUL 64	HTO PZ
	(M)	D	CHANGE IN ACCORDANCE WITH CM 199018 TDRR 12103	20 JUL 64	CMK MEM
		E	REVISED & UPGRADED TO CLASS A PER TDRR 14944	21 DEC 64	JJJ EWT

REV.																							
SHEET																							
REV STATUS	REV	E	C	D	C	E	E	C	C	C	C	C	C	C	C	C	D						
OF SHEETS	SHEET	1	2	3	4	5	6	7	8	9	10	11	12	13	14	15	16						

AC SPARK PLUG DIVISION, GMC
MILWAUKEE, WISCONSIN

ACSP PN

DRAWN J. Kennette DATE 7 NOV 63
CHECKED D. Delaney 11 NOV 63
APPROVAL E.B. Lidon 13 NOV 63
APPROVAL L. Gelman 1/3/64

NASA APPROVAL
MIT APPROVAL

CONTRACT NAS9-497

MANNED
SPACECRAFT CENTER
HOUSTON, TEXAS

CABLE INTERCONNECT W54
ISS TESTING

CODE IDENT NO.	SIZE		REV
	A	1900986	E
SCALE —		SHEET 1 OF 16	

PENNANT NOTE — GENERAL NOTES

1 SEE CONDUCTOR CHART, PENNANT NOTE 1.

2 SEE CONDUCTOR CHART, PENNANT NOTE 2.

3 INTERPRET DRAWING IN ACCORDANCE WITH STANDARDS PRESCRIBED BY MIL-D-70327.

4 MARK CONDUCTOR IDENTIFICATION ON SINGLE CONDUCTORS PER ND1002019 OMITTING ALL SUFFIX LETTERS EXCEPT A AND B.

5 SPACING OF CONDUCTOR IDENTIFICATION SHALL BE EVERY 15 INCHES MAX. AND AT EACH TERMINATION.

6 SPIRALLING OF THE MARKING IS ALLOWED.

7 IDENTIFY USING DRAWING NO. AND REVISION LETTER PER MIL-STD-130 (ES-267). .12 INCH HIGH CHARACTERS WHITE.

8 Y OR N IN TINNED COLUMN INDICATES YES OR NO.

9 A LETTER WITH AN ASTERISK SUFFIX, INDICATES A LOWER CASE LETTER.

10 VENDOR ITEM - SEE SPECIFICATION CONTROL DRAWING.

11 MARK IDENTIFICATION BAND WITH REFERENCE DESIGNATION AS NOTED .12 INCH HIGH COLOR WHITE, HOT IMPRESSION STAMPING PER ND1002019. CENTRALIZE.

12 MARK SLEEVING WITH REFERENCE DESIGNATIONS AS SHOWN .12 INCH HIGH, COLOR BLACK PER ND1002019.

13 MARK SLEEVING OF MULTI-CONDUCTORS WITH THE CONDUCTOR NUMBER .12 INCH HIGH, COLOR BLACK, PER ND1002019 WHEN SLEEVING ITEM NUMBERS FOLLOW AN A OR T IN THE ACCESSORIES ITEM NUMBER FIELD.

PENNANT NOTE — GENERAL NOTES

14 A OR T PREFIX IN THE ACCESSORIES ITEM NUMBER COLUMN INDICATES THE READING POSITION AWAY FROM TERMINATION OR TOWARD TERMINATION RESPECTIVELY, OF THE WIRE MARKER SLEEVE.

15 THE SUFFIX LETTER OF A CONDUCTOR IDENTIFICATION NUMBER INDICATES CONDUCTOR SHIELDING, COLOR, OR MARKING.
- A - FROM END SHIELD
- L - WHITE WITH BLUE TRACER
- R - WHITE WITH RED TRACER
- W - WHITE

16 ASSEMBLE CONTACTS IN ALL CONNECTOR GROMMET HOLES.

17 SECURE TO CABLE USING ITEM 21, MARKING TO READ AWAY FROM CONNECTOR.

18 SEAL ZIPPER TUBING PER ND1002153.

19 SERIALIZE PER ND1002023.

20 ITEM 23 FURNISHED WITH ITEM 5.

21 ITEM 26 FURNISHED WITH ITEM 4.

22 ITEM 24 SHALL BE SHORTENED WHEN NECESSARY TO AVOID INTERFERENCE WITH FERRULES AND MAY BE CUT LENGTHWISE ON ONE SIDE. SELECT ONE OR MORE OF ITEM 24 AS REQUIRED TO FIT.

23 NOTES 10 AND 16 BOTH APPLY

PENNANT NOTE — GENERAL NOTES

TOLERANCE CHART, UNLESS OTHERWISE SPECIFIED ---

APPLICABLE LENGTH FOR WIRE OR CABLE, STRIP WIRE, STRIP JACKET, CUT WIRE OR CUT SHIELD.	TOLERANCE: WIRE OR CABLE	STRIP: WIRE	STRIP: JACKET	CUT: WIRE	CUT: SHIELD
UNDER 1 INCH	+ .06-.00	+.03-.00	+.06-.06	+.06-.06	+.06-.06
1 INCH TO 6 INCHES	+ .50-.00	+.06-.00	+.25-.25	+.25-.25	+.25-.25
6 INCHES TO 6 FEET	+1.00-.00		+.50-.50	+.50-.50	+.50-.50
OVER 6 FEET	+2.00-.00				

PENNANT NOTE — LIST OF MATERIALS

NOTE	ITEM	QTY	PART NO	DESCRIPTION
	1	1	1900986-001	WIRE ND1002181 TYPE 2, CLASS 4, WHT JACKET 22AWG WHT/BLU, WHT/RED 128 FT TOTAL LENGTH
	2	1	1900986-002	WIRE ND1002181 TYPE 1, CLASS 4, WHT JACKET 22AWG WHT, 256 FT TOTAL LENGTH
	3	1	1900986-003	WIRE ND1002181 TYPE 1, CLASS 1, 22AWG, WHT 560 FT TOTAL LENGTH
	4	1	MS3126F22-55SW (1897046-551)	CONNECTOR PLUG
	5	1	MS3126F22-55PX (1897045-552)	CONNECTOR PLUG
23	6	1	1897173- 1	CONNECTOR-PLUG
10	7	13	1000243-003	FERRULE, ELEC COND
10	8	13	1000242-002	FERRULE, ELEC COND
10	9	7	1000243-008	FERRULE, ELEC COND
10	10	7	1000242-007	FERRULE, ELEC COND
10	11	27	1010490-198	INSULATION-SLEEVING ELEC
10	12	13	1010490-200	INSULATION-SLEEVING ELEC
10	13	5	1010490-258	INSULATION-SLEEVING ELEC
10	14	5	1016006-002	SPLICE REDUCER
10	15	3	1016128-041	BAND-IDENTIFICATION
10	16	1	1016128-011	BAND-IDENTIFICATION
10	17	1	1016184-002	TRANSITION-HARNESS, 2 FINGER (Y)

PERMANT LIST OF MATERIALS

NOTE	ITEM	QTY	PART NO	DESCRIPTION
	18	1	1900986-004	ZIPPER TUBING ND1002155, TYPE 1, PLASTIC, FLEXIBLE 1 INCH DIA 13 FT TOTAL LENGTH
	19	1	1900986-005	ZIPPER TUBING ND1002155, TYPE 1, PLASTIC, FLEXIBLE 3/4 DIA 4 FT TOTAL LENGTH
	20	1	1900986-006	ZIPPER TUBING ND1002155, TYPE 1, PLASTIC, FLEXIBLE 7/8 DIA 4 FT TOTAL LENGTH
	21	AR	MIL-T-713	LACING TAPE TYPE B, CLASS 2, BLACK (ES-2732 NO. 18)
10	22	109	1010738- 6	CONTACT SOCKET
20	23			CONTACT, PINS
22	24	AR	1897147-104,	106, 108, 112, CABLE CLAMP SLEEVE
10	25	2	1016282-022	RUBBER GROMMET
21	26			CONTACT, SOCKET
10	27	1	1015902- 46	TERMINAL LUG
	28	2	1900986-007	TUBING MODIFIED POLYVINYL CHLORIDE, FLEXIBLE SHRINK-FIT PER 1016197-006, 6 INCHES TOT. LGTH.
	29	1	MS-24056-2	CONNECTOR
	30	1	MS-24018-1	CONNECTOR, HOOD
	31	1	1900986-008	TUBING MODIFIED POLYVINYL CHLORIDE, FLEXIBLE SHRINK-FIT PER 1016197-006, 2 FEET TOT. LGTH.

MANNED SPACECRAFT CENTER HOUSTON, TEXAS | SIZE A | 1900986
SCALE-NONE | REV LTR E | SHEET 6 OF 16

MIL 2089 4-63

CONDUCTOR NUMBER	ITEM NO.	2>	FROM CUT WIRE OR SHIELD / STRIP WIRE OR JACKET CIRCUIT POINT	3>	T I N	2>	TERMINATION SPEC. 1>	ITEM NO.	NO.	TO CUT WIRE OR SHIELD / STRIP WIRE OR JACKET CIRCUIT POINT	3>	T I N	2>	TERMINATION SPEC 1>	ITEM NO.	NO.
A 1	3		P2-H*	22	N		26			P3- 68	22	N		22		
A 2	3		P2-J*	22	N		26			P3- 93				22		
A 3			DELETED													
			DELETED													
A 3A			DELETED													
A 3W			DELETED													
A 4			DELETED													
			DELETED													
A 4A			DELETED													
A 4W			DELETED													
A 5	3		P2-N*	22	N		26			P3- 78	22	N		22		
A 6	3		P2-P*	22	N		26			P3- 4	22	N		22		
A 7	3		P2-Q*	22	N		26			P3- 57	22	N		22		
A 8	3		P2-R*	22	N		26			P3- 12	22	N		22		
A 9	3		P2-S*	22	N		26			P3- 7	22	N		22		
A 10	3		P2-T*	22	N		26			P3- 55	22	N		22		
A 11	3		P2-U*	22	N		26			P3- 45	22	N		22		
A 12	3		P2-V*	22	N		26			P3- 65	22	N		22		

1> THE STD CONDUCTOR TERMINATION FIGURES ARE PER
2> DIMENSIONS ARE IN INCHES AND TWO PLACE DECIMALS.

MANNED SPACECRAFT CENTER HOUSTON, TEXAS | SIZE A | 1900986
SCALE-NONE | REV LTR C | SHEET 7 OF 16

MIL 2089 4-63 WIR

CONDUCTOR NUMBER	ITEM NO.	2>	FROM CUT WIRE OR SHIELD / STRIP WIRE OR JACKET CIRCUIT POINT	3>	T I N	2>	TERMINATION SPEC. 1>	ITEM NO.	NO.	TO CUT WIRE OR SHIELD / STRIP WIRE OR JACKET CIRCUIT POINT	3>	T I N	2>	TERMINATION SPEC 1>	ITEM NO.	NO.
A 13	1			230		200	9 10		5		230		200	A 11		7A
							A 11									
A 13A	3		SHLD A13	37	N					E1	37	N				
A 13L			P2-X*	22	N		26			P3- 97	22	N		22		
A 13R			P2-W*	22	N		26			P3- 96	22	N		22		
A 14	1			230		200	9 10		5		230		200	A 11		7A
							A 11									
A 14A	3		SHLD A14	37	N					E1	37	N				
A 14L			P2-Z*	22	N		26			P3- 11	22	N		22		
A 14R			P2-Y*	22	N		26			P3- 10	22	N		22		
A 15	1			280		250	9 10		5		230		200	A 11		7A
							A 11									
A 15A	3		SHLD A15	37	N					E1	37	N				
A 15L			P2-CC	22	N		26			P3- 71	22	N		22		
A 15R			P2-BB	22	N		26			P3- 70	22	N		22		
A 16	1			280		250	9 10		5		280		250	A 11		5
							A 11									
A 16A	3		SHLD A16	37	N					E1	37	N				

1> THE STD CONDUCTOR TERMINATION FIGURES ARE PER
2> DIMENSIONS ARE IN INCHES AND TWO PLACE DECIMALS.

MANNED SPACECRAFT CENTER HOUSTON, TEXAS | SIZE A | 1900986
SCALE-NONE | REV LTR C | SHEET 8 OF 16

MIL 2089 4-63 WIR

CONDUCTOR NUMBER	ITEM NO.	2>	FROM CUT WIRE OR SHIELD / STRIP WIRE OR JACKET CIRCUIT POINT	3>	T I N	2>	TERMINATION SPEC. 1>	ITEM NO.	NO.	TO CUT WIRE OR SHIELD / STRIP WIRE OR JACKET CIRCUIT POINT	3>	T I N	2>	TERMINATION SPEC 1>	ITEM NO.	NO.
A 16L			P2-EE	22	N		26			P3- 83	22	N		22		
A 16R			P2-DD	22	N		26			P3- 82	22	N		22		
A 17	2			280		250	7 8		5		280		250	A 12		5
							A 11									
A 17A	3		SHLD A17	37	N					E1	37	N				
A 17W			P2-FF	22	N		26			P3- 76	22	N		22		
A 18	3		P2-GG	22	N		26			P3- 89	22	N		22		
A 19	3		P2-B	22	N		26			E1	22	N				
A 20	3		P4- 1	25	N		27			P3- 84	22	N		22		
A 21	1			230		200	9 10		5		230		200	A 11		5
							A 11									
A 21A	3		SHLD A21	37	N					E2	37	N				
A 21L			P1-N	22	N		23			P3- 28	22	N		22		
A 21R			P1-M	22	N		23			P3- 29	22	N		22		
A 22	1			230		200	9 10		5		230		200	A 11		7A
							A 11									
A 22A	3		SHLD A22	37	N					E2	37	N				
A 22L			P1-R	22	N		23			P3- 2	22	N		22		

1> THE STD CONDUCTOR TERMINATION FIGURES ARE PER
2> DIMENSIONS ARE IN INCHES AND TWO PLACE DECIMALS.

MANNED SPACECRAFT CENTER HOUSTON, TEXAS | SIZE A | 1900986
SCALE-NONE | REV LTR C | SHEET 9 OF 16

MIL 2089 4-63 WIR

CONDUCTOR NUMBER	ITEM NO.		FROM CUT WIRE OR SHIELD STRIP WIRE OR JACKET CIRCUIT POINT				TERMINATION SPEC.				NO.	TO CUT WIRE OR SHIELD STRIP WIRE OR JACKET CIRCUIT POINT				TERMINATION SPEC.				NO.
A 22R			P1-P	22N			23					P3- 1	22N			22				
A 23	1			230		200	9	10		5			230		200	A	11		7A	
							A	11												
A 23A	3		SHLD A23	37N								E2	37N							
A 23L			P1-T	22N			23					P3- 15	22N			22				
A 23R			P1-S	22N			23					P3- 14	22N			22				
A 24	3		P1-U	22N			23					P3- 9	22N			22				
A 25	3		P1-V	22N			23					P3- 25	22N			22				
A 26	3		P1-W	22N			23					P3- 79	22N			22				
A 27	2			230		200	7	8		5			230		200	A	12		7A	
							A	11												
A 27A	3		SHLD A27	37N								E2	37N							
A 27W			P1-X	22N			23					P3- 88	22N			22				
A 28	3		P1-Y	22N			23					P3- 46	22N			22				
A 29	3		P1-A*	22N			23					P3- 13	22N			22				
A 30	3		P1-B*	22N			23					P3- 6	22N			22				
A 31	3		P1-C*	22N			23					P3- 34	22N			22				
A 32	3		P1-Z	22N			23					P3- 18	22N			22				

1> THE STD CONDUCTOR TERMINATION FIGURES ARE PER
2> DIMENSIONS ARE IN INCHES AND TWO PLACE DECIMALS.

MANNED SPACECRAFT CENTER HOUSTON, TEXAS | SIZE A | 1900986
SCALE - NONE | REV LTR C | SHEET 10 OF 16

MIL 2089 - 4-63 WIR

CONDUCTOR NUMBER	ITEM NO.		FROM CUT WIRE OR SHIELD STRIP WIRE OR JACKET CIRCUIT POINT				TERMINATION SPEC.				NO.	TO CUT WIRE OR SHIELD STRIP WIRE OR JACKET CIRCUIT POINT				TERMINATION SPEC.				NO.	$
A 33	2			280		250	7	8		5			280		250	A	12		7A		
							A	11													
A 33A	3		SHLD A33	37N								E2	37N								
A 33W			P1-D*	22N			23					P3- 49	22N			22					
A 34	2			280		250	7	8		5			280		250	A	12		7A		
							A	11													
A 34A	3		SHLD A34	37N								E2	37N								
A 34W			P1-F*	22N			23					P3-104	22N			22					
A 35	3		P1-G*	22N			23					P3- 56	22N			22					
A 36	2			280		250	7	8		5			280		250	A	12		7A		
							A	11													
A 36A	3		SHLD A36	37N								E3	37N								
A 36W			P1-H*	22N			23					P3- 92	22N			22					
A 37	3		P1-I*	22N			23					P3- 35	22N			22					
A 38	3		P1-J*	22N			23					P3- 36	22N			22					
A 39	2			280		250	7	8		5			280		250	A	12		7A		
							A	11													
A 39A	3		SHLD A39	37N								E3	37N								

1> THE STD CONDUCTOR TERMINATION FIGURES ARE PER
2> DIMENSIONS ARE IN INCHES AND TWO PLACE DECIMALS.

MANNED SPACECRAFT CENTER HOUSTON, TEXAS | SIZE A | 1900986
SCALE - NONE | REV LTR C | SHEET 11 OF 16

MIL 2089 - 4-63 WIR

CONDUCTOR NUMBER	ITEM NO.		FROM CUT WIRE OR SHIELD STRIP WIRE OR JACKET CIRCUIT POINT				TERMINATION SPEC.				NO.	TO CUT WIRE OR SHIELD STRIP WIRE OR JACKET CIRCUIT POINT				TERMINATION SPEC.				NO.
A 39W			P1-K*	22N			23					P3-105	22N			22				
A 40	3		P1-M*	22N			23					P3- 37	22N			22				
A 41	3		P1-N*	22N			23					P3- 23	22N			22				
A 42	2			330		300	7	8		5			330		300	A	12		7A	
							A	11												
A 42A	3		SHLD A42	37N								E3	37							
A 42W			P1-P*	22N			23					P3- 94	22			22				
A 43	2			330		300	7	8		5			330		300	A	12		7A	
							A	11												
A 43A	3		SHLD A43	37N								E3	37N							
A 43W			P1-Q*	22N			23					P3- 22	22N			22				
A 44	3		P1-R*	22N			23					P3- 24	22N			22				
A 45			DELETED																	
			DELETED																	
A 45A			DELETED																	
A 45L			DELETED																	
A 45R			DELETED																	
A 46	3		P1-U*	22N			23					P3- 58	22N			22				

1> THE STD CONDUCTOR TERMINATION FIGURES ARE PER
2> DIMENSIONS ARE IN INCHES AND TWO PLACE DECIMALS.

MANNED SPACECRAFT CENTER HOUSTON, TEXAS | SIZE A | 1900986
SCALE - NONE | REV LTR C | SHEET 12 OF 16

MIL 2089 - 4-63 WIR

CONDUCTOR NUMBER	ITEM NO.		FROM CUT WIRE OR SHIELD STRIP WIRE OR JACKET CIRCUIT POINT				TERMINATION SPEC.				NO.	TO CUT WIRE OR SHIELD STRIP WIRE OR JACKET CIRCUIT POINT				TERMINATION SPEC.				NO.	$
A 47	2			330		300	7	8		5			330		300	A	12		7A		
							A	11													
A 47A	3		SHLD A47	37N								E3	37N								
A 47W			P1-V*	22N			23					E5-37N	22N			22					
A 48	2			380		350	7	8		5			380		350	A	12		7A		
							A	11													
A 48A	3		SHLD A48	37N								E4	37N								
A 48W			P1-W*	22N			23					P3-103	22N			22					
A 49	2			380		350	7	8		5			380		350	A	12		7A		
							A	11													
A 49A	3		SHLD A49	37N								E4	37N								
A 49W			P1-X*	22N			23					P3- 39	22N			22					
A 50	3		P1-Y*	22N			23					P3- 48	22N			22					
A 51	3		P1-Z*	22N			23					P3- 38	22N			22					
A 52	2			380		350	7	8		5			380		350	A	12		7A		
							A	11													
A 52A	3		SHLD A52	37N								E4	37N								
A 52W			P1-AA	22N			23					P3- 59	22N			22					

1> THE STD CONDUCTOR TERMINATION FIGURES ARE PER
2> DIMENSIONS ARE IN INCHES AND TWO PLACE DECIMALS.

MANNED SPACECRAFT CENTER HOUSTON, TEXAS | SIZE A | 1900986
SCALE - NONE | REV LTR C | SHEET 13 OF 16

MIL 2089 - 4-63 WIR

GIJ CABLE W-54 C 1900986

CONDUCTOR NUMBER	INDIVIDUAL LENGTH ITEM NO.	2	FROM CUT WIRE OR SHIELD STRIP WIRE OR JACKET CIRCUIT POINT	2	T I N	2	TERMINATION SPEC. 1 ITEM NO.	NO.	TO CUT WIRE OR SHIELD STRIP WIRE OR JACKET CIRCUIT POINT	2	T I N	2	TERMINATION SPEC. 1 ITEM NO.	NO.
A 53			DELETED											
			DELETED											
A 53A			DELETED											
A 53W			DELETED											
A 54	3		P1-CC		22N		23		P3- 47		22N		22	
A 55	3		P1-DD		22N		23		P3- 69		22N		22	
A 56	3		P1-EE		22N		23		P3- 5		22N		22	
A 57	3		P1-FF		22N		23		P3- 27		22N		22	
A 58	2				430	400	7 8	5			430	400	A 12	7A
							A 11							
A 58A	3		SHLD A58		37N				E4		37N			
A 58W			P1-GG		22N		23		P3- 26		22N		22	
A 59	3		P1-B		22N		23		E2		37N			
A 60	3		E2		37N				E3		37N			
A 61	3		E3		37N				E4		37N			
A 62	3		P3- 90		22N		22		P5-B		25Y			
A 63	3		P3-106		22N		22		P5-C		25Y			
A 64	3		P3-108		22N		22		E5		37N			

1 THE STD CONDUCTOR TERMINATION FIGURES ARE PER
2 DIMENSIONS ARE IN INCHES AND TWO PLACE DECIMALS.

MANNED SPACECRAFT CENTER HOUSTON, TEXAS | SIZE A | 1900986

SCALE-NONE | REV LTR C | SHEET 14 OF 16

MIL 2089 - 4-63 WIR

GIJ CABLE W-54 C 1900986

CONDUCTOR NUMBER	INDIVIDUAL LENGTH ITEM NO.	2	FROM CUT WIRE OR SHIELD STRIP WIRE OR JACKET CIRCUIT POINT	2	T I N	2	TERMINATION SPEC. 1 ITEM NO.	NO.	TO CUT WIRE OR SHIELD STRIP WIRE OR JACKET CIRCUIT POINT	2	T I N	2	TERMINATION SPEC. 1 ITEM NO.	NO.
A 65	3		P3- 91		22N		22		P5-D		25Y			
A 66	3		P3- 80		22N		22		P5-E		25Y			
A 67	3		P3- 95		22N		22		P5-F		25Y			
A 68	3		P1-T*		22N		23		E5		37N			

1 THE STD CONDUCTOR TERMINATION FIGURES ARE PER
2 DIMENSIONS ARE IN INCHES AND TWO PLACE DECIMALS.

MANNED SPACECRAFT CENTER HOUSTON, TEXAS | SIZE A | 1900986

SCALE-NONE | REV LTR C | SHEET 15 OF 16

MIL 2089 - 4-63 WIR

9860061

REVISIONS					
SYM	ZONE	DESCRIPTION	CHG NO.	DATE	APPD.
		SEE SHEET 1 FOR REVISION RECORD			

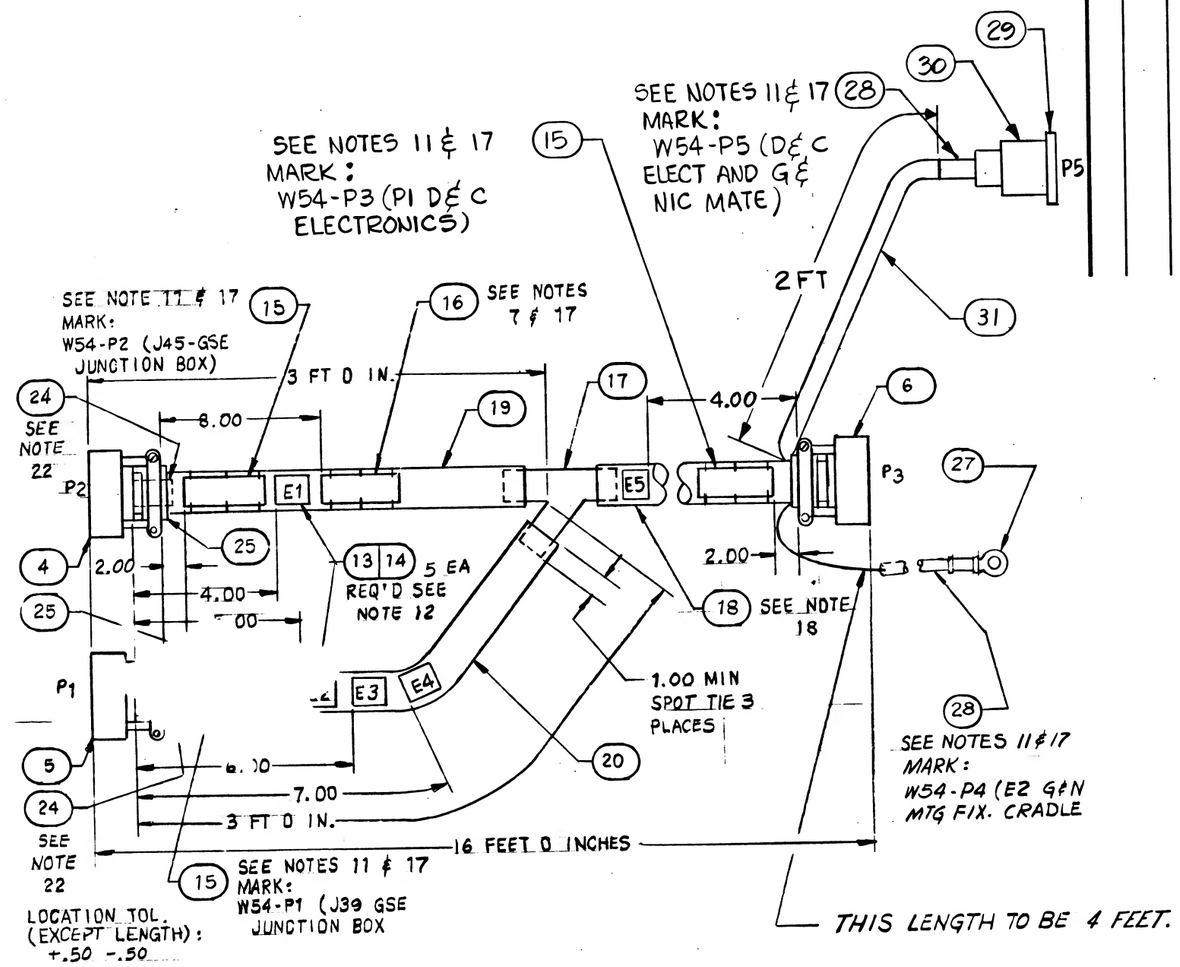

NEXT ASSY	USED ON
APPLICATION	

UNLESS OTHERWISE SPECIFIED
DIMENSIONS ARE IN INCHES
TOLERANCES ON

FRACTIONS	DECIMALS	ANGLES
+	+	+
−	−	−

DO NOT SCALE THIS DRAWING

MATERIAL

CONTRACT NAS9-497

AC SPARK PLUG DIVISION, GMC
MILWAUKEE, WISCONSIN

ACSP PN

DRAWN KOSMATKA DATE 7 NOV 63
CHECKED MANWING 11 NOV. 63
APPROVAL LIGON 13 NOV. 63
APPROVAL

NASA APPROVAL

MIT APPROVAL

MANNED
SPACECRAFT CENTER
HOUSTON, TEXAS

CABLE INTERCONNECT W54
ISS TESTING

CODE IDENT NO. | SIZE C | 1900986

SCALE - NONE | SHEET 16 OF 16

MIL 1077C—P

1900986

APPLICATION		REVISIONS			
NEXT ASSY	USED ON	SYM	DESCRIPTION	DATE	APPROVAL
1901308	1900005-011	A	CHANGE IN ACCORDANCE WITH CM-193766 TDRR 09103	18 FEB 64	J.B. P7
	(H)	B	CHANGE IN ACCORDANCE WITH CN-197536 TDRR 11078 REVISED CUSTOMER DATA (V2-64)	27 MAY 64	BK P7
	(H)	C	CHANGE IN ACCORDANCE WITH CN 197757 TDRR 12102	9 JUL 64	NTO P7
	(M)	D	CHANGE IN ACCORDANCE WITH CN 199018 PER TDRR 12103	20 JUL 64	CMK MEM
	(M)	E	REVISED & UPGRADED TO CLASS A PER TDRR 14944	21 DEC 64	JJJ EWT
		F	REVISED PER TDRR 15991	9 FEB 68	JWD EWT

REV																							
SHEET																							
REV STATUS	REV	F	C	D	C	F	E	C	C	C	C	C	C	C	C	C	D						
OF SHEETS	SHEET	1	2	3	4	5	6	7	8	9	10	11	12	13	14	15	16						

AC SPARK PLUG DIVISION, GMC
MILWAUKEE, WISCONSIN

ACSP PN

DRAWN DATE 7 NOV. 63
CHECKED 11 NOV 63
APPROVAL 13 NOV 63
APPROVAL 1/3/64

MANNED
SPACECRAFT CENTER
HOUSTON, TEXAS

CABLE INTERCONNECT W54
ISS TESTING

NASA APPROVAL
MIT APPROVAL

CODE IDENT NO.	SIZE		REV
	A	1900986	F

CONTRACT NAS9-497 SCALE — SHEET 1 OF 16

PENNANT GENERAL NOTES

NOTE

1 SEE CONDUCTOR CHART, PENNANT NOTE 1.

2 SEE CONDUCTOR CHART, PENNANT NOTE 2.

3 INTERPRET DRAWING IN ACCORDANCE WITH STANDARDS PRESCRIBED BY MIL-D-70327.

4 MARK CONDUCTOR IDENTIFICATION ON SINGLE CONDUCTORS PER ND1002019 OMITTING ALL SUFFIX LETTERS EXCEPT A AND B.

5 SPACING OF CONDUCTOR IDENTIFICATION SHALL BE EVERY 15 INCHES MAX. AND AT EACH TERMINATION.

6 SPIRALLING OF THE MARKING IS ALLOWED.

7 IDENTIFY USING DRAWING NO. AND REVISION LETTER PER MIL-STD-130 (ES-267). .12 INCH HIGH CHARACTERS WHITE.

8 Y OR N IN TINNED COLUMN INDICATES YES OR NO.

9 A LETTER WITH AN ASTERISK SUFFIX, INDICATES A LOWER CASE LETTER.

10 VENDOR ITEM - SEE SPECIFICATION CONTROL DRAWING.

11 MARK IDENTIFICATION BAND WITH REFERENCE DESIGNATION AS NOTED .12 INCH HIGH COLOR WHITE, HOT IMPRESSION STAMPING PER ND1002019. CENTRALIZE.

12 MARK SLEEVING WITH REFERENCE DESIGNATIONS AS SHOWN .12 INCH HIGH, COLOR BLACK PER ND1002019.

13 MARK SLEEVING OF MULTI-CONDUCTORS WITH THE CONDUCTOR NUMBER .12 INCH HIGH, COLOR BLACK, PER ND1002019 WHEN SLEEVING ITEM NUMBERS FOLLOW AN A OR T IN THE ACCESSORIES ITEM NUMBER FIELD.

MANNED SPACECRAFT CENTER HOUSTON, TEXAS	SIZE A	1900986
SCALE - NONE	REV LTR C	SHEET 2 OF 16

MIL 2084 4-63

PENNANT GENERAL NOTES

NOTE

14 A OR T PREFIX IN THE ACCESSORIES ITEM NUMBER COLUMN INDICATES THE READING POSITION AWAY FROM TERMINATION OR TOWARD TERMINATION RESPECTIVELY, OF THE WIRE MARKER SLEEVE.

15 THE SUFFIX LETTER OF A CONDUCTOR IDENTIFICATION NUMBER INDICATES CONDUCTOR SHIELDING, COLOR, OR MARKING.
A - FROM END SHIELD
L - WHITE WITH BLUE TRACER
R - WHITE WITH RED TRACER
W - WHITE

16 ASSEMBLE CONTACTS IN ALL CONNECTOR GROMMET HOLES.

17 SECURE TO CABLE USING ITEM 21, MARKING TO READ AWAY FROM CONNECTOR.

18 SEAL ZIPPER TUBING PER ND1002153.

19 SERIALIZE PER ND1002023.

20 ITEM 29 FURNISHED WITH ITEM 5.

21 ITEM 26 FURNISHED WITH ITEM 4.

22 ITEM 24 SHALL BE SHORTENED WHEN NECESSARY TO AVOID INTERFERENCE WITH FERRULES AND MAY BE CUT LENGTHWISE ON ONE SIDE. SELECT ONE OR MORE OF ITEM 24 AS REQUIRED TO FIT.

23 NOTES 10 AND 16 BOTH APPLY

MANNED SPACECRAFT CENTER HOUSTON, TEXAS	SIZE A	1900986
SCALE - NONE	REV LTR D	SHEET 3 OF 16

MIL 2084 4-63

PENNANT GENERAL NOTES

NOTE

TOLERANCE CHART, UNLESS OTHERWISE SPECIFIED ---

APPLICABLE LENGTH FOR WIRE OR CABLE, STRIP WIRE, STRIP JACKET, CUT WIRE OR CUT SHIELD.	TOLERANCE WIRE OR CABLE	STRIP WIRE	STRIP JACKET	CUT WIRE	CUT SHIELD
UNDER 1 INCH	+ .06-.00	+.03-.00	+.06-.06	+.06-.06	+.06-.06
1 INCH TO 6 INCHES	+ .50-.00	+.06-.00	+.25-.25	+.25-.25	+.25-.25
6 INCHES TO 6 FEET	+1.00-.00		+.50-.50	+.50-.50	+.50-.50
OVER 6 FEET	+2.00-.00				

MANNED SPACECRAFT CENTER HOUSTON, TEXAS	SIZE A	1900986
SCALE - NONE	REV LTR C	SHEET 4 OF 16

MIL 2084 4-63

PENNANT LIST OF MATERIALS

NOTE	ITEM	QTY	PART NO	DESCRIPTION
	1	1	1900986-001	WIRE ND1002181 TYPE 2, CLASS 4, WHT JACKET 22AWG WHT/BLU, WHT/RED 128 FT TOTAL LENGTH
	2	1	1900986-002	WIRE ND1002181 TYPE 1, CLASS 4, WHT JACKET 22AWG WHT, 256 FT TOTAL LENGTH
	3	1	1900986-003	WIRE ND1002181 TYPE 1, CLASS 1, 22AWG, WHT 560 FT TOTAL LENGTH
	4	1	MS3126F22-55SW (1897046-551)	CONNECTOR PLUG
	5	1	MS3126F22-55PX (1897045-552)	CONNECTOR PLUG
23	6	1	1897171- 1	CONNECTOR-PLUG
10	7	13	1000243-003	FERRULE, ELEC COND
10	8	13	1000242-002	FERRULE, ELEC COND
10	9	7	1000243-008	FERRULE, ELEC COND
10	10	7	1000242-007	FERRULE, ELEC COND
10	11	27	1010490-198	INSULATION-SLEEVING ELEC
10	12	13	1010490-200	INSULATION-SLEEVING ELEC
10	13	5	1010490-258	INSULATION-SLEEVING ELEC
10	14	5	1016006-002	SPLICE REDUCER
10	15	3	1016128-041	BAND-IDENTIFICATION
10	16	1	1016128-011	BAND-IDENTIFICATION
10	17	1	1016184-002	TRANSITION-HARNESS, 2 FINGER (Y)

MANNED SPACECRAFT CENTER HOUSTON, TEXAS	SIZE A	1900986
SCALE - NONE	REV LTR F	SHEET 5 OF 16

MIL 2084 4-63

PERMANT LIST OF MATERIALS

NOTE	ITEM	QTY	PART NO	DESCRIPTION
	18	1	1900986-004	ZIPPER TUBING ND1002155, TYPE 1, PLASTIC, FLEXIBLE 1 INCH DIA 13 FT TOTAL LENGTH
	19	1	1900986-005	ZIPPER TUBING ND1002155, TYPE 1, PLASTIC, FLEXIBLE 3/4 DIA 4 FT TOTAL LENGTH
	20	1	1900986-006	ZIPPER TUBING ND1002155, TYPE 1, PLASTIC, FLEXIBLE 7/8 DIA 4 FT TOTAL LENGTH
	21	AR	MIL-T-713	LACING TAPE TYPE B, CLASS 2, BLACK (ES-2732 NO. 18)
10	22	109	1010738- 6	CONTACT SOCKET
20	23			CONTACT, PINS
22	24	AR	1897147-104,	106, 108, 112, CABLE CLAMP SLEEVE
10	25	2	1016282-022	RUBBER GROMMET
21	26			CONTACT, SOCKET
10	27	1	1015902- 46	TERMINAL LUG
	28	2	1900986-007	TUBING MODIFIED POLYVINYL CHLORIDE, FLEXIBLE SHRINK-FIT PER 1016197-006, 6 INCHES TOT. LGTH.
	29	1	MS-24056-2	CONNECTOR
	30	1	MS-24018-1	CONNECTOR, HOOD
	31	1	1900986-008	TUBING MODIFIED POLYVINYL CHLORIDE, FLEXIBLE SHRINK-FIT PER 1016197-006, 2 FEET TOT. LGTH.

MANNED SPACECRAFT CENTER HOUSTON, TEXAS | SIZE A | 1900986
SCALE-NONE | REV LTR E | SHEET 6 OF 16

CONDUCTOR NUMBER	ITEM NO.	2	FROM CUT WIRE OR SHIELD STRIP WIRE OR JACKET CIRCUIT POINT	2	T I N	2	TERMINATION SPEC. 1 ITEM NO.	NO.	TO CUT WIRE OR SHIELD STRIP WIRE OR JACKET CIRCUIT POINT	2	T I N	2	TERMINATION SPEC. 1 ITEM NO.	NO.	8
A 1	3		P2-H*	22	N		26		P3- 68	22	N		22		
A 2	3		P2-J*	22	N		26		P3- 93				22		
A 3			DELETED												
			DELETED												
A 3A			DELETED												
A 3W			DELETED												
A 4			DELETED												
			DELETED												
A 4A			DELETED												
A 4W			DELETED												
A 5	3		P2-N*	22	N		26		P3- 78	22	N		22		
A 6	3		P2-P*	22	N		26		P3- 4	22	N		22		
A 7	3		P2-Q*	22	N		26		P3- 57	22	N		22		
A 8	3		P2-R*	22	N		26		P3- 12	22	N		22		
A 9	3		P2-S*	22	N		26		P3- 7	22	N		22		
A 10	3		P2-T*	22	N		26		P3- 55	22	N		22		
A 11	3		P2-U*	22	N		26		P3- 45	22	N		22		
A 12	3		P2-V*	22	N		26		P3- 65	22	N		22		

1 THE STD CONDUCTOR TERMINATION FIGURES ARE PER
2 DIMENSIONS ARE IN INCHES AND TWO PLACE DECIMALS.

MANNED SPACECRAFT CENTER HOUSTON, TEXAS | SIZE A | 1900986
SCALE-NONE | REV LTR C | SHEET 7 OF 16

CONDUCTOR NUMBER	ITEM NO.	2	FROM CUT WIRE OR SHIELD STRIP WIRE OR JACKET CIRCUIT POINT	2	T I N	2	TERMINATION SPEC. 1 ITEM NO.	NO.	TO CUT WIRE OR SHIELD STRIP WIRE OR JACKET CIRCUIT POINT	2	T I N	2	TERMINATION SPEC. 1 ITEM NO.	NO.
A 13	1			230	200		9 10	5		230	200		A 11	7A
							A 11							
A 13A	3		SHLD A13	37	N				E1	37	N			
A 13L			P2-X*	22	N		26		P3- 97	22	N		22	
A 13R			P2-W*	22	N		26		P3- 96	22	N		22	
A 14	1			230	200		9 10	5		230	200		A 11	7A
							A 11							
A 14A	3		SHLD A14	37	N				E1	37	N			
A 14L			P2-Z*	22	N		26		P3- 11	22	N		22	
A 14R			P2-Y*	22	N		26		P3- 10	22	N		22	
A 15	1			280	250		9 10	5		230	200		A 11	7A
							A 11							
A 15A	3		SHLD A15	37	N				E1	37	N			
A 15L			P2-CC	22	N		26		P3- 71	22	N		22	
A 15R			P2-BB	22	N		26		P3- 70	22	N		22	
A 16	1			280	250		9 10	5		280	250		A 11	5
							A 11							
A 16A	3		SHLD A16	37	N				E1	37	N			

1 THE STD CONDUCTOR TERMINATION FIGURES ARE PER
2 DIMENSIONS ARE IN INCHES AND TWO PLACE DECIMALS.

MANNED SPACECRAFT CENTER HOUSTON, TEXAS | SIZE A | 1900986
SCALE-NONE | REV LTR C | SHEET 8 OF 16

CONDUCTOR NUMBER	ITEM NO.	2	FROM CUT WIRE OR SHIELD STRIP WIRE OR JACKET CIRCUIT POINT	2	T I N	2	TERMINATION SPEC. 1 ITEM NO.	NO.	TO CUT WIRE OR SHIELD STRIP WIRE OR JACKET CIRCUIT POINT	2	T I N	2	TERMINATION SPEC. 1 ITEM NO.	NO.	8
A 16L			P2-EE	22	N		26		P3- 83	22	N		22		
A 16R			P2-DD	22	N		26		P3- 82	22	N		22		
A 17	2			280	250		7 8	5		280	250		A 12	5	
							A 11								
A 17A	3		SHLD A17	37	N				E1	37	N				
A 17W			P2-FF	22	N		26		P3- 76	22	N		22		
A 18	3		P2-GG	22	N		26		P3- 89	22	N		22		
A 19	3		P2-B	22	N		26		E1	22	N				
A 20	3		P4- 1	25	N		27		P3- 84	22	N		22		
A 21	1			230	200		9 10	5		230	200		A 11	5	
							A 11								
A 21A	3		SHLD A21	37	N				E2	37	N				
A 21L			P1-N	22	N		23		P3- 28	22	N		22		
A 21R			P1-M	22	N		23		P3- 29	22	N		22		
A 22	1			230	200		9 10	5		230	200		A 11	7A	
							A 11								
A 22A	3		SHLD A22	37	N				E2	37	N				
A 22L			P1-R	22	N		23		P3- 2	22	N		22		

1 THE STD CONDUCTOR TERMINATION FIGURES ARE PER
2 DIMENSIONS ARE IN INCHES AND TWO PLACE DECIMALS.

MANNED SPACECRAFT CENTER HOUSTON, TEXAS | SIZE A | 1900986
SCALE-NONE | REV LTR C | SHEET 9 OF 16

GIJ CABLE W-54 C 1900986

CONDUCTOR INDIVIDUAL LENGTH NUMBER	ITEM NO.	2	FROM CUT WIRE OR SHIELD STRIP WIRE OR JACKET CIRCUIT POINT	2	T I N	2	TERMINATION SPEC. 1 ITEM NO.	NO.	TO CUT WIRE OR SHIELD STRIP WIRE OR JACKET CIRCUIT POINT	2	T I N	2	TERMINATION SPEC 1 ITEM NO.	NO.
A 22R			P1-P	22N			23		P3- 1	22N			22	
A 23	1			230		200	9 10	5		230		200	A 11	7A
							A 11							
A 23A	3		SHLD A23	37N					E2	37N				
A 23L			P1-T	22N			23		P3- 15	22N			22	
A 23R			P1-S	22N			23		P3- 14	22N			22	
A 24	3		P1-U	22N			23		P3- 9	22N			22	
A 25	3		P1-V	22N			23		P3- 25	22N			22	
A 26	3		P1-W	22N			23		P3- 79	22N			22	
A 27	2			230		200	7 8	5		230		200	A 12	7A
							A 11							
A 27A	3		SHLD A27	37N					E2	37N				
A 27W			P1-X	22N			23		P3- 88	22N			22	
A 28	3		P1-Y	22N			23		P3- 46	22N			22	
A 29	3		P1-A*	22N			23		P3- 13	22N			22	
A 30	3		P1-B*	22N			23		P3- 6	22N			22	
A 31	3		P1-C*	22N			23		P3- 34	22N			22	
A 32	3		P1-Z	22N			23		P3- 18	22N			22	

1 THE STD CONDUCTOR TERMINATION FIGURES ARE PER
2 DIMENSIONS ARE IN INCHES AND TWO PLACE DECIMALS.

MANNED SPACECRAFT CENTER HOUSTON, TEXAS | SIZE A | 1900986
SCALE - NONE | REV LTR C | SHEET 10 OF 16

MIL 2089 - 4-63 WIR

GIJ CABLE W-54 C 1900986

CONDUCTOR INDIVIDUAL LENGTH NUMBER	ITEM NO.	2	FROM CUT WIRE OR SHIELD STRIP WIRE OR JACKET CIRCUIT POINT	2	T I N	2	TERMINATION SPEC. 1 ITEM NO.	NO.	TO CUT WIRE OR SHIELD STRIP WIRE OR JACKET CIRCUIT POINT	2	T I N	2	TERMINATION SPEC 1 ITEM NO.	NO.
A 33	2			280		250	7 8	5		280		250	A 12	7A
							A 11							
A 33A	3		SHLD A33	37N					E2	37N				
A 33W			P1-D*	22N			23		P3- 49	22N			22	
A 34	2			280		250	7 8	5		280		250	A 12	7A
							A 11							
A 34A	3		SHLD A34	37N					E2	37N				
A 34W			P1-F*	22N			23		P3-104	22N			22	
A 35	3		P1-G*	22N			23		P3- 56	22N			22	
A 36	2			280		250	7 8	5		280		250	A 12	7A
							A 11							
A 36A	3		SHLD A36	37N					E3	37N				
A 36W			P1-H*	22N			23		P3- 92	22N			22	
A 37	3		P1-I*	22N			23		P3- 35	22N			22	
A 38	3		P1-J*	22N			23		P3- 36	22N			22	
A 39	2			280		250	7 8	5		280		250	A 12	7A
							A 11							
A 39A	3		SHLD A39	37N					E3	37N				

1 THE STD CONDUCTOR TERMINATION FIGURES ARE PER
2 DIMENSIONS ARE IN INCHES AND TWO PLACE DECIMALS.

MANNED SPACECRAFT CENTER HOUSTON, TEXAS | SIZE A | 1900986
SCALE - NONE | REV LTR C | SHEET 11 OF 16

MIL 2089 - 4-63 WIR

GIJ CABLE W-54 C 1900986

CONDUCTOR INDIVIDUAL LENGTH NUMBER	ITEM NO.	2	FROM CUT WIRE OR SHIELD STRIP WIRE OR JACKET CIRCUIT POINT	2	T I N	2	TERMINATION SPEC. 1 ITEM NO.	NO.	TO CUT WIRE OR SHIELD STRIP WIRE OR JACKET CIRCUIT POINT	2	T I N	2	TERMINATION SPEC 1 ITEM NO.	NO.
A 39W			P1-K*	22N			23		P3-105	22N			22	
A 40	3		P1-M*	22N			23		P3- 37	22N			22	
A 41	3		P1-N*	22N			23		P3- 23	22N			22	
A 42	2			330		300	7 8	5		330		300	A 12	7A
							A 11							
A 42A	3		SHLD A42	37N					E3	37				
A 42W			P1-P*	22N			23		P3- 94	22			22	
A 43	2			330		300	7 8	5		330		300	A 12	7A
							A 11							
A 43A	3		SHLD A43	37N					E3	37N				
A 43W			P1-Q*	22N			23		P3- 22	22N			22	
A 44	3		P1-R*	22N			23		P3- 24	22N			22	
A 45			DELETED											
			DELETED											
A 45A			DELETED											
A 45L			DELETED											
A 45R			DELETED											
A 46	3		P1-U*	22N			23		P3- 58	22N			22	

1 THE STD CONDUCTOR TERMINATION FIGURES ARE PER
2 DIMENSIONS ARE IN INCHES AND TWO PLACE DECIMALS.

MANNED SPACECRAFT CENTER HOUSTON, TEXAS | SIZE A | 1900986
SCALE - NONE | REV LTR C | SHEET 12 OF 16

MIL 2089 - 4-63 WIR

GIJ CABLE W-54 C 1900986

CONDUCTOR INDIVIDUAL LENGTH NUMBER	ITEM NO.	2	FROM CUT WIRE OR SHIELD STRIP WIRE OR JACKET CIRCUIT POINT	2	T I N	2	TERMINATION SPEC. 1 ITEM NO.	NO.	TO CUT WIRE OR SHIELD STRIP WIRE OR JACKET CIRCUIT POINT	2	T I N	2	TERMINATION SPEC 1 ITEM NO.	NO.
A 47	2			330		300	7 8	5		330		300	A 12	7A
							A 11							
A 47A	3		SHLD A47	37N					E3	37N				
A 47W			P1-V*	22N			23		E5-37N	22N			22	
A 48	2			380		350	7 8	5		380		350	A 12	7A
							A 11							
A 48A	3		SHLD A48	37N					E4	37N				
A 48W			P1-W*	22N			23		P3-103	22N			22	
A 49	2			380		350	7 8	5		380		350	A 12	7A
							A 11							
A 49A	3		SHLD A49	37N					E4	37N				
A 49W			P1-X*	22N			23		P3- 39	22N			22	
A 50	3		P1-Y*	22N			23		P3- 48	22N			22	
A 51	3		P1-Z*	22N			23		P3- 38	22N			22	
A 52	2			380		350	7 8	5		380		350	A 12	7A
							A 11							
A 52A	3		SHLD A52	37N					E4	37N				
A 52W			P1-AA	22N			23		P3- 59	22N			22	

1 THE STD CONDUCTOR TERMINATION FIGURES ARE PER
2 DIMENSIONS ARE IN INCHES AND TWO PLACE DECIMALS.

MANNED SPACECRAFT CENTER HOUSTON, TEXAS | SIZE A | 1900986
SCALE - NONE | REV LTR C | SHEET 13 OF 16

MIL 2089 - 4-63 WIR

GIJ CABLE W-54 C 1900986

CONDUCTOR NUMBER	INDIVIDUAL LENGTH	ITEM NO.	FROM CUT WIRE OR SHIELD STRIP WIRE OR JACKET CIRCUIT POINT	2	TYPE	2	TERMINATION SPEC. 1 ITEM NO.	NO.	TO CUT WIRE OR SHIELD STRIP WIRE OR JACKET CIRCUIT POINT	2	TYPE	2	TERMINATION SPEC 1 ITEM NO.	NO.
A 53			DELETED											
			DELETED											
A 53A			DELETED											
A 53W			DELETED											
A 54	3		P1-CC	22N		23			P3- 47	22N		22		
A 55	3		P1-DD	22N		23			P3- 69	22N		22		
A 56	3		P1-EE	22N		23			P3- 5	22N		22		
A 57	3		P1-FF	22N		23			P3- 27	22N		22		
A 58	2			430	400	7	8	5		430	400	A 12	7A	
						A 11								
A 58A	3		SHLD A58	37N					E4	37N				
A 58W			P1-GG	22N		23			P3- 26	22N		22		
A 59	3		P1-B	22N		23			E2	37N				
A 60	3		E2	37N					E3	37N				
A 61	3		E3	37N					E4	37N				
A 62	3		P3- 90	22N		22			P5-B	25Y				
A 63	3		P3-106	22N		22			P5-C	25Y				
A 64	3		P3-108	22N		22			E5	37N				

1 THE STD CONDUCTOR TERMINATION FIGURES ARE PER
2 DIMENSIONS ARE IN INCHES AND TWO PLACE DECIMALS.

MANNED SPACECRAFT CENTER HOUSTON, TEXAS | SIZE A | 1900986

SCALE - NONE | REV LTR C | SHEET 14 OF 16

MIL 2969 - 4.63 WIR

GIJ CABLE W-54 C 1900986

CONDUCTOR NUMBER	INDIVIDUAL LENGTH	ITEM NO.	FROM CUT WIRE OR SHIELD STRIP WIRE OR JACKET CIRCUIT POINT	2	TYPE	2	TERMINATION SPEC. 1 ITEM NO.	NO.	TO CUT WIRE OR SHIELD STRIP WIRE OR JACKET CIRCUIT POINT	2	TYPE	2	TERMINATION SPEC. 1 ITEM NO.	NO.
A 65	3		P3- 91	22N		22			P5-D	25Y				
A 66	3		P3- 80	22N		22			P5-E	25Y				
A 67	3		P3- 95	22N		22			P5-F	25Y				
A 68	3		P1-T*	22N		23			E5	37N				

1 THE STD CONDUCTOR TERMINATION FIGURES ARE PER
2 DIMENSIONS ARE IN INCHES AND TWO PLACE DECIMALS.

MANNED SPACECRAFT CENTER HOUSTON, TEXAS | SIZE A | 1900986

SCALE - NONE | REV LTR C | SHEET 15 OF 16

MIL 2969 - 4.63 WIR

9860061

REVISIONS				
SYM	ZONE	DESCRIPTION	DATE	APPD.
M		SEE SHEET 1 FOR REVISION RECORD (CHG NO.)		

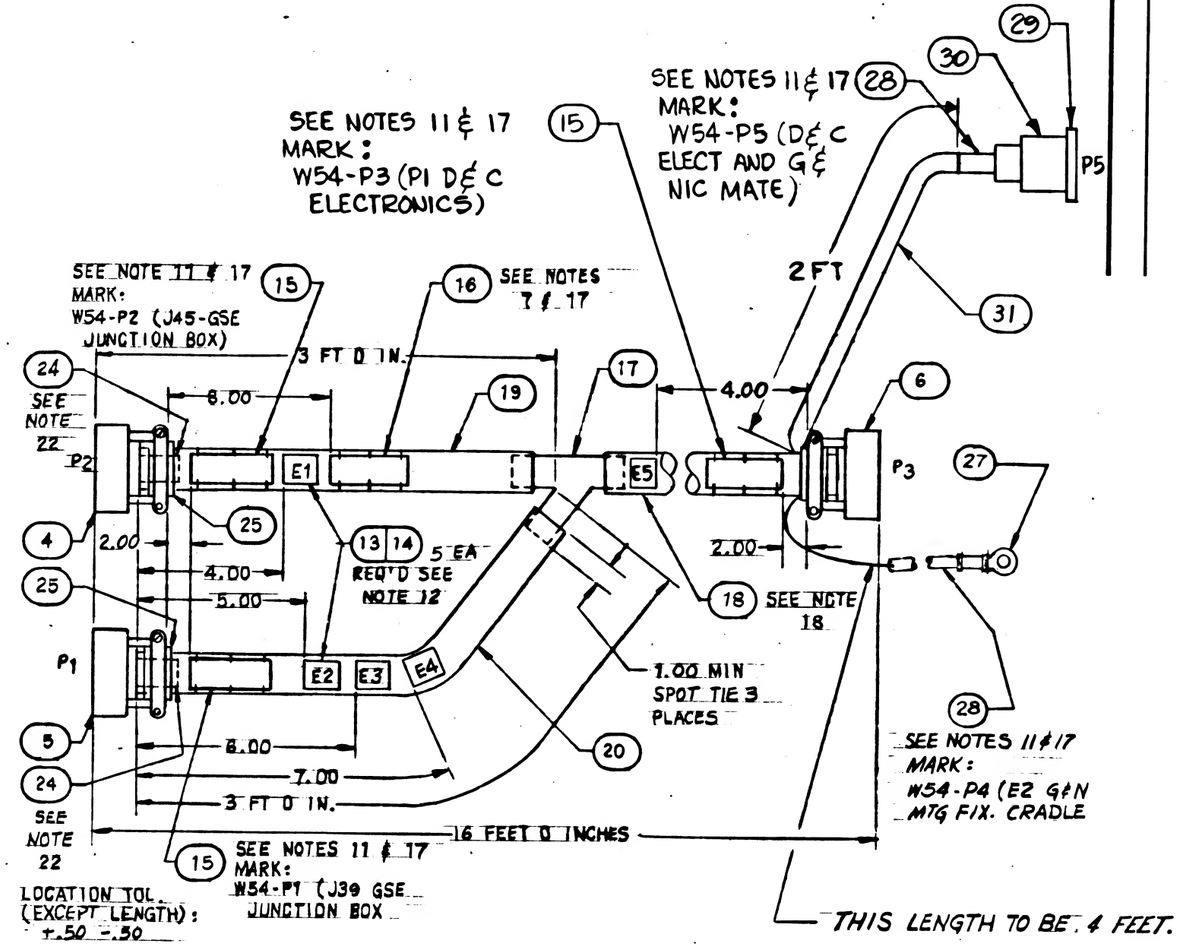

NEXT ASSY	USED ON	UNLESS OTHERWISE SPECIFIED DIMENSIONS ARE IN INCHES TOLERANCES ON FRACTIONS + − DECIMALS + − ANGLES + −	AC SPARK PLUG DIVISION, GMC MILWAUKEE, WISCONSIN	MANNED SPACECRAFT CENTER HOUSTON, TEXAS
APPLICATION		DO NOT SCALE THIS DRAWING	ACSP PN	
		MATERIAL	DRAWN KOSMATKA DATE 7 NOV 63	CABLE INTERCONNECT W54 ISS TESTING
			CHECKED MANNING 11 NOV 63	
			APPROVAL LIGON 13 NOV 63	
			APPROVAL	
			NASA APPROVAL	CODE IDENT NO. / SIZE C / 1900986
		CONTRACT NAS9-497	MIT APPROVAL	SCALE - NONE / SHEET 16 OF 16

MIL 1077C—P

1900986

APPLICATION		REVISIONS			
NEXT ASSY	USED ON	SYM	DESCRIPTION	DATE	APPROVAL
1901308	1900005-011	A	CHANGE IN ACCORDANCE WITH CM-193766 TDRR 09103	18 FEB 64	J.B. P7
		B	CHANGE IN ACCORDANCE WITH CM-197536 TDRR 12688 REVISED CUSTOMER DATA (V2-64)	27 MAY 64	BK P7
		C	CHANGE IN ACCORDANCE WITH CM 197757 TDRR 12102	9 JUL 64	HTO P7
		D	CHANGE IN ACCORDANCE WITH CM 199018 PER TDRR 12103	30 JUL 64	CMK MEM
		E	REVISED & UPGRADED TO CLASS A PER TDRR 14944	21 DEC 64	JJJ EWF
		F	REVISED PER TDRR 15991	9 FEB 65	JWD EWF
		G	REPLACED WITH CHANGE BY REV (H) PER TDRR 20916	27 JUL 65	[illegible]

(G) REPLACED WITH CHANGE BY REV (H)

REV STATUS OF SHEETS																								
REV																								
SHEET																								
REV	G	C	D	C	F	E	C	C	C	C	C	C	C	C	C	D								
SHEET	1	2	3	4	5	6	7	8	9	10	11	12	13	14	15	16								

AC SPARK PLUG DIVISION, GMC
MILWAUKEE, WISCONSIN

ACSP PN

DRAWN [illegible] DATE 7 NOV. 63
CHECKED [illegible] 11 NOV 63
APPROVAL [illegible] 13 NOV 63
APPROVAL [illegible] 1/3/64

NASA APPROVAL [illegible]
MIT APPROVAL [illegible]

CONTRACT NAS9-497

MANNED
SPACECRAFT CENTER
HOUSTON, TEXAS

CABLE INTERCONNECT W54
ISS TESTING

CODE IDENT NO.	SIZE		REV
	A	1900986	G

SCALE —

SHEET 1 OF 16

GENERAL NOTES

NOTES

1 SEE CONDUCTOR CHART

2 SEE CONDUCTOR CHART

3 INTERPRET DRAWING IN ACCORDANCE WITH STANDARDS PRESCRIBED BY MIL-D-70327.

4 MARK CONDUCTOR IDENTIFICATION ON SINGLE CONDUCTORS PER ND1002019 OMITTING ALL SUFFIX LETTERS EXCEPT A AND B.

5 SPACING OF CONDUCTOR IDENTIFICATION SHALL BE EVERY 15 INCHES MAX AND AT EACH TERMINATION.

6 SPIRALLING OF THE MARKING IS ALLOWED.

7 IDENTIFY USING DRAWING NO. AND REVISION LETTER PER MIL-STD-130 (ES-267). .12 INCH HIGH CHARACTERS BLACK.

8 Y OR N IN TINNED COLUMN INDICATES YES OR NO.

9 A LETTER WITH AN ASTERISK SUFFIX, INDICATES A LOWER CASE LETTER.

10 VENDOR ITEM - SEE SPECIFICATION CONTROL DRAWING.

11 MARK IDENTIFICATION BAND WITH REFERENCE DESIGNATION AS NOTED .12 INCH HIGH COLOR BLACK, HOT IMPRESSION STAMPING PER ND1002019. CENTRALIZE.

MANNED SPACECRAFT CENTER HOUSTON, TEXAS	SIZE A	1900986	
SCALE - NONE	REV LTR +		SHEET 2 OF 15

MIL 2084 4-63

GENERAL NOTES

NOTES

12 MARK SLEEVING WITH REFERENCE DESIGNATIONS AS SHOWN .12 INCH HIGH, COLOR BLACK PER ND1002019.

13 MARK SLEEVING OF MULTI-CONDUCTORS WITH THE CONDUCTOR NUMBER .12 INCH HIGH, COLOR BLACK, PER ND1002019 WHEN SLEEVING ITEM NUMBERS FOLLOW AN A OR T IN THE ACCESSORIES ITEM NUMBER FIELD.

14 A OR T PREFIX IN THE ACCESSORIES ITEM NUMBER COLUMN INDICATES THE READING POSITION AWAY FROM TERMINATION OR TOWARD TERMINATION RESPECTIVELY, OF THE WIRE MARKER SLEEVE.

15 THE SUFFIX LETTER OF A CONDUCTOR IDENTIFICATION NUMBER INDICATES CONDUCTOR SHIELDING, COLOR, OR MARKING.
- A - FROM END SHIELD
- L - WHITE WITH BLUE TRACER
- R - WHITE WITH RED TRACER
- W - WHITE

16 ASSEMBLE CONTACTS IN ALL CONNECTOR GROMMET HOLES.

17 SECURE TO CABLE USING ITEM 21, MARKING TO READ AWAY FROM CONNECTOR.

18 SEAL ZIPPER TUBING PER ND 1002153.

19 SERIALIZE PER ND 1002023.

MANNED SPACECRAFT CENTER HOUSTON, TEXAS	SIZE A	1900986	
SCALE - NONE	REV LTR +		SHEET 3 OF 15

MIL 2084 4-63

FOR INFORMATION ONLY

CLASS B RELEASE TDR No. 05663 DATE 1/7/69

REVISIONS

APPLICATION NEXT ASSY	USED ON	SYM	DESCRIPTION	DATE	APPROVAL
1900005-011	1900005-011		-		

REV	+	+	+	+	+	+	+	+	+	+	+	+	+	+
SHEET	1	2	3	4	5	6	7	8	9	10	11	12	13	14/15
REV STATUS														
OF SHEETS														

AC SPARK PLUG DIVISION, GMC
MILWAUKEE, WISCONSIN

ACSP PN

DRAWN T. Nemeth DATE 7 NOV. 63
CHECKED J. Kenny 11 NOV 63
APPROVAL Victor 13 NOV 63
APPROVAL L. Coleman 1/3/64

MANNED SPACECRAFT CENTER HOUSTON, TEXAS

CABLE INTERCONNECT W54
ISS TESTING

CODE IDENT NO. | SIZE A | 1900986 | REV +

NASA APPROVAL
MIT APPROVAL

CONTRACT NAS9-497 | SCALE | SHEET 1 OF 15

GENERAL NOTES

TOLERANCE CHART, UNLESS OTHERWISE SPECIFIED ---

APPLICABLE LENGTH FOR WIRE OR CABLE, STRIP WIRE, STRIP JACKET, CUT WIRE OR CUT SHIELD	TOLERANCE				
	WIRE OR CABLE	STRIP WIRE	STRIP JACKET	CUT WIRE	CUT SHIELD
UNDER 1 INCH	+ .06-.00	+.03-.00	+.06-.06	+.06-.06	+.06-.06
1 INCH TO 6 INCHES	+ .50-.00	+.06-.00	+.25-.25	+.25-.25	+.25-.25
6 INCHES TO 6 FEET	+1.00-.00		+.50-.50	+.50-.50	+.50-.50
OVER 6 FEET	+2.00-.00				

MANNED SPACECRAFT CENTER HOUSTON, TEXAS	SIZE A	1900986	
SCALE - NONE	REV LTR +		SHEET 4 OF 15

MIL 2084 4-63

INCHES 0 1 2
PHOTOGRAPHIC SCALE ONLY

LIST OF MATERIAL

SEE NOTE	ITEM	REQ'D	PART NUMBER	DESCRIPTION
	19	1	1900986-005	ZIPPER TUBING ND 1002155, TYPE 1, PLASTIC, FLEXIBLE 7/16 DIA 4 FT TOTAL LENGTH
	20	1	1900986-006	ZIPPER TUBING ND 1002155, TYPE 1, PLASTIC, FLEXIBLE 9/16 DIA 4 FT TOTAL LENGTH
	21	AR	MIL-T-713	LACING TAPE TYPE B, CLASS 2, BLACK (ES-2732 NO. 18)
10	22	108	1010464-2	CONTACT SOCKET

MANNED SPACECRAFT CENTER HOUSTON, TEXAS	SIZE A	1900986
SCALE-NONE	REV LTR +	SHEET 6 OF 15

MIL 2084 4-63

GIJ CABLE W54 + 1900986

CONDUCTOR INDIVIDUAL LENGTH NUMBER	ITEM NO. (2)	FROM CUT WIRE OR SHIELD STRIP WIRE OR JACKET CIRCUIT POINT (2)	TIN (2)	TERMINATION SPEC. (1) ITEM NO.	NO.	TO CUT WIRE OR SHIELD STRIP WIRE OR JACKET CIRCUIT POINT (2)	TIN (2)	TERMINATION SPEC (1) ITEM NO.	NO.
A 1	3	P2-H*	22N			P3- 68	22N	22	
A 2	3	P2-J*	22N			P3- 93		22	
A 3	2		230 200	7 8	5		230 200	A 12	7A
				A 11					
A 3A	3	SHLD A3	37N			E1	37N		
A 3W		P2-K*	22N			P3- 90	22N	22	
A 4	2		230 200	7 8	5		230 200	A 12	7A
				A 11					
A 4A	3	SHLD A4	37N			E1	37N		
A 4W		P2-M*	22N			P3-106	22N	22	
A 5	3	P2-N*	22N			P3- 78	22N	22	
A 6	3	P2-P*	22N			P3- 4	22N	22	
A 7	3	P2-Q*	22N			P3- 57	22N	22	
A 8	3	P2-R*	22N			P3- 12	22N	22	
A 9	3	P2-S*	22N			P3- 7	22N	22	
A 10	3	P2-T*	22N			P3- 55	22N	22	
A 11	3	P2-U*	22N			P3- 45	22N	22	
A 12	3	P2-V*	22N			P3- 65	22N	22	

(1) THE STD CONDUCTOR TERMINATION FIGURES ARE PER
(2) DIMENSIONS ARE IN INCHES AND TWO PLACE DECIMALS.

MANNED SPACECRAFT CENTER HOUSTON, TEXAS	SIZE A	1900986
SCALE-NONE	REV LTR +	SHEET 7 OF 15

MIL 2085 - 4-63 WIR

LIST OF MATERIAL

SEE NOTE	ITEM	REQ'D	PART NUMBER	DESCRIPTION
	1	1	1900986-001	WIRE ND 1002181 TYPE 2, CLASS 4, WHT JACKET, 22 AWG WHT/BLU,WHT/RED 128 FT TOTAL LENGTH
	2	1	1900986-002	WIRE ND 1002181 TYPE 1, CLASS 4, WHT JACKET, 22 AWG WHT, 256 FT TOTAL LENGTH
	3	1	1900986-003	WIRE ND 1002181 TYPE 1, CLASS 1, 22 AWG, WHT, 528 FT TOTAL LENGTH
16	4	1	MS3126F22-55SW	(1897046-551) CONNECTOR PLUG
16	5	1	MS3126F22-55PX	(1897045-552) CONNECTOR PLUG
16	6	1	1010411-1	CONNECTOR-PLUG
10	7	16	1000243-003	FERRULE, ELEC COND
10	8	16	1000242-002	FERRULE, ELEC COND
10	9	8	1000243-008	FERRULE, ELEC COND
10	10	8	1000242-007	FERRULE, ELEC COND
10	11	32	1010490-198	INSULATION-SLEEVING ELEC
10	12	16	1010490-200	INSULATION-SLEEVING ELEC
10	13	4	1010490-258	INSULATION-SLEEVING ELEC
10	14	4	1016006-002	SPLICE REDUCER
10	15	3	1016128-041	BAND-IDENTIFICATION
10	16	1	1016128-011	BAND-IDENTIFICATION
10	17	1	1016184-002	TRANSITION-HARNESS, 2 FINGER (Y)
	18	1	1900986-004	ZIPPER TUBING ND 1002155, TYPE 1, PLASTIC FLEXIBLE 11/16 DIA 13 FT TOTAL LENGTH

MANNED SPACECRAFT CENTER HOUSTON, TEXAS	SIZE A	1900986
SCALE-NONE	REV LTR +	SHEET 5 OF 15

MIL 2084 4-63

GIJ CABLE W54 + 1900986

CONDUCTOR INDIVIDUAL LENGTH NUMBER	ITEM NO. (2)	FROM CUT WIRE OR SHIELD STRIP WIRE OR JACKET CIRCUIT POINT (2)	TIN (2)	TERMINATION SPEC. (1) ITEM NO.	NO.	TO CUT WIRE OR SHIELD STRIP WIRE OR JACKET CIRCUIT POINT (2)	TIN (2)	TERMINATION SPEC (1) ITEM NO.	NO.
A 13	1		230 200	9 10	5		230 200	A 11	7A
				A 11					
A 13A	3	SHLD A13	37N			E1	37N		
A 13L		P2-X*	22N			P3- 97	22N	22	
A 13R		P2-W*	22N			P3- 96	22N	22	
A 14	1		230 200	9 10	5		230 200	A 11	7A
				A 11					
A 14A	3	SHLD A14	37N			E1	37N		
A 14L		P2-Z*	22N			P3- 11	22N	22	
A 14R		P2-Y*	22N			P3- 10	22N	22	
A 15	1		280 250	9 10	5		230 200	A 11	7A
				A 11					
A 15A	3	SHLD A15	37N			E1	37N		
A 15L		P2-CC	22N			P3- 71	22N	22	
A 15R		P2-BB	22N			P3- 70	22N	22	
A 16	1		280 250	9 10	5		280 250	A 11	5
				A 11					
A 16A	3	SHLD A16	37N			E1	37N		

(1) THE STD CONDUCTOR TERMINATION FIGURES ARE PER
(2) DIMENSIONS ARE IN INCHES AND TWO PLACE DECIMALS.

MANNED SPACECRAFT CENTER HOUSTON, TEXAS	SIZE A	1900986
SCALE-NONE	REV LTR +	SHEET 8 OF 15

MIL 2085 - 4-63 WIR

INCHES 0 1 2
PHOTOGRAPHIC SCALE ONLY

GIJ — CABLE W54 — + 1900986

CONDUCTOR NUMBER	INDIVIDUAL LENGTH ITEM NO. (2)	FROM: CUT WIRE OR SHIELD / STRIP WIRE OR JACKET / CIRCUIT POINT (2)	TIN (2)	TERMINATION SPEC. (1) ITEM NO.	NO.	TO: CUT WIRE OR SHIELD / STRIP WIRE OR JACKET / CIRCUIT POINT (2)	TIN (2)	TERMINATION SPEC (1) ITEM NO.	NO.
A 22R		P1-P	22N			P3- 1	22N	22	
A 23	1		230 200	9 10	5		230 200	A 11	7A
				A 11					
A 23A	3	SHLD A23	37N			E2	37N		
A 23L		P1-T	22N			P3- 15	22N	22	
A 23R		P1-S	22N			P3- 14	22N	22	
A 24	3	P1-U	22N			P3- 9	22N	22	
A 25	3	P1-V	22N			P3- 25	22N	22	
A 26	3	P1-W	22N			P3- 79	22N	22	
A 27	2		230 200	7 8	5		230 200	A 12	7A
				A 11					
A 27A	3	SHLD A27	37N			E2	37N		
A 27W		P1-X	22N			P3- 88	22N	22	
A 28	3	P1-Y	22N			P3- 46	22N	22	
A 29	3	P1-A*	22N			P3- 13	22N	22	
A 30	3	P1-B*	22N			P3- 6	22N	22	
A 31	3	P1-C*	22N			P3- 34	22N	22	
A 32	3	P1-Z	22N			P3- 18	22N	22	

(1) THE STD CONDUCTOR TERMINATION FIGURES ARE PER
(2) DIMENSIONS ARE IN INCHES AND TWO PLACE DECIMALS.

MANNED SPACECRAFT CENTER HOUSTON, TEXAS — SIZE A — 1900986
SCALE - NONE — REV LTR + — SHEET 10 OF 15

MIL 2085 - 4-63 WIR

GIJ — CABLE W54 — + 1900986

CONDUCTOR NUMBER	INDIVIDUAL LENGTH ITEM NO. (2)	FROM: CUT WIRE OR SHIELD / STRIP WIRE OR JACKET / CIRCUIT POINT (2)	TIN (2)	TERMINATION SPEC. (1) ITEM NO.	NO.	TO: CUT WIRE OR SHIELD / STRIP WIRE OR JACKET / CIRCUIT POINT (2)	TIN (2)	TERMINATION SPEC (1) ITEM NO.	NO.
A 16L		P2-EE	22N			P3- 83	22N	22	
A 16R		P2-DD	22N			P3- 82	22N	22	
A 17	2		280 250	7 8	5		280 250	A 12	5
				A 11					
A 17A	3	SHLD A17	37N			E1	37N		
A 17W		P2-FF	22N			P3- 76	22N	22	
A 18	3	P2-GG	22N			P3- 89	22N	22	
A 19	3	P2-B	22N			E1	22N		
A 20	3	P1-A	22N			P3- 84	22N	22	
A 21	1		230 200	9 10	5		230 200	A 11	5
				A 11					
A 21A	3	SHLD A21	37N			E2	37N		
A 21L		P1-N	22N			P3- 28	22N	22	
A 21R		P1-M	22N			P3- 29	22N	22	
A 22	1		230 200	9 10	5		230 200	A 11	7A
				A 11					
A 22A	3	SHLD A22	37N			E2	37N		
A 22L		P1-R	22N			P3- 2	22N	22	

(1) THE STD CONDUCTOR TERMINATION FIGURES ARE PER
(2) DIMENSIONS ARE IN INCHES AND TWO PLACE DECIMALS.

MANNED SPACECRAFT CENTER HOUSTON, TEXAS — SIZE A — 1900986
SCALE - NONE — REV LTR + — SHEET 9 OF 15

MIL 2085 - 4-63 WIR

GIJ — CABLE W54 — + 1900986

CONDUCTOR NUMBER	INDIVIDUAL LENGTH ITEM NO. (2)	FROM: CUT WIRE OR SHIELD / STRIP WIRE OR JACKET / CIRCUIT POINT (2)	TIN (2)	TERMINATION SPEC. (1) ITEM NO.	NO.	TO: CUT WIRE OR SHIELD / STRIP WIRE OR JACKET / CIRCUIT POINT (2)	TIN (2)	TERMINATION SPEC (1) ITEM NO.	NO.
A 33	2		280 250	7 8	5		280 250	A 12	7A
				A 11					
A 33A	3	SHLD A33	37N			E2	37N		
A 33W		P1-D*	22N			P3- 49	22N	22	
A 34	2		280 250	7 8	5		280 250	A 12	7A
				A 11					
A 34A	3	SHLD A34	37N			E2	37N		
A 34W		P1-F*	22N			P3-104	22N	22	
A 35	3	P1-G*	22N			P3- 56	22N	22	
A 36	2		280 250	7 8	5		280 250	A 12	7A
				A 11					
A 36A	3	SHLD A36	37N			E3	37N		
A 36W		P1-H*	22N			P3- 92	22N	22	
A 37	3	P1-I*	22N			P3- 35	22N	22	
A 38	3	P1-J*	22N			P3- 36	22N	22	
A 39	2		280 250	7 8	5		280 250	A 12	7A
				A 11					
A 39A	3	SHLD A39	37N			E3	37N		

(1) THE STD CONDUCTOR TERMINATION FIGURES ARE PER
(2) DIMENSIONS ARE IN INCHES AND TWO PLACE DECIMALS.

MANNED SPACECRAFT CENTER HOUSTON, TEXAS — SIZE A — 1900986
SCALE - NONE — REV LTR + — SHEET 11 OF 15

MIL 2085 - 4-63 WIR

GIJ — CABLE W54 — + 1900986

CONDUCTOR NUMBER	INDIVIDUAL LENGTH ITEM NO. (2)	FROM: CUT WIRE OR SHIELD / STRIP WIRE OR JACKET / CIRCUIT POINT (2)	TIN (2)	TERMINATION SPEC. (1) ITEM NO.	NO.	TO: CUT WIRE OR SHIELD / STRIP WIRE OR JACKET / CIRCUIT POINT (2)	TIN (2)	TERMINATION SPEC (1) ITEM NO.	NO.
A 39W		P1-K*	22N			P3-105	22N	22	
A 40	3	P1-M*	22N			P3- 37	22N	22	
A 41	3	P1-N*	22N			P3- 23	22N	22	
A 42	2		330 300	7 8	5		330 300	A 12	7A
				A 11					
A 42A	3	SHLD A42	37N			E3	37		
A 42W		P1-P*	22N			P3- 94	22	22	
A 43	2		330 300	7 8	5		330 300	A 12	7A
				A 11					
A 43A	3	SHLD A43	37N			E3	37N		
A 43W		P1-Q*	22N			P3- 22	22N	22	
A 44	3	P1-R*	22N			P3- 24	22N	22	
A 45	1		330 300	9 10	5		330 300	A 11	7A
				A 11					
A 45A	3	SHLD A45	37N			E3	37N		
A 45L		P1-T*	22N			P3- 80	22N	22	
A 45R		P1-S*	22N			P3- 95	22N	22	
A 46	3	P1-U*	22N			P3- 58	22N	22	

(1) THE STD CONDUCTOR TERMINATION FIGURES ARE PER
(2) DIMENSIONS ARE IN INCHES AND TWO PLACE DECIMALS.

MANNED SPACECRAFT CENTER HOUSTON, TEXAS — SIZE A — 1900986
SCALE - NONE — REV LTR + — SHEET 12 OF 15

MIL 2085 - 4-63 WIR

INCHES 0 1 2
PHOTOGRAPHIC SCALE ONLY

GIJ CABLE W54 + 1900986

CONDUCTOR NUMBER	INDIVIDUAL LENGTH ITEM NO. (2)		FROM CUT WIRE OR SHIELD STRIP WIRE OR JACKET CIRCUIT POINT (2)	T I N (2)	TERMINATION SPEC. (1) ITEM NO.	NO.	TO CUT WIRE OR SHIELD STRIP WIRE OR JACKET CIRCUIT POINT (2)	T I N (2)	TERMINATION SPEC (1) ITEM NO.	NO.
A 47	2		330	300	7 8	5	330	300	A 12	7A
					A 11					
A 47A	3		SHLD A47	37N			E3	37N		
A 47W			P1-V*	22N			P3-108	22N	22	
A 48	2		380	350	7 8	5	380	350	A 12	7A
					A 11					
A 48A	3		SHLD A48	37N			E4	37N		
A 48W			P1-W*	22N			P3-103	22N	22	
A 49	2		380	350	7 8	5	380	350	A 12	7A
					A 11					
A 49A	3		SHLD A49	37N			E4	37N		
A 49W			P1-X*	22N			P3- 39	22N	22	
A 50	3		P1-Y*	22N			P3- 48	22N	22	
A 51	3		P1-Z*	22N			P3- 38	22N	22	
A 52	2		380	350	7 8	5	380	350	A 12	7A
					A 11					
A 52A	3		SHLD A52	37N			E4	37N		
A 52W			P1-AA	22N			P3- 59	22N	22	

(1) THE STD CONDUCTOR TERMINATION FIGURES ARE PER
(2) DIMENSIONS ARE IN INCHES AND TWO PLACE DECIMALS.

MANNED SPACECRAFT CENTER HOUSTON, TEXAS | SIZE A | 1900986
SCALE-NONE | REV LTR + | SHEET 13 OF 15

MIL 2085 - 4-63 WIR

GIJ CABLE W54 + 1900986

CONDUCTOR NUMBER	INDIVIDUAL LENGTH ITEM NO. (2)		FROM CUT WIRE OR SHIELD STRIP WIRE OR JACKET CIRCUIT POINT (2)	T I N (2)	TERMINATION SPEC. (1) ITEM NO.	NO.	TO CUT WIRE OR SHIELD STRIP WIRE OR JACKET CIRCUIT POINT (2)	T I N (2)	TERMINATION SPEC (1) ITEM NO.	NO.
A 53	2		380	350	7 8	5	380	350	A 12	7A
					A 11					
A 53A	3		SHLD A53	37N			E4	37N		
A 53W			P1-BB	22N			P3- 91	22N	22	
A 54	3		P1-CC	22N			P3- 47	22N	22	
A 55	3		P1-DD	22N			P3- 69	22N	22	
A 56	3		P1-EE	22N			P3- 5	22N	22	
A 57	3		P1-FF	22N			P3- 27	22N	22	
A 58	2		430	400	7 8	5	430	400	A 12	7A
					A 11					
A 58A	3		SHLD A58	37N			E4	37N		
A 58W			P1-GG	22N			P3- 26	22N	22	
A 59	3		P1-B	22N			E2	37N		
A 60	3		E2	37N			E3	37N		
A 61	3		E3	37N			E4	37N		

(1) THE STD CONDUCTOR TERMINATION FIGURES ARE PER
(2) DIMENSIONS ARE IN INCHES AND TWO PLACE DECIMALS.

MANNED SPACECRAFT CENTER HOUSTON, TEXAS | SIZE A | 1900986
SCALE-NONE | REV LTR + | SHEET 14 OF 15

MIL 2085 - 4-63 WIR

PHOTOGRAPHIC SCALE ONLY 0 INCHES 10

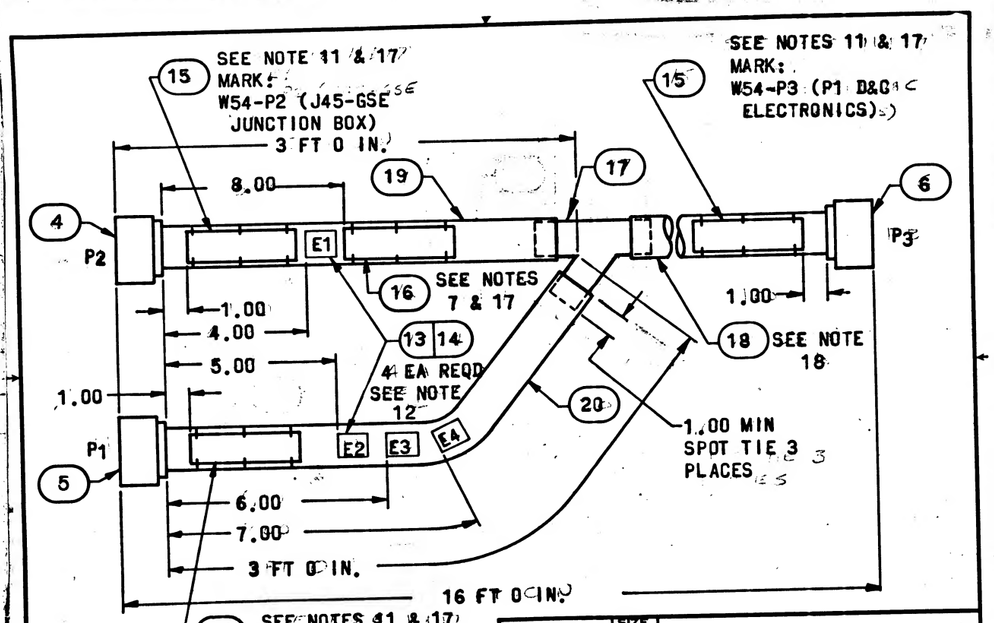

MANNED SPACECRAFT CENTER HOUSTON, TEXAS | SIZE A | 1900986
SCALE-NONE | REV LTR + | SHEET 15 OF 15

MIL 2084 4-63

GENERAL NOTES

NOTES

1 SEE CONDUCTOR CHART

2 SEE CONDUCTOR CHART

3 INTERPRET DRAWING IN ACCORDANCE WITH STANDARDS PRESCRIBED BY MIL-D-70327.

4 MARK CONDUCTOR IDENTIFICATION ON SINGLE CONDUCTORS PER ND1002019 OMITTING ALL SUFFIX LETTERS EXCEPT A AND B.

5 SPACING OF CONDUCTOR IDENTIFICATION SHALL BE EVERY 15 INCHES MAX AND AT EACH TERMINATION.

6 SPIRALLING OF THE MARKING IS ALLOWED.

7 IDENTIFY USING DRAWING NO. AND REVISION LETTER PER MIL-STD-130 (ES-267). .12 INCH HIGH CHARACTERS BLACK.

8 Y OR N IN TINNED COLUMN INDICATES YES OR NO.

9 A LETTER WITH AN ASTERISK SUFFIX, INDICATES A LOWER CASE LETTER.

10 VENDOR ITEM - SEE SPECIFICATION CONTROL DRAWING.

11 MARK IDENTIFICATION BAND WITH REFERENCE DESIGNATION AS NOTED .12 INCH HIGH COLOR BLACK, HOT IMPRESSION STAMPING PER ND1002019. CENTRALIZE.

MANNED SPACECRAFT CENTER HOUSTON, TEXAS	SIZE A	1900987	
SCALE - NONE	REV LTR +		SHEET 2 OF 11

MIL 2084 4-63

GENERAL NOTES

NOTES

12 MARK SLEEVING WITH REFERENCE DESIGNATIONS AS SHOWN .12 INCH HIGH, COLOR BLACK PER ND1002019.

13 MARK SLEEVING OF MULTI-CONDUCTORS WITH THE CONDUCTOR NUMBER .12 INCH HIGH, COLOR BLACK, PER ND1002019 WHEN SLEEVING ITEM NUMBERS FOLLOW AN A OR T IN THE ACCESSORIES ITEM NUMBER FIELD.

14 A OR T PREFIX IN THE ACCESSORIES ITEM NUMBER COLUMN INDICATES THE READING POSITION AWAY FROM TERMINATION OR TOWARD TERMINATION RESPECTIVELY, OF THE WIRE MARKER SLEEVE.

15 THE SUFFIX LETTER OF A CONDUCTOR IDENTIFICATION NUMBER INDICATES CONDUCTOR SHIELDING, COLOR, OR MARKING.

A - FROM END SHIELD
B - TO END SHIELD
L - WHITE WITH BLUE TRACER OR WHITE WITH LETTER L.
R - WHITE WITH RED TRACER OR WHITE WITH LETTER R.

16 THE FOLLOWING CONDUCTORS ARE TO BE TWISTED TOGETHER IN ACCORDANCE WITH THE BEST COMMERCIAL PRACTICE. THEY SHALL BE TWISTED WITH A LAY NOT GREATER THAN 14 TIMES NOR LESS THAN 8 TIMES THE PITCH DIAMETER AS A TWISTED GUADAUPLE: A1, A2, A3, A4

MANNED SPACECRAFT CENTER HOUSTON, TEXAS	SIZE A	1900987	
SCALE - NONE	REV LTR +		SHEET 3 OF 11

MIL 2084 4-63

FOR INFORMATION ONLY

CLASS B RELEASE TDR No. 05662 DATE 1/7/64

APPLICATION		REVISIONS			
NEXT ASSY	USED ON	SYM	DESCRIPTION	DATE	APPROVAL
1900005-011	1900005-011		-		

REV	SHEET	REV STATUS	REV	+	+	+	+	+	+	+	+	+	+
		OF SHEETS	SHEET	1	2	3	4	5	6	7	8	9	10 / 11

MANNED SPACECRAFT CENTER HOUSTON, TEXAS

CABLE INTERCONNECT W62
ISS TESTING

AC SPARK PLUG DIVISION, GMC
MILWAUKEE, WISCONSIN

ACSP PN

DRAWN Hesquist DATE 11-NOV-63
CHECKED Hal Gunn DATE 20 Nov 63
APPROVAL L. Hopkins 20 Nov 63
APPROVAL L. Gelman 1/3/64

NASA APPROVAL
MIT APPROVAL
CONTRACT NAS 9-497

CODE IDENT NO. | SIZE A | 1900987 | REV +

SCALE | SHEET 1 OF 11

GENERAL NOTES

NOTES:

17 SEAL ZIPPER TUBING PER ND 1002153

18 SECURE TO CABLE USING ITEM 14. MARKING TO READ AWAY FROM CONDUCTOR.

19 SERIALIZE PER ND 1002023

20 THIS ITEM FURNISHED WITH ITEM 6.

21 THIS ITEM FURNISHED WITH ITEM 7.

22 ASSEMBLE CONTACTS IN ALL CONNECTOR GROMMET HOLES.

TOLERANCE CHART, UNLESS OTHERWISE SPECIFIED ---

APPLICABLE LENGTH FOR WIRE OR CABLE, STRIP WIRE, STRIP JACKET, CUT WIRE OR CUT SHIELD	TOLERANCE				
	WIRE OR CABLE	STRIP WIRE	STRIP JACKET	CUT WIRE	CUT SHIELD
UNDER 1 INCH	+ .06-.00	+.03-.00	+.06-.06	+.06-.06	+.06-.06
1 INCH TO 6 INCHES	+ .50-.00	+.06-.00	+.25-.25	+.25-.25	+.25-.25
6 INCHES TO 6 FEET	+1.00-.00		+.50-.50	+.50-.50	+.50-.50
OVER 6 FEET	+2.00-.00				

MANNED SPACECRAFT CENTER HOUSTON, TEXAS	SIZE A	1900987	
SCALE - NONE	REV LTR +		SHEET 4 OF 11

MIL 2084 4-63

INCHES 0 1 2
PHOTOGRAPHIC SCALE ONLY

LIST OF MATERIAL

SEE NOTE	ITEM	REQ'D	PART NUMBER	DESCRIPTION
10	17	2	1016128-011	IDENTIFICATION BAND
	18	AR	MIL-T-713	LACING TAPE, TYPE P, CLASS 2, BLACK (ES 2732 NO.18)
	19	1	1900987-006	ZIPPER TUBING, ND 1002155, TYPE 1, PLASTIC, FLEXIBLE, 5/8 DIA X 2 FT 6 IN TOTAL LENGTH
20	20			CONNECTOR CONTACTS, PIN
21	21			CONNECTOR CONTACTS, SOCKET

MANNED SPACECRAFT CENTER HOUSTON, TEXAS	SIZE A	1900987
SCALE - NONE	REV LTR +	SHEET 6 OF 11

MIL 2084 4-63

GIS CABLE W-62 + 1900987

CONDUCTOR INDIVIDUAL LENGTH NUMBER	ITEM NO.	2	FROM CUT WIRE OR SHIELD STRIP WIRE OR JACKET CIRCUIT POINT	2	TIN	2	TERMINATION SPEC. 1 ITEM NO.			NO.	TO CUT WIRE OR SHIELD STRIP WIRE OR JACKET CIRCUIT POINT	2	TIN	2	TERMINATION SPEC 1 ITEM NO.			NO.
A 1	3		P1-U	25	N		20				P2-U	25	N		21			
A 2	3		P1-V	25	N		20				P2-V	25	N		21			
A 3	3		P1-C	25	N		20				P2-C	25	N		21			
A 4	3		P1-W	25	N		20				P2-W	25	N		21			
A 5	1			230		200	8	9	5			230		200	8	A 14	7A	
							A 14											
A 5A	4		SHLD A5	25	N						E1	37	N					
A 5W			P1-A	25	N		20				P2-A	25	N		21			
A 6	1			230		200	8	9	5			230		200	8	A 14	7A	
							A 14											
A 6A	4		SHLD A6	25	N						E1	37	N					
A 6W			P1-B	25	N		20				P2-B	25	N		21			
A 7	2			230		200	10	11	5			230		200	10	A 14	7A	
							A 14											
A 7A	4		SHLD A7	25	N						E1	37	N					
A 7L			P1-E	25	N		20				P2-E	25	N		21			
A 7R			P1-D	25	N		20				P2-D	25	N		21			
A 8	2			230		200	10	11	5			230		200	10	A 14	7A	

1 THE STD CONDUCTOR TERMINATION FIGURES ARE PER
2 DIMENSIONS ARE IN INCHES AND TWO PLACE DECIMALS.

MANNED SPACECRAFT CENTER HOUSTON, TEXAS	SIZE A	1900987
SCALE - NONE	REV LTR +	SHEET 7 OF 11

MIL 2085 - 4-63 WIR

LIST OF MATERIAL

SEE NOTE	ITEM	REQ'D	PART NUMBER	DESCRIPTION
	1	1	1900987-001	WIRE, ND 1002181, TYPE 1, CLASS 4, WHITE JACKET, 20 AWG WHITE, 5 FT 0 IN TOTAL LENGTH
	2	1	1900987-002	WIRE, ND 1002181, TYPE 2, CLASS 4, WHITE JACKET, 20 AWG WHT/BLU, WHT/RED, 14 FT 0 IN TOTAL LENGTH.
	3	1	1900987-003	WIRE, ND 1002181, TYPE 1, CLASS 1, WHITE 20 AWG, 18 FT 8 IN TOTAL LENGTH
	4	1	1900987-004	WIRE ND 1002181, TYPE 1, CLASS 1, WHITE 22 AWG, 4 FT 0 IN TOTAL LENGTH
	5	1	1900987-005	WIRE ND 1002181, TYPE 2, CLASS 1, T2, 20 AWG WHITE WITH LETTER L, WHITE WITH LETTER R, 11 FT 8 IN TOTAL LENGTH.
22	6	1	MS3126F18-32PY	(1897125-323) CONNECTOR PLUG, ELECT.
22	7	1	MS3126F18-32SY	(1897092-323) CONNECTOR PLUG, ELECT.
10	8	4	1000243-5	FERRULE, ELECT.
10	9	2	1000242-4	FERRULE, ELECT.
10	10	12	1000243-11	FERRULE, ELECT.
10	11	6	1000242-9	FERRULE, ELECT.
10	12	1	1016006-003	SPLICE REDUCER
10	13	1	1010490-256	INSULATION, SLEEVING, ELECT, HEAT SHRINK
10	14	16	1010490-198	INSULATION, SLEEVING, ELECT, HEAT SHRINK
10	15	10	1010490-200	INSULATION, SLEEVING, ELECT, HEAT SHRINK
10	16	1	1016128-041	IDENTIFICATION BAND

MANNED SPACECRAFT CENTER HOUSTON, TEXAS	SIZE A	1900987
SCALE - NONE	REV LTR +	SHEET 5 OF 11

MIL 2084 4-63

5

GIS CABLE W-62 + 1900987

CONDUCTOR INDIVIDUAL LENGTH NUMBER	ITEM NO.	2	FROM CUT WIRE OR SHIELD STRIP WIRE OR JACKET CIRCUIT POINT	2	TIN	2	TERMINATION SPEC. 1 ITEM NO.			NO.	TO CUT WIRE OR SHIELD STRIP WIRE OR JACKET CIRCUIT POINT	2	TIN	2	TERMINATION SPEC 1 ITEM NO.			NO.
							A 14											
A 8A	4		SHLD A8	25	N						E1	37	N					
A 8L			P1-G	25	N		20				P2-G	25	N		21			
A 8R			P1-F	25	N		20				P2-F	25	N		21			
A 9	2			280		250	10	11	5			280		250	10	A 14	7A	
							A 14											
A 9A	4		SHLD A9	25	N						E1	37	N					
A 9L			P1-L	25	N		20				P2-L	25	N		21			
A 9R			P1-K	25	N		20				P2-K	25	N		21			
A 10	2			280		250	10	11	5			280		250	10	A 14	7A	
							A 14											
A 10A	4		SHLD A10	25	N						E1	37	N					
A 10L			P1-H	25	N		20				P2-H	25	N		21			
A 10R			P1-J	25	N		20				P2-J	25	N		21			
A 11	2			280		250	10	11	5			280		250	10	A 14	7A	
							A 14											
A 11A	4		SHLD A11	25	N						E1	37	N					
A 11L			P1-M	25	N		20				P2-M	25	N		21			

1 THE STD CONDUCTOR TERMINATION FIGURES ARE PER
2 DIMENSIONS ARE IN INCHES AND TWO PLACE DECIMALS.

MANNED SPACECRAFT CENTER HOUSTON, TEXAS	SIZE A	1900987
SCALE - NONE	REV LTR +	SHEET 8 OF 11

MIL 2085 - 4-63 WIR

INCHES 0 1 2 PHOTOGRAPHIC SCALE ONLY

GIS CABLE W-62 + 1900987

CONDUCTOR NUMBER	INDIVIDUAL LENGTH ITEM NO. (2)	FROM: CUT WIRE OR SHIELD / STRIP WIRE OR JACKET / CIRCUIT POINT (2)	T I N (2)	TERMINATION SPEC. (1) ITEM NO.	NO.	TO: CUT WIRE OR SHIELD / STRIP WIRE OR JACKET / CIRCUIT POINT (2)	T I N (2)	TERMINATION SPEC (1) ITEM NO.	NO.
A 11R		P1-N	25N	20		P2-N	25N	21	
A 12	2		280 250	10 11 5			280 250	10 A 14 7A	
				A 14					
A 12A	4	SHLD A12	25N			E1	37N		
A 12L		P1-P	25N	20		P2-P	25N	21	
A 12R		P1-R	25N	20		P2-R	25N	21	
A 13	5			A 15				A 15	
A 13L		P1-Y	25N	20		P2-Y	25N	21	
A 13R		P1-X	25N	20		P2-X	25N	21	
A 14	5			A 15				A 15	
A 14L		P1-A*	25N	20		P2-A*	25N	21	
A 14R		P1-Z	25N	20		P2-Z	25N	21	
A 15	5			A 15				A 15	
A 15L		P1-C*	25N	20		P2-C*	25N	21	
A 15R		P1-B*	25N	20		P2-B*	25N	21	
A 16	3	P1-H*	25N	20		P2-H*	25N	21	
A 17	3	P1-J*	25N	20		P2-J*	25N	21	
A 18	5			A 15				A 15	

(1) THE STD CONDUCTOR TERMINATION FIGURES ARE PER
(2) DIMENSIONS ARE IN INCHES AND TWO PLACE DECIMALS.

MANNED SPACECRAFT CENTER HOUSTON, TEXAS | SIZE A | 1900987
SCALE - NONE | REV LTR + | SHEET 9 OF 11

MIL 2085 - 4-63 WIR

GIS CABLE W-62 + 1900987

CONDUCTOR NUMBER	INDIVIDUAL LENGTH ITEM NO. (2)	FROM: CUT WIRE OR SHIELD / STRIP WIRE OR JACKET / CIRCUIT POINT (2)	T I N (2)	TERMINATION SPEC. (1) ITEM NO.	NO.	TO: CUT WIRE OR SHIELD / STRIP WIRE OR JACKET / CIRCUIT POINT (2)	T I N (2)	TERMINATION SPEC (1) ITEM NO.	NO.
A 18L		P1-E*	25N	20		P2-E*	25N	21	
A 18R		P1-D*	25N	20		P2-D*	25N	21	
A 19	5			A 15				A 15	
A 19L		P1-G*	25N	20		P2-G*	25N	21	
A 19R		P1-F*	25N	20		P2-F*	25N	21	
A 20	3	P1-S	25N	20		E1	37N		
A 21	3	P1-T	25N	20		P2-T	25N	21	

(1) THE STD CONDUCTOR TERMINATION FIGURES ARE PER
(2) DIMENSIONS ARE IN INCHES AND TWO PLACE DECIMALS.

MANNED SPACECRAFT CENTER HOUSTON, TEXAS | SIZE A | 1900987
SCALE - NONE | REV LTR + | SHEET 10 OF 11

MIL 2085 - 4-63 WIR

PHOTOGRAPHIC SCALE ONLY
0 1 2 INCHES

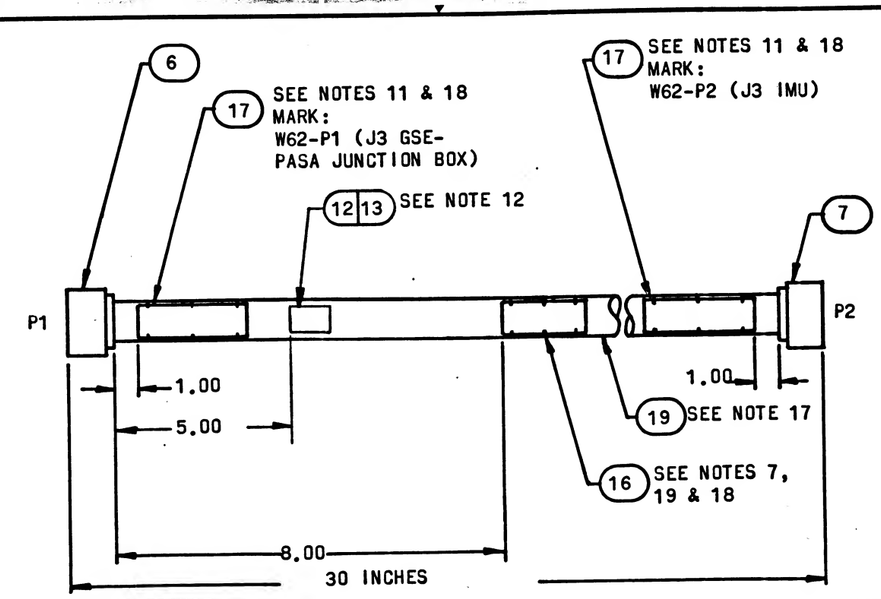

LOCATION TOLERANCE (EXCEPT LENGTH):
+.50
-.50

MANNED SPACECRAFT CENTER HOUSTON, TEXAS | SIZE A | 1900987
SCALE - NONE | REV LTR + | SHEET 11 OF 11

MIL 2084 4-63

CONDUCTOR NUMBER	INDIVIDUAL LENGTH ITEM NO.	[2]		FROM CUT WIRE OR SHIELD STRIP WIRE OR JACKET CIRCUIT POINT	[2]	TIN	[2]	TERMINATION SPEC. [1] ITEM NO.	NO.	TO CUT WIRE OR SHIELD STRIP WIRE OR JACKET CIRCUIT POINT	[2]	TIN	[2]	TERMINATION SPEC [1] ITEM NO.	NO.
A 7A	1			SHLD A7	37	N				E1	37	N			
A 7L				P1-J	22	N		27		P3- 12	22	N		22	
A 7R				P1-H	22	N		27		P3- 11	22	N		22	
A 8	5							A 29						A 29	
A 8L				P1-L	22	N		27		P3- 40	22	N		22	
A 8R				P1-K	22	N		27		P3- 41	22	N		22	
A 9	1			P1-N	22	N		27		P3- 43	22	N		22	
A 10	1			P1-P	22	N		27		P3- 71	22	N		22	
A 11	3				230		200	11 12	5		230		200	A 16	7A
								A 16							
A 11A	1			SHLD A11	37	N				E1	37	N			
A 11L				P1-S	22	N		27		P3- 53	22	N		22	
A 11R				DELETED											
A 12	3				230		200	11 12	5		230		200	A 16	7A
								A 16							
A 12A	1			SHLD A12	37	N				E1	37	N			
A 12L				P1-U	22	N		27		P3- 52	22	N		22	
A 12R				DELETED											

[1] THE STD CONDUCTOR TERMINATION FIGURES ARE PER
[2] DIMENSIONS ARE IN INCHES AND TWO PLACE DECIMALS.

MANNED SPACECRAFT CENTER HOUSTON, TEXAS | SIZE A | 1900998
SCALE - NONE | REV LTR J | SHEET 9 OF 23

MIL 2085 - 4-63 WIR

CONDUCTOR NUMBER	INDIVIDUAL LENGTH ITEM NO.	[2]		FROM CUT WIRE OR SHIELD STRIP WIRE OR JACKET CIRCUIT POINT	[2]	TIN	[2]	TERMINATION SPEC. [1] ITEM NO.	NO.	TO CUT WIRE OR SHIELD STRIP WIRE OR JACKET CIRCUIT POINT	[2]	TIN	[2]	TERMINATION SPEC [1] ITEM NO.	NO.
A 13	1			P1-V	22	N		27		P3- 1	22	N		22	
A 14	1			P1-W	22	N		27		P3- 60	22	N		22	
A 15				DELETED											
A 16	1			P1-Y	22	N		27		P3- 96	22	N		22	
A 17	1			P1-Z	22	N		27		P3- 95	22	N		22	
A 18	1			P1-A*	22	N		27		E4	37	N			
A 19	1			P1-B*	22	N		27		P3- 93	22	N		22	
A 20	1			P1-C*	22	N		27		P3- 51	22	N		22	
A 21	1			P1-D*	22	N		27		P3-106	22	N		22	
A 22	1			P1-E*	22	N		27		P3- 77	22	N		22	
A 23	1			P1-F*	22	N		27		P3- 65	22	N		22	
A 24	2				280		250	9 10	5		280		250	A 17	7A
								A 16							
A 24A	1			SHLD A24	37	N				E2	37	N			
A 24W				P1-G*	22	N		27		P3- 85	22	N		22	
A 25	2				280		250	9 10	5		280		250	A 17	7A
								A 16							
A 25A	1			SHLD A25	37	N				E2	37	N			

[1] THE STD CONDUCTOR TERMINATION FIGURES ARE PER
[2] DIMENSIONS ARE IN INCHES AND TWO PLACE DECIMALS.

MANNED SPACECRAFT CENTER HOUSTON, TEXAS | SIZE A | 1900998
SCALE - NONE | REV LTR J | SHEET 10 OF 23

MIL 2085 - 4-63 WIR

CONDUCTOR NUMBER	INDIVIDUAL LENGTH ITEM NO.	[2]		FROM CUT WIRE OR SHIELD STRIP WIRE OR JACKET CIRCUIT POINT	[2]	TIN	[2]	TERMINATION SPEC. [1] ITEM NO.	NO.	TO CUT WIRE OR SHIELD STRIP WIRE OR JACKET CIRCUIT POINT	[2]	TIN	[2]	TERMINATION SPEC [1] ITEM NO.	NO.
A 1	1			P4- 1	25	N		33		P3- 91	22	N		22	
A 2				DELETED											
				DELETED											
A 2A				DELETED											
A 2L				DELETED											
A 2R				DELETED											
A 3				DELETED											
				DELETED											
A 3A				DELETED											
A 3W				DELETED											
A 4	2				230		200	9 10	5		230		200	A 17	7A
								A 16							
A 4A	1			SHLD A4	37	N				E1	37	N			
A 4W				P1-E	22	N		27		P3- 54	22	N		22	
A 5	1			P1-F	22	N		27		P3- 26	22	N		22	
A 6	1			P1-G	22	N		27		P3- 83	22	N		22	
A 7	3				230		200	11 12	5		230		200	A 16	7A
								A 16							

[1] THE STD CONDUCTOR TERMINATION FIGURES ARE PER
[2] DIMENSIONS ARE IN INCHES AND TWO PLACE DECIMALS.

MANNED SPACECRAFT CENTER HOUSTON, TEXAS | SIZE A | 1900998
SCALE - NONE | REV LTR J | SHEET 8 OF 23

MIL 2085 - 4-63 WIR

CONDUCTOR NUMBER	INDIVIDUAL LENGTH ITEM NO.	[2]		FROM CUT WIRE OR SHIELD STRIP WIRE OR JACKET CIRCUIT POINT	[2]	TIN	[2]	TERMINATION SPEC. [1] ITEM NO.	NO.	TO CUT WIRE OR SHIELD STRIP WIRE OR JACKET CIRCUIT POINT	[2]	TIN	[2]	TERMINATION SPEC [1] ITEM NO.	NO.
A 25W				P1-H*	22	N		27		P3- 98	22	N		22	
A 26	1			P1-I*	22	N		27		P3- 42	22	N		22	
A 27	5							A 29						A 29	
A 27L				P1-K*	22	N		27		P3- 69	22	N		22	
A 27R				P1-J*	22	N		27		P3- 80	22	N		22	
A 28	2				280		250	9 10	5		280		250	A 17	7A
								A 16							
A 28A	1			SHLD A28	37	N				E2	37	N			
A 28W				P1-M*	22	N		27		P3- 92	22	N		22	
A 29	2				280		250	9 10	5		280		250	A 17	7A
								A 16							
A 29A	1			SHLD A29	37	N				E2	37	N			
A 29W				P1-N*	22	N		27		P3- 74	22	N		22	
A 30	2				280		250	9 10	5		280		250	A 17	7A
								A 16							
A 30A	1			SHLD A30	37	N				E2	37	N			
A 30W				P1-P*	22	N		27		P3- 90	22	N		22	
A 31	2				280		250	9 10	5		280		250	A 17	7A

[1] THE STD CONDUCTOR TERMINATION FIGURES ARE PER
[2] DIMENSIONS ARE IN INCHES AND TWO PLACE DECIMALS.

MANNED SPACECRAFT CENTER HOUSTON, TEXAS | SIZE A | 1900998
SCALE - NONE | REV LTR J | SHEET 11 OF 23

MIL 2085 - 4-63 WIR

GENERAL NOTES

NOTES

1 SEE CONDUCTOR CHART

2 SEE CONDUCTOR CHART

3 INTERPRET DRAWING IN ACCORDANCE WITH STANDARDS PRESCRIBED BY MIL-D-70327.

4 MARK CONDUCTOR IDENTIFICATION ON SINGLE CONDUCTORS PER ND1002019 OMITTING ALL SUFFIX LETTERS EXCEPT A AND B.

5 SPACING OF CONDUCTOR IDENTIFICATION SHALL BE EVERY 15 INCHES MAX AND AT EACH TERMINATION.

6 SPIRALLING OF THE MARKING IS ALLOWED.

7 IDENTIFY USING DRAWING NO. AND REVISION LETTER PER MIL-STD-130 (ES-267). .12 INCH HIGH CHARACTERS BLACK.

8 Y OR N IN TINNED COLUMN INDICATES YES OR NO.

9 A LETTER WITH AN ASTERISK SUFFIX, INDICATES A LOWER CASE LETTER.

10 VENDOR ITEM - SEE SPECIFICATION CONTROL DRAWING.

11 MARK IDENTIFICATION BAND WITH REFERENCE DESIGNATION AS NOTED .12 INCH HIGH COLOR BLACK, HOT IMPRESSION STAMPING PER ND1002019. CENTRALIZE.

MANNED SPACECRAFT CENTER HOUSTON, TEXAS	SIZE A	1900988	
SCALE - NONE	REV LTR +		SHEET 2 OF 10

MIL 2084 4-63

GENERAL NOTES

NOTES

12 MARK SLEEVING WITH REFERENCE DESIGNATIONS AS SHOWN .12 INCH HIGH, COLOR BLACK PER ND1002019.

13 MARK SLEEVING OF MULTI-CONDUCTORS WITH THE CONDUCTOR NUMBER .12 INCH HIGH, COLOR BLACK, PER ND1002019 WHEN SLEEVING ITEM NUMBERS FOLLOW AN A OR T IN THE ACCESSORIES ITEM NUMBER FIELD.

14 A OR T PREFIX IN THE ACCESSORIES ITEM NUMBER COLUMN INDICATES THE READING POSITION AWAY FROM TERMINATION OR TOWARD TERMINATION RESPECTIVELY, OF THE WIRE MARKER SLEEVE.

15 THE SUFFIX LETTER OF A CONDUCTOR IDENTIFICATION NUMBER INDICATES CONDUCTOR SHIELDING, COLOR, OR MARKING.
- A - FROM END SHIELD
- L - WHITE WITH BLUE TRACER OR WHITE WITH LETTER L
- R - WHITE WITH RED TRACER OR WHITE WITH LETTER R
- Y - WHITE WITH YELLOW TRACER

16 ASSEMBLE CONTACTS IN ALL CONNECTOR GROMMET HOLES

17 THE FOLLOWING CONDUCTORS ARE TO BE TWISTED TOGETHER IN ACCORDANCE WITH THE BEST COMMERCIAL PRACTICE. THEY SHALL BE TWISTED WITH A LAY NOT GREATER THAN 14 TIMES NOR LESS THAN 8 TIMES THE PITCH DIAMETER AS A TWISTED QUADRUPLE, A10, A11, A12, AND A13.

18 SECURE TO CABLE USING ITEM 15, MARKING TO READ AWAY FROM CONNECTOR

19 SEAL ZIPPER TUBING PER ND 1002153

20 SERIALIZE PER ND 1002023

21 ITEM 17 FURNISHED WITH ITEM 5

22 ITEM 18 FURNISHED WITH ITEM 6

MANNED SPACECRAFT CENTER HOUSTON, TEXAS	SIZE A	1900988	
SCALE - NONE	REV LTR +		SHEET 3 OF 10

MIL 2084 4-63

FOR INFORMATION ONLY

CLASS B RELEASE TDR No. 03663 DATE 1/7/64

REVISIONS

APPLICATION NEXT ASSY	USED ON	SYM	DESCRIPTION	DATE	APPROVAL
1900005-011	1900005-011				

REV	+	+	+	+	+	+	+	+	+	+
SHEET	1	2	3	4	5	6	7	8	9	10

REV STATUS + OF SHEETS 10

AC SPARK PLUG DIVISION, GMC
MILWAUKEE, WISCONSIN

ACSP PN

DRAWN 13 NOV 63
CHECKED 20 NOV 63
APPROVAL 20 NOV 63
APPROVAL 1/3/64

NASA APPROVAL
MIT APPROVAL

CONTRACT NAS 9-497

MANNED SPACECRAFT CENTER HOUSTON, TEXAS

CABLE INTERCONNECT W63
1SS TESTING

CODE IDENT NO. | SIZE A | 1900988 | REV +

SCALE NONE | SHEET 1 OF 10

GENERAL NOTES

TOLERANCE CHART, UNLESS OTHERWISE SPECIFIED ---

APPLICABLE LENGTH FOR WIRE OR CABLE, STRIP WIRE, STRIP JACKET, CUT WIRE OR CUT SHIELD	TOLERANCE				
	WIRE OR CABLE	STRIP WIRE	STRIP JACKET	CUT WIRE	CUT SHIELD
UNDER 1 INCH	+ .06-.00	+.03-.00	+.06-.06	+.06-.06	+.06-.06
1 INCH TO 6 INCHES	+ .50-.00	+.06-.00	+.25-.25	+.25-.25	+.25-.25
6 INCHES TO 6 FEET	+1.00-.00		+.50-.50	+.50-.50	+.50-.50
OVER 6 FEET	+2.00-.00				

MANNED SPACECRAFT CENTER HOUSTON, TEXAS	SIZE A	1900988	
SCALE - NONE	REV LTR +		SHEET 4 OF 10

MIL 2084 4-63

INCHES 0 1 2
PHOTOGRAPHIC SCALE ONLY

LIST OF MATERIAL

SEE NOTE	ITEM	REQ'D	PART NUMBER	DESCRIPTION
	15	AR	MIL-T-713	LACING TAPE, TYPE P, CLASS 2, BLACK (ES 2732 NO.18)
	16	1	1900988-005	ZIPPER TUBING ND 1002155
21	17	32		CONNECTOR CONTACT, PIN
22	18	32		CONNECTOR CONTACT, SOCKET

MANNED SPACECRAFT CENTER HOUSTON, TEXAS	SIZE A	1900988
SCALE - NONE	REV LTR +	SHEET 6 OF 10

MIL 2084 4-63

LIST OF MATERIAL

SEE NOTE	ITEM	REQ'D	PART NUMBER	DESCRIPTION
	1	1	1900988-001	WIRE, ND 1002181, TYPE 3, CLASS 4, WHT JAKT 20 AWG WHT/BLU, WHT/RED, WHT/YEL 15 FT. 0 IN TOTAL LENGTH.
	2	1	1900988-002	WIRE, ND 1002181, TYPE 2, CLASS 1, 20 AWG WHITE WITH LETTER L, WHITE WITH LETTER R, 7 FT 8 IN TOTAL LENGTH.
	3	1	1900988-003	WIRE, ND 1002181, TYPE 1, CLASS 1, 20 AWG WHITE 15 FT 0 IN TOTAL LENGTH.
	4	1	1900988-004	WIRE, ND 1002181, TYPE 1, CLASS 1, 22 AWG WHITE 3 FT, 0 IN TOTAL LENGTH
16	5	1	MS3126F18-32PZ	(1897125-324) CONNECTOR PLUG, ELEC.
16	6	1	MS3126F18-32SZ	(1897092-324) CONNECTOR PLUG, ELEC.
10	7	12	1000243-15	FERRULE, ELEC.
10	8	6	1000242-16	FERRULE, ELEC.
10	9	12	1010490-196	INSULATION, SLEEVING ELEC.
10	10	8	1010490-200	INSULATION, SLEEVING ELEC.
10	11	1	1016006-002	SPLICE REDUCER
10	12	1	1010490-258	INSULATION, SLEEVING ELEC.
10	13	2	1016128-011	IDENTIFICATION BAND
10	14	1	1016128-041	IDENTIFICATION BAND

MANNED SPACECRAFT CENTER HOUSTON, TEXAS	SIZE A	1900988
SCALE - NONE	REV LTR +	SHEET 5 OF 10

MIL 2084 4-63

GJB CABLE W63 + 1900988

CONDUCTOR INDIVIDUAL LENGTH NUMBER	ITEM NO. (2)	FROM CUT WIRE OR SHIELD STRIP WIRE OR JACKET CIRCUIT POINT	(2)	TIN (2)	TERMINATION SPEC. (1) ITEM NO.	NO.	TO CUT WIRE OR SHIELD STRIP WIRE OR JACKET CIRCUIT POINT	(2)	TIN (2)	TERMINATION SPEC (1) ITEM NO.	NO.
A 1	1		230	200	7 8 5 A 9			230	200	7 A 9 7A	
A 1A	4	SHLD A1	25N				E1	37N			
A 1L		P1-B	25N		17		P2-B	25N		18	
A 1R		P1-A	25N		17		P2-A	25N		18	
A 1Y		P1-C	25N		17		P2-C	25N		18	
A 2	1		230	200	7 8 5 A 9			230	200	7 A 9 7A	
A 2A	4	SHLD A2	25N				E1	37N			
A 2L		P1-E	25N		17		P2-E	25N		18	
A 2R		P1-D	25N		17		P2-D	25N		18	
A 2Y		P1-F	25N		17		P2-F	25N		18	
A 3	1		230	200	7 8 5 A 9			230	200	7 A 9 7A	
A 3A	4	SHLD A3	25N				E1	37N			
A 3L		P1-H	25N		17		P2-H	25N		18	
A 3R		P1-G	25N		17		P2-G	25N		18	
A 3Y		P1-J	25N		17		P2-J	25N		18	

(1) THE STD CONDUCTOR TERMINATION FIGURES ARE PER
(2) DIMENSIONS ARE IN INCHES AND TWO PLACE DECIMALS.

MANNED SPACECRAFT CENTER HOUSTON, TEXAS	SIZE A	1900988
SCALE - NONE	REV LTR +	SHEET 7 OF 10

MIL 2085 - 4-63 WIR

GJB CABLE W63 + 1900988

CONDUCTOR INDIVIDUAL LENGTH NUMBER	ITEM NO. (2)	FROM CUT WIRE OR SHIELD STRIP WIRE OR JACKET CIRCUIT POINT	(2)	TIN (2)	TERMINATION SPEC. (1) ITEM NO.	NO.	TO CUT WIRE OR SHIELD STRIP WIRE OR JACKET CIRCUIT POINT	(2)	TIN (2)	TERMINATION SPEC (1) ITEM NO.	NO.
A 4	1		230	200	7 8 5 A 9			230	200	7 A 9 7A	
A 4A	4	SHLD A4	25N				E1	37N			
A 4L		P1-L	25N		17		P2-L	25N		18	
A 4R		P1-K	25N		17		P2-K	25N		18	
A 4Y		P1-M	25N		17		P2-M	25N		18	
A 5	1		280	250	7 8 5 A 9			280	250	7 A 9 7A	
A 5A	4	SHLD A5	25N				E1	37N			
A 5L		P1-P	25N		17		P2-P	25N		18	
A 5R		P1-N	25N		17		P2-N	25N		18	
A 5Y		P1-R	25N		17		P2-R	25N		18	
A 6	1		280	250	7 8 5 A 9			280	250	7 A 9 7A	
A 6A	4	SHLD A6	25N				E1	37N			
A 6L		P1-V	25N		17		P2-V	25N		18	
A 6R		P1-U	25N		17		P2-U	25N		18	
A 6Y		P1-W	25N		17		P2-W	25N		18	

(1) THE STD CONDUCTOR TERMINATION FIGURES ARE PER
(2) DIMENSIONS ARE IN INCHES AND TWO PLACE DECIMALS.

MANNED SPACECRAFT CENTER HOUSTON, TEXAS	SIZE A	1900988
SCALE - NONE	REV LTR +	SHEET 8 OF 10

MIL 2085 - 4-63 WIR

INCHES 0 1 2
PHOTOGRAPHIC SCALE ONLY

GJB CABLE W63 + 1900988

CONDUCTOR INDIVIDUAL LENGTH NUMBER	ITEM NO. (2)	FROM CUT WIRE OR SHIELD STRIP WIRE OR JACKET CIRCUIT POINT (2)	TIN (2)	TERMINATION SPEC. (1) ITEM NO.	NO.	TO CUT WIRE OR SHIELD STRIP WIRE OR JACKET CIRCUIT POINT (2)	TIN (2)	TERMINATION SPEC (1) ITEM NO.	NO.
A 7	2			A 10				A 10	
A 7L		P1-Y	25N	17		P2-Y	25N	18	
A 7R		P1-X	25N	17		P2-X	25N	18	
A 8	2			A 10				A 10	
A 8L		P1-A*	25N	17		P2-A*	25N	18	
A 8R		P1-Z	25N	17		P2-Z	25N	18	
A 9	2			A 10				A 10	
A 9L		P1-C*	25N	17		P2-C*	25N	18	
A 9R		P1-B*	25N	17		P2-B*	25N	18	
A 10	3	P1-F*	25N	17		P2-F*	25N	18	
A 11	3	P1-G*	25N	17		P2-G*	25N	18	
A 12	3	P1-H*	25N	17		P2-H*	25N	18	
A 13	3	P1-J*	25N	17		P2-J*	25N	18	
A 14	3	P1-D*	25N	17		E1	37N		
A 15	2			A 10				A 10	
A 15L		P1-T	25N	17		P2-T	25N	18	
A 15R		P1-S	25N	17		P2-S	25N	18	
A 16	3	P1-E*	25N	17		P2-E*	25N	18	

(1) THE STD CONDUCTOR TERMINATION FIGURES ARE PER
(2) DIMENSIONS ARE IN INCHES AND TWO PLACE DECIMALS.

MANNED SPACECRAFT CENTER HOUSTON, TEXAS | SIZE A | 1900988
SCALE - NONE | REV LTR + | SHEET 9 OF 10

MIL 2085 - 4-63 WIR

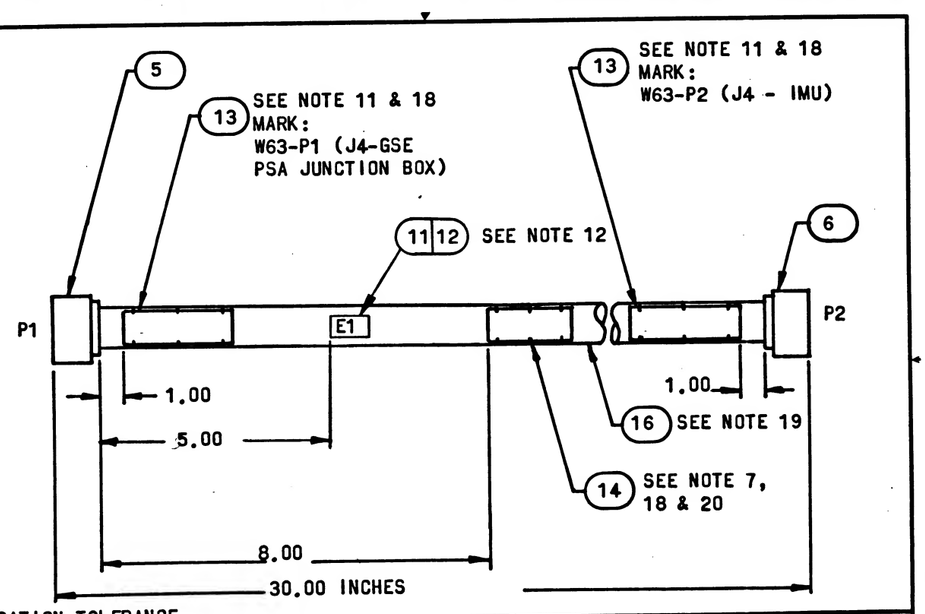

LOCATION TOLERANCE (EXCEPT LENGTH)
+.50
-.50

MANNED SPACECRAFT CENTER HOUSTON, TEXAS | SIZE A | 1900988
SCALE - NONE | REV LTR + | SHEET 10 OF 10

MIL 2084 4-63

PHOTOGRAPHIC SCALE ONLY
INCHES 0 1 2

GENERAL NOTES

NOTES

1 SEE CONDUCTOR CHART
2 SEE CONDUCTOR CHART
3 INTERPRET DRAWING IN ACCORDANCE WITH STANDARDS PRESCRIBED BY MIL-D-70327.
4 MARK CONDUCTOR IDENTIFICATION ON SINGLE CONDUCTORS PER ND1002019 OMITTING ALL SUFFIX LETTERS EXCEPT A AND B.
5 SPACING OF CONDUCTOR IDENTIFICATION SHALL BE EVERY 15 INCHES MAX AND AT EACH TERMINATION.
6 SPIRALLING OF THE MARKING IS ALLOWED.
7 IDENTIFY USING DRAWING NO. AND REVISION LETTER PER MIL-STD-130 (ES-267). .12 INCH HIGH CHARACTERS BLACK.
8 Y OR N IN TINNED COLUMN INDICATES YES OR NO.
9 A LETTER WITH AN ASTERISK SUFFIX, INDICATES A LOWER CASE LETTER.
10 VENDOR ITEM - SEE SPECIFICATION CONTROL DRAWING.
11 MARK IDENTIFICATION BAND WITH REFERENCE DESIGNATION AS NOTED .12 INCH HIGH COLOR BLACK, HOT IMPRESSION STAMPING PER ND1002019. CENTRALIZE.

MANNED SPACECRAFT CENTER HOUSTON, TEXAS	SIZE A	1900989	
SCALE - NONE	REV LTR +		SHEET 2 OF 12

MIL 2084 4-63

GENERAL NOTES

NOTES

12 MARK SLEEVING WITH REFERENCE DESIGNATIONS AS SHOWN .12 INCH HIGH, COLOR BLACK PER ND1002019.
13 MARK SLEEVING OF MULTI-CONDUCTORS WITH THE CONDUCTOR NUMBER .12 INCH HIGH, COLOR BLACK, PER ND1002019 WHEN SLEEVING ITEM NUMBERS FOLLOW AN A OR T IN THE ACCESSORIES ITEM NUMBER FIELD.
14 A OR T PREFIX IN THE ACCESSORIES ITEM NUMBER COLUMN INDICATES THE READING POSITION AWAY FROM TERMINATION OR TOWARD TERMINATION RESPECTIVELY, OF THE WIRE MARKER SLEEVE.
15 THE SUFFIX LETTER OF A CONDUCTOR IDENTIFICATION NUMBER INDICATES CONDUCTOR SHIELDING, COLOR, OR MARKING.
   A - FROM END SHIELD
   L - WHITE WITH BLUE TRACER OR WHITE WITH LETTER L
   R - WHITE WITH RED TRACER OR WHITE WITH LETTER R
16 ASSEMBLE CONTACTS IN ALL CONNECTOR GROMMET HOLES.
17 SECURE TO CABLE USING ITEM 14, MARKING TO READ AWAY FROM CONNECTOR.
18 SEAL ZIPPER TUBING PER ND 1002153.
19 SERIALIZE PER ND 1002023
20 ITEM 17 FURNISHED WITH ITEM 5.
21 ITEM 18 FURNISHED WITH ITEM 6.

MANNED SPACECRAFT CENTER HOUSTON, TEXAS	SIZE A	1900989	
SCALE - NONE	REV LTR +		SHEET 3 OF 12

MIL 2084 4-63

FOR INFORMATION ONLY

CLASS B RELEASE TDR No. 05663 DATE 1/7/64

REVISIONS

DESCRIPTION	DATE	APPROVAL

APPLICATION

NEXT ASSY	USED ON	SYM
1900005-011	1900005-011	

REV	SHEET	REV STATUS	REV	OF SHEETS	SHEET 1	2	3	4	5	6	7	8	9	10	11	12
			+		+	+	+	+	+	+	+	+	+	+	+	+

MANNED SPACECRAFT CENTER HOUSTON, TEXAS

CABLE INTERCONNECT W60
ISS TESTING

AC SPARK PLUG DIVISION, GMC
MILWAUKEE, WISCONSIN

ACSP PN

DRAWN T. Kopecek DATE 4 NOV 63
CHECKED 26 NOV 63
APPROVAL D. Abraham 20 NOV 63
APPROVAL L. Gelman 1/3/64

CODE IDENT NO. | SIZE A | 1900989 | REV +

NASA APPROVAL
MIT APPROVAL

CONTRACT NAS 9-497 | SCALE NONE | SHEET 1 OF 12

GENERAL NOTES

TOLERANCE CHART, UNLESS OTHERWISE SPECIFIED ---

APPLICABLE LENGTH FOR WIRE OR CABLE, STRIP WIRE, STRIP JACKET, CUT WIRE OR CUT SHIELD	TOLERANCE				
	WIRE OR CABLE	STRIP WIRE	STRIP JACKET	CUT WIRE	CUT SHIELD
UNDER 1 INCH	+ .06-.00	+.03-.00	+.06-.06	+.06-.06	+.06-.06
1 INCH TO 6 INCHES	+ .50-.00	+.06-.00	+.25-.25	+.25-.25	+.25-.25
6 INCHES TO 6 FEET	+1.00-.00		+.50-.50	+.50-.50	+.50-.50
OVER 6 FEET	+2.00-.00				

MANNED SPACECRAFT CENTER HOUSTON, TEXAS	SIZE A	1900989	
SCALE - NONE	REV LTR +		SHEET 4 OF 12

MIL 2084 4-63

INCHES 0 1 2
PHOTOGRAPHIC SCALE ONLY

LIST OF MATERIAL

SEE NOTE	ITEM	REQ'D	PART NUMBER	DESCRIPTION
10	15	4	1010490-200	INSULATION SLEEVING ELECT
	16	1	1900989-005	ZIPPER TUBING, ND 1002155, TYPE 1 PLASTIC FLEXIBLE 3/4 DIA. 1 FT. 3 IN. TOTAL LENGTH.
20	17	32		CONNECTOR CONTACT, PIN
21	18	32		CONNECTOR CONTACT, SOCKET

MANNED SPACECRAFT CENTER HOUSTON, TEXAS	SIZE A	1900989
SCALE-NONE	REV LTR +	SHEET 6 OF 12

MIL 2084 4-63

GJC CABLE W60 + 1900989

CONDUCTOR INDIVIDUAL LENGTH NUMBER	ITEM NO. [2]	FROM CUT WIRE OR SHIELD STRIP WIRE OR JACKET CIRCUIT POINT	[2]	TIN [2]	TERMINATION SPEC. [1] ITEM NO.	NO.	TO CUT WIRE OR SHIELD STRIP WIRE OR JACKET CIRCUIT POINT	[2]	TIN [2]	TERMINATION SPEC [1] ITEM NO.	NO.
A 1	1				A 15					A 15	
A 1L		P1-A	25N		17		P2-A	25N		18	
A 1R		P1-B	25N		17		P2-B	25N		18	
A 2	2		230	200	7 8	5		230	200	7 A 9 7A	
					A 9						
A 2A	4	SHLD A2	25N				E1	37N			
A 2L		P1-D	25N		17		P2-D	25N		18	
A 2R		P1-C	25N		17		P2-C	25N		18	
A 3	2		230	200	7 8	5		230	200	7 A 9 7A	
					A 9						
A 3A	4	SHLD A3	25N				E1	37N			
A 3L		P1-F	25N		17		P2-F	25N		18	
A 3R		P1-E	25N		17		P2-E	25N		18	
A 4	2		230	200	7 8	5		230	200	7 A 9 7A	
					A 9						
A 4A	4	SHLD A4	25N				E1	25N			
A 4L		P1-H	25N		17		P2-H	25N		18	
A 4R		P1-G	25N		17		P2-G	25N		18	

[1] THE STD CONDUCTOR TERMINATION FIGURES ARE PER
[2] DIMENSIONS ARE IN INCHES AND TWO PLACE DECIMALS.

MANNED SPACECRAFT CENTER HOUSTON, TEXAS	SIZE A	1900989
SCALE-NONE	REV LTR +	SHEET 7 OF 12

MIL 2085 - 4-63 WIR

LIST OF MATERIAL

SEE NOTE	ITEM	REQ'D	PART NUMBER	DESCRIPTION
	1	1	1900989-001	WIRE ND 1002181, TYPE 2, CLASS 1, 20 AWG WHITE WITH LETTER L, WHITE WITH LETTER R, 2 FT 6 INCHES TOTAL LENGTH.
	2	1	1900989-002	WIRE ND 1002181, TYPE 2, CLASS 4, WHT JAKT, 20 AWG, WHT/BLU, WHT/RED, 15 FT, 5 INCHES TOTAL LENGTH.
	3	1	1900989-003	WIRE ND 1002181, TYPE 1, CLASS 1, 20 AWG WHITE 2 FT, 0 IN, TOTAL LENGTH.
	4	1	1900989-004	WIRE ND 1002181, TYPE 1 CLASS 1, 22 AWG, WHITE, 8 FT, 0 IN, TOTAL LENGTH.
16	5	1	MS3126F18-32P	(1897125-320) CONNECTOR PLUG, ELECT
16	6	1	MS3126F18-32S	(1897092-320) CONNECTOR PLUG, ELECT
10	7	26	1000243-11	FERRULE, ELECT.
10	8	13	1000242-9	FERRULE, ELECT.
10	9	26	1010490-198	INSULATION SLEEVING, ELECT.
10	10	2	1016006-002	SPLICE REDUCER
10	11	2	1010490-258	INSULATION SLEEVING, ELECT.
10	12	2	1016128-011	IDENTIFICATION BAND
10	13	1	1016128-041	IDENTIFICATION BAND
	14	AR	MIL-T-713	LACING TAPE TYPE P, CLASS 2 BLACK (ES 2732 NO,18)

MANNED SPACECRAFT CENTER HOUSTON, TEXAS	SIZE A	1900989
SCALE-NONE	REV LTR +	SHEET 5 OF 12

MIL 2084 4-63

5

GJC CABLE W60 + 1900989

CONDUCTOR INDIVIDUAL LENGTH NUMBER	ITEM NO. [2]	FROM CUT WIRE OR SHIELD STRIP WIRE OR JACKET CIRCUIT POINT	[2]	TIN [2]	TERMINATION SPEC. [1] ITEM NO.	NO.	TO CUT WIRE OR SHIELD STRIP WIRE OR JACKET CIRCUIT POINT	[2]	TIN [2]	TERMINATION SPEC [1] ITEM NO.	NO.
A 5	2		230	200	7 8	5		230	200	7 A 9 7A	
					A 9						
A 5A	4	SHLD A5	25N				E1	37N			
A 5L		P1-K	25N		17		P2-K	25N		18	
A 5R		P1-J	25N		17		P2-J	25N		18	
A 6	2		280	250	7 8	5		280	250	7 A 9 7A	
					A 9						
A 6A	4	SHLD A6	25N				E1	37N			
A 6L		P1-M	25N		17		P2-M	25N		18	
A 6R		P1-L	25N		17		P2-L	25N		18	
A 7	2		280	250	7 8	5		280	250	7 A 9 7A	
					A 9						
A 7A	4	SHLD A7	25N				E1	37N			
A 7L		P1-N	25N		17		P2-N	25N		18	
A 7R		P1-P	25N		17		P2-P	25N		18	
A 8	2		280	250	7 8	5		280	250	7 A 9 7A	
					A 9						
A 8A	4	SHLD A8	25N				E1	37N			

[1] THE STD CONDUCTOR TERMINATION FIGURES ARE PER
[2] DIMENSIONS ARE IN INCHES AND TWO PLACE DECIMALS.

MANNED SPACECRAFT CENTER HOUSTON, TEXAS	SIZE A	1900989
SCALE-NONE	REV LTR +	SHEET 8 OF 12

MIL 2085 - 4-63 WIR

INCHES 0 1 2
PHOTOGRAPHIC SCALE ONLY

GJC CABLE W60 + 1900989

CONDUCTOR NUMBER	INDIVIDUAL LENGTH ITEM NO.	2	FROM CUT WIRE OR SHIELD STRIP WIRE OR JACKET / CIRCUIT POINT	2	TIN	2	TERMINATION SPEC. 1 ITEM NO.	NO.	TO CUT WIRE OR SHIELD STRIP WIRE OR JACKET / CIRCUIT POINT	2	TIN	2	TERMINATION SPEC 1 ITEM NO.	NO.
A 12L			P1-S	25N			17		P2-S	25N			18	
A 12R			P1-R	25N			17		P2-R	25N			18	
A 13	2			330		300	7 8 5			330		300	7 A 9 7A	
							A 9							
A 13A	4		SHLD A13	25N					E2	37N				
A 13L			P1-U	25N			17		P2-U	25N			18	
A 13R			P1-T	25N			17		P2-T	25N			18	
A 14	3		P1-D*	25N			17		E2	37N			18	
A 15	2			330		300	7 8 5			330		300	7 A 9 7A	
							A 9							
A 15A	4		SHLD A15	25N					E2	37N				
A 15L			P1-E*	25N			17		P2-E*	25N			18	
A 15R			P1-C*	25N			17		P2-C*	25N			18	
A 16	2			380		350	7 8 5			380		350	7 A 9 7A	
							A 9							
A 16A	4		SHLD A16	25N					E2	37N				
A 16L			P1-J*	25N			17		P2-J*	25N			18	
A 16R			P1-H*	25N			17		P2-H*	25N			18	

1 THE STD CONDUCTOR TERMINATION FIGURES ARE PER
2 DIMENSIONS ARE IN INCHES AND TWO PLACE DECIMALS.

MANNED SPACECRAFT CENTER HOUSTON, TEXAS | SIZE A | 1900989
SCALE - NONE | REV LTR + | SHEET 10 OF 12

MIL 2085 - 4-63 WIR

GJC CABLE W60 + 1900989

CONDUCTOR NUMBER	INDIVIDUAL LENGTH ITEM NO.	2	FROM CUT WIRE OR SHIELD STRIP WIRE OR JACKET / CIRCUIT POINT	2	TIN	2	TERMINATION SPEC. 1 ITEM NO.	NO.	TO CUT WIRE OR SHIELD STRIP WIRE OR JACKET / CIRCUIT POINT	2	TIN	2	TERMINATION SPEC 1 ITEM NO.	NO.
A 17	3		P1-V	25N			17		P2-V	25N			18	
A 18	3		E1	37N					E2	37N				

1 THE STD CONDUCTOR TERMINATION FIGURES ARE PER
2 DIMENSIONS ARE IN INCHES AND TWO PLACE DECIMALS.

MANNED SPACECRAFT CENTER HOUSTON, TEXAS | SIZE A | 1900989
SCALE - NONE | REV LTR + | SHEET 11 OF 12

MIL 2085 - 4-63 WIR

GJC CABLE W60 + 1900989

CONDUCTOR NUMBER	INDIVIDUAL LENGTH ITEM NO.	2	FROM CUT WIRE OR SHIELD STRIP WIRE OR JACKET / CIRCUIT POINT	2	TIN	2	TERMINATION SPEC. 1 ITEM NO.	NO.	TO CUT WIRE OR SHIELD STRIP WIRE OR JACKET / CIRCUIT POINT	2	TIN	2	TERMINATION SPEC 1 ITEM NO.	NO.
A 8L			P1-X	25N			17		P2-X	25N			18	
A 8R			P1-W	25N			17		P2-W	25N			18	
A 9	2			280		250	7 8 5			280		250	7 A 9 7A	
							A 9							
A 9A	4		SHLD A9	25N					E2	37N				
A 9L			P1-Z	25N			17		P2-Z	25N			18	
A 9R			P1-Y	25N			17		P2-Y	25N			18	
A 10	2			330		300	7 8 5			330		300	7 A 9 7A	
							A 9							
A 10A	4		SHLD A10	25N					E2	37N				
A 10L			P1-B*	25N			17		P2-B*	25N			18	
A 10R			P1-A*	25N			17		P2-A*	25N			18	
A 11	2			330		300	7 8 5			330		300	7 A 9 7A	
							A 9							
A 11A	4		SHLD A11	25N					E2	37N				
A 11L			P1-F*	25N			17		P2-F*	25N			18	
A 11R			P1-G*	25N			17		P2-G*	25N			18	
A 12	1						A 15						A 15	

1 THE STD CONDUCTOR TERMINATION FIGURES ARE PER
2 DIMENSIONS ARE IN INCHES AND TWO PLACE DECIMALS.

MANNED SPACECRAFT CENTER HOUSTON, TEXAS | SIZE A | 1900989
SCALE - NONE | REV LTR + | SHEET 9 OF 12

MIL 2085 - 4-63 WIR

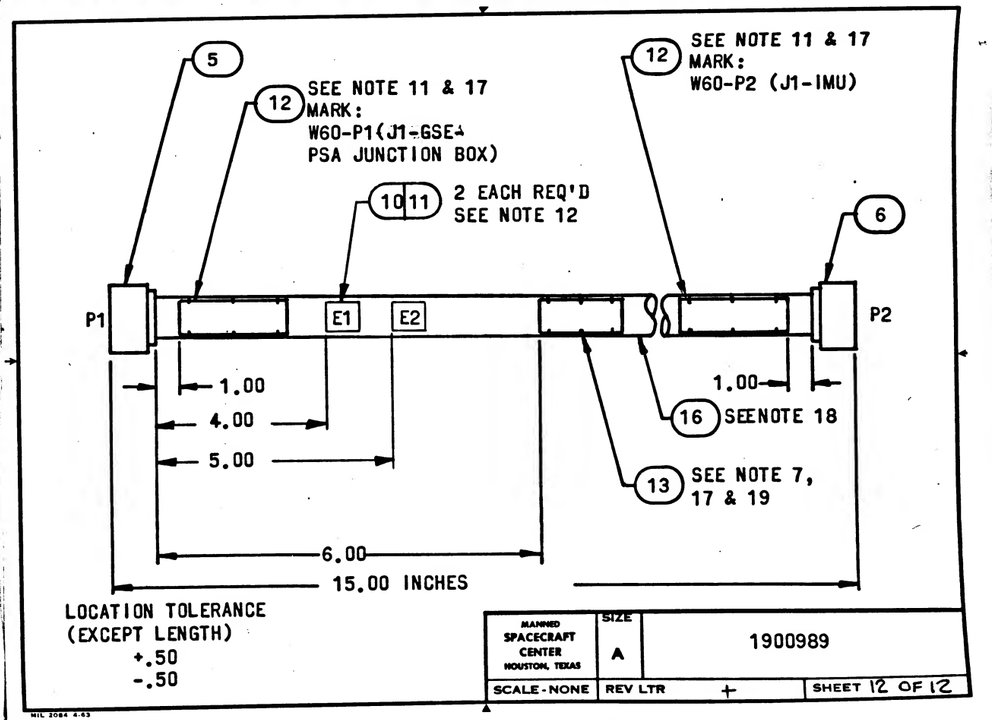

MANNED SPACECRAFT CENTER HOUSTON, TEXAS | SIZE A | 1900989
SCALE - NONE | REV LTR + | SHEET 12 OF 12

MIL 2084 4-63

INCHES 0 1 2
PHOTOGRAPHIC SCALE ONLY

PENNANT NOTE	GENERAL NOTES
1	SEE CONDUCTOR CHART, PENNANT NOTE 1.
2	SEE CONDUCTOR CHART, PENNANT NOTE 2.
3	INTERPRET DRAWING IN ACCORDANCE WITH STANDARDS PRESCRIBED BY MIL-D-70327.
4	MARK CONDUCTOR IDENTIFICATION ON SINGLE CONDUCTORS PER ND1002019 OMITTING ALL SUFFIX LETTERS EXCEPT A AND B.
5	SPACING OF CONDUCTOR IDENTIFICATION SHALL BE EVERY 15 INCHES MAX AND AT EACH TERMINATION.
6	SPIRALLING OF THE MARKING IS ALLOWED.
7	IDENTIFY USING DRAWING NO. AND REVISION LETTER PER MIL-STD-130 (ES-267). .12 INCH HIGH CHARACTERS WHITE.
8	Y OR N IN TINNED COLUMN INDICATES YES OR NO.
9	A LETTER WITH AN ASTERISK SUFFIX INDICATES A LOWER CASE LETTER.
10	VENDOR ITEM - SEE SPECIFICATION CONTROL DRAWING.
11	MARK IDENTIFICATION BAND WITH REFERENCE DESIGNATION AS NOTED .12 INCH HIGH COLOR WHITE, HOT IMPRESSION STAMPING PER ND1002019. CENTRALIZE.
12	MARK SLEEVING WITH REFERENCE DESIGNATIONS AS SHOWN .12 INCH HIGH, COLOR BLACK PER ND1002019.
13	MARK SLEEVING OF MULTI-CONDUCTORS WITH THE CONDUCTOR NUMBER .12 INCH HIGH, COLOR BLACK, PER ND1002019 WHEN SLEEVING ITEM NUMBERS FOLLOW AN A OR T IN THE ACCESSORIES ITEM NUMBER FIELD.

MANNED SPACECRAFT CENTER HOUSTON, TEXAS	SIZE A	1900990
SCALE-NONE	REV LTR C	SHEET 2 OF 13

MIL 2084 4-63

PENNANT NOTE	GENERAL NOTES
	THE READING POSITION AWAY FROM TERMINATION OR TOWARD TERMINATION RESPECTIVELY, OF THE WIRE MARKER SLEEVE.
15	THE SUFFIX LETTER OF A CONDUCTOR IDENTIFICATION NUMBER INDICATES CONDUCTOR SHIELDING, COLOR, OR MARKING. A - FROM END SHIELD L - WHITE WITH BLUE TRACER R - WHITE WITH RED TRACER Y - WHITE WITH YELLOW TRACER W - WHITE
16	ASSEMBLE CONTACT IN ALL CONNECTOR GROMMET HOLES
17	SECURE TO CABLE USING ITEM 21, MARKING TO READ AWAY FROM CONNECTOR.
18	SEAL ZIPPER TUBING PER ND1002153.
19	SERIALIZE PER ND1002023
20	DELETE
21	ITEM 22 FURNISHED WITH ITEM 5
22	ITEM 23 SHALL BE SHORTENED WHEN NECESSARY TO AVOID INTERFERENCE WITH FERRULES AND MAY BE CUT LENGTHWISE ON ONE SIDE. SELECT ONE OR MORE OF ITEM 23 AS REQUIRED TO FIT.

MANNED SPACECRAFT CENTER HOUSTON, TEXAS	SIZE A	1900990
SCALE-NONE	REV LTR A	SHEET 3 OF 13

MIL 2084 4-63

PENNANT NOTE	GENERAL NOTES

TOLERANCE CHART, UNLESS OTHERWISE SPECIFIED —

APPLICABLE LENGTH FOR WIRE OR CABLE, STRIP WIRE, STRIP JACKET, CUT WIRE OR CUT SHIELD.	TOLERANCE				
	WIRE OR CABLE	WIRE	STRIP JACKET	WIRE	CUT SHIELD
UNDER 1 INCH	+ .06-.00	+.03-.00	+.06-.06	+.06-.06	+.06-.06
1 INCH TO 6 INCHES	+ .50-.00	+.06-.00	+.25-.25	+.25-.25	+.25-.25
6 INCHES TO 6 FEET	+1.00-.00		+.50-.50	+.50-.50	+.50-.50
OVER 6 FEET	+2.00-.00				

MANNED SPACECRAFT CENTER HOUSTON, TEXAS	SIZE A	1900990
SCALE-NONE	REV LTR A	SHEET 4 OF 13

MIL 2084 4-63

APPLICATION

NEXT ASSY	USED ON
1900990	1900005-011

REVISIONS

SYM	DESCRIPTION	DATE	APPROVAL
A	CHANGE IN ACCORDANCE WITH CM193770 TDRR 09032	14 FEB 64	JJJ
B	CHANGE IN ACCORDANCE WITH CM 195638	17 MAR 64	
C	CHANGE IN ACCORDANCE WITH CM196629 REVISED CUSTOMER DATA (V2-64) REVISED PER TDRR 09033	20 APR 64	MB
D (4)	CHANGE IN ACCORDANCE WITH CM197543 TDRR 10681 REVISED CUSTOMER DATA V2-64	22 MAY 64	RB
E (5)	CHANGE IN ACCORDANCE WITH CM 197758 TDRR 13173	23 JUN 64	JJJ
F (6)	CHANGE IN ACCORDANCE WITH TDR 199019 TDRR 11224	20 JULY 64	JW

FOR INFORMATION ONLY

CLASS B RELEASE TDR No. 05663 DATE 1/7/64

REV	A	A	D	+	F	B	+	D	E	F
SHEET	1	2	3	4	5	6	7	8	9	10

REV STATUS REV
OF SHEETS SHEET 1 2 3 4 5 6 7 8 9 10 11 12 13

AC SPARK PLUG DIVISION, GMC
MILWAUKEE, WISCONSIN

ACSP PN

MANNED SPACECRAFT CENTER HOUSTON, TEXAS

CABLE INTERCONNECT W47
ISS, OSS TESTING

DRAWN DATE 19 NOV 63
CHECKED 20 NOV 63
APPROVAL
APPROVAL

NASA APPROVAL
MIT APPROVAL

CONTRACT NAS 9-497

CODE IDENT NO. SIZE A 1900990 REV E

SCALE NONE SHEET 1 OF 13

INCHES 0 1 2 3 4 5 6 7 8 9 10 11 12 13 14 15 16 17 18 19 20 21 22 23 24 25 26 27 28 29 30 31 32 33 34 35 36 37 38 39

GJD CABLE W-47 D 1900990

PENNANT LIST OF MATERIALS

NOTE	ITEM	QTY	PART NO	DESCRIPTION
10	17	3	1016006-002	SPLICE REDUCER
10	18	1	1016128-011	BAND IDENTIFICATION
10	19	2	1016128-041	BAND IDENTIFICATION
	20	1	1900990-005	ZIPPER TUBING, ND1002155, TYPE 1, PLASTIC, FLEXIBLE 1.00 DIA. 16 FT TOTAL LENGTH.
	21	AR	MIL-T-713	LACING TAPE, TYPE P, CLASS 2, BLACK (ES-2732 NO. 18)
21	22	61		CONNECTOR CONTACT, PIN
22	23	AR		1897147-106, 108, 112, CABLE CLAMP SLEEVE
10	24	1	1016282-024	RUBBER GROMMET
10	25	1	1015902- 46	TERMINAL LUG
	26	1	1900990-006	TUBING, MODIFIED POLYVINYL CHRORIDE FLEXIBLE, SHRINK-FIT PER 1016197-006 6 INCH TOTAL LENGTH

MANNED SPACECRAFT CENTER HOUSTON, TEXAS | SIZE A | 1900990
SCALE-NONE | REV LTR D | SHEET 6 OF 13

MIL 2084 4-63

GJD CABLE W47 + 1900990

CONDUCTOR NUMBER	INDIVIDUAL LENGTH ITEM NO.	[2]		FROM CUT WIRE OR SHIELD STRIP WIRE OR JACKET CIRCUIT POINT	[2]	T I N	[2]	TERMINATION SPEC. [1] ITEM NO.			NO.	TO CUT WIRE OR SHIELD STRIP WIRE OR JACKET CIRCUIT POINT	[2]	T I N	[2]	TERMINATION SPEC [1] ITEM NO.			NO.
A 1	4			P1-Z	22N							P2- 30	22N						
A 2	2				230		200	11	12		5		230		200	A	15		7A
								A	14										
A 2A	4			SHLD A2	37N							E1	37N						
A 2W				P1-B*	22N			22				P2- 12	22N			16			
A 3	1				230		200	8	7		5		230		200	A	14		7A
								A	14										
A 3A	4			SHLD A3	37N							E1	37N						
A 3L				P1-D*	22N			22				P2- 14	22N			16			
A 3R				P1-C*	22N			22				P2- 1	22N			16			
A 4	4			P1-DD	22N			22				P2- 15	22N			16			
A 5	1				230		200	8	7		5		230		200	A	14		7A
								A	14										
A 5A	4			SHLD A5	37N							E1	37N						
A 5L				P1-F*	22N			22				P2- 57	22N			16			
A 5R				P1-E*	22N			22				P2- 67	22N			16			
A 6	1				230		200	8	7		5		230		200	A	14		7A
								A	14										

[1] THE STD CONDUCTOR TERMINATION FIGURES ARE PER
[2] DIMENSIONS ARE IN INCHES AND TWO PLACE DECIMALS.

MANNED SPACECRAFT CENTER HOUSTON, TEXAS | SIZE A | 1900990
SCALE-NONE | REV LTR + | SHEET 7 OF 13

MIL 2088 - 4-63 WIR

GJD CABLE W-47 A 1900990

PENNANT LIST OF MATERIALS

NOTE	ITEM	QTY	PART NO	DESCRIPTION
	1	1	1900990-001	WIRE ND1002181 TYPE 2, CLASS 4, WHT JAKT, 22AWG WHT/BLU. WHT/RED, 176 FT. TOTAL LENGTH.
	2	1	1900990-002	WIRE ND1002181 TYPE 1, CLASS 4, WHT JAKT, 22AWG WHITE 80 FT. TOTAL LENGTH.
	3	1	1900990-003	WIRE ND1002181 TYPE 3, CLASS 4, WHT JAKT, 22AWG WHT/BLU. WHT/RED, WHT/YEL, 48 FT. TOTAL LENGTH.
	4	1	1900990-004	WIRE ND1002181 TYPE 1, CLASS 1, 22AWG WHT, 75 FT. TOTAL LENGTH
16	5	1	MS3126F-24-61PX (1897047-612)	CONNECTOR PLUG
16,10	6	1	1010411-002	CONNECTOR
10	7	11	1000243-008	FERRULE ELECT. COND.
10	8	11	1000242-007	FERRULE ELECT. COND.
10	9	3	1000243-011	FERRULE ELECT. COND.
10	10	3	1000242-011	FERRULE ELECT. COND.
10	11	5	1000243-003	FERRULE ELECT. COND.
10	12	5	1000242-002	FERRULE ELECT. COND.
10	13	3	1010490-258	INSULATION SLEEVING ELECT.
10	14	33	1010490-198	INSULATION SLEEVING ELECT.
10	15	5	1010490-200	INSULATION SLEEVING ELECT.
10	16	108	1010464-002	CONNECTOR CONTACT, SOCKET

MANNED SPACECRAFT CENTER HOUSTON, TEXAS | SIZE A | 1900990
SCALE-NONE | REV LTR A | SHEET 5 OF 13

MIL 2084 4-63

GJD CABLE W-47 F 1900990

CONDUCTOR NUMBER	INDIVIDUAL LENGTH ITEM NO.	[2]		FROM CUT WIRE OR SHIELD STRIP WIRE OR JACKET CIRCUIT POINT	[2]	T I N	[2]	TERMINATION SPEC. [1] ITEM NO.			NO.	TO CUT WIRE OR SHIELD STRIP WIRE OR JACKET CIRCUIT POINT	[2]	T I N	[2]	TERMINATION SPEC [1] ITEM NO.			NO.
A 6A	4			SHLD A6	37N							E1	37N						
A 6L				P1-H*	22N			22				P2- 45	22N			16			
A 6R				P1-G*	22N			22				P2- 35	22N			16			
A 7	2				280		250	11	12		5		280		250	A	15		7A
								A	14										
A 7A	4			SHLD A7	37N							E1	37N						
A 7W				P1-I*	22N			22				P2- 34	22N			16			
A 8	1				280		250	8	7		5		280		250	A	14		7A
								A	14										
A 8A	4			SHLD A8	37N							E1	37						
A 8L				P1-K*	22N			22				P2- 6	22N			16			
A 8R				P1-J*	22N			22				P2- 20	22N			16			
A 9	1				280		250	8	7		5		280		250	A	14		7A
								A	14										
A 9A	4			SHLD A9	37N							E2	37N						
A 9L				P1-N*	22N			22				P2- 7	22N			16			
A 9R				P1-M*	22N			22				P2- 21	22N			16			
A 10	1				280		250	8	7		5		280		250	A	14		7A

[1] THE STD CONDUCTOR TERMINATION FIGURES ARE PER
[2] DIMENSIONS ARE IN INCHES AND TWO PLACE DECIMALS.

MANNED SPACECRAFT CENTER HOUSTON, TEXAS | SIZE A | 1900990
SCALE-NONE | REV LTR F | SHEET 8 OF 13

MIL 2088 - 4-63 WIR

INCHES 0 1 2

GJD CABLE W47 + 1900990

CONDUCTOR INDIVIDUAL LENGTH NUMBER	ITEM NO.	2	FROM CUT WIRE OR SHIELD STRIP WIRE OR JACKET CIRCUIT POINT	2	T I N	2	TERMINATION SPEC. 1 ITEM NO.				NO.	TO CUT WIRE OR SHIELD STRIP WIRE OR JACKET CIRCUIT POINT	2	T I N	2	TERMINATION SPEC 1 ITEM NO.				NO.
A 13R			P1-V*	22N			22					P2-107	22N			16				
A 13Y			P1-X*	22N			22					P2- 94	22N			16				
A 14	1			330	300		8	7		5			330	300		A	14		7A	
							A	14												
A 14A	4		SHLD A14	37N								E2	37N							
A 14L			P1-Z*	22N			22					P2- 50	22N			16				
A 14R			P1-Y*	22N			22					P2- 60	22N			16				
A 15	1			380	350		8	7		5			380	350		A	14		7A	
							A	14												
A 15A	4		SHLD A15	37N								E3	37N							
A 15L			P1-CC	22N			22					P2- 2	22N			16				
A 15R			P1-BB	22N			22					P2- 3	22N			16				
A 16	4		P1-AA	22N			22					P2- 16	22N			16				
A 17	3			380	350		9	10		5			380	350		A	14		7A	
							A	14												
A 17A	4		SHLD A17	37N								E3	37N							
A 17L			P1-FF	22N			22					P2-105	22N			16				
A 17R			P1-EE	22N			22					P2- 92	22N			16				

1 THE STD CONDUCTOR TERMINATION FIGURES ARE PER
2 DIMENSIONS ARE IN INCHES AND TWO PLACE DECIMALS.

MANNED SPACECRAFT CENTER HOUSTON, TEXAS | SIZE A | 1900990
SCALE-NONE | REV LTR + | SHEET 10 OF 13

MIL 2088 - 4-63 WIR

GJD CABLE W-47 D 1900990

CONDUCTOR INDIVIDUAL LENGTH NUMBER	ITEM NO.	2	FROM CUT WIRE OR SHIELD STRIP WIRE OR JACKET CIRCUIT POINT	2	T I N	2	TERMINATION SPEC. 1 ITEM NO.				NO.	TO CUT WIRE OR SHIELD STRIP WIRE OR JACKET CIRCUIT POINT	2	T I N	2	TERMINATION SPEC 1 ITEM NO.				NO.
A 17Y			P1-GG	22N			22					P2-106	22N			16				
A 18	3			380	350		9	10		5			380	350		A	14		7A	
							A	14												
A 18A	4		SHLD A18	37N								E3	37N							
A 18L			P1-JJ	22N			22					P2- 31	22N			16				
A 18R			P1-HH	22N			22					P2- 32	22N			16				
A 18Y			P1-KK	22N			22					P2- 43	22N			16				
A 19	1			380	350		8	7		5			380	350		A	14		7A	
							A	14												
A 19A	4		SHLD A19	37N								E3	37N							
A 19L			P1-MM	22N			22					P2- 29	22N			16				
A 19R			P1-LL	22N			22					P2- 28	22N			16				
A 20	4		P3- 1	25N			25					P2- 41	22N			16				
A 21	2			430	400		11	12		5			430	400		A	15		7A	
							A	14												
A 21A	4		SHLD A21	37N								E3	37N							
A 21W			P1-NN	22N			22					P2- 11	22N			16				
A 22	2			430	400		11	12		5			430	400		A	15		7A	

1 THE STD CONDUCTOR TERMINATION FIGURES ARE PER
2 DIMENSIONS ARE IN INCHES AND TWO PLACE DECIMALS.

MANNED SPACECRAFT CENTER HOUSTON, TEXAS | SIZE A | 1900990
SCALE-NONE | REV LTR D | SHEET 11 OF 13

MIL 2088 - 4-63 WIR

GJD CABLE W-47 B 1900990

CONDUCTOR INDIVIDUAL LENGTH NUMBER	ITEM NO.	2	FROM CUT WIRE OR SHIELD STRIP WIRE OR JACKET CIRCUIT POINT	2	T I N	2	TERMINATION SPEC. 1 ITEM NO.				NO.	TO CUT WIRE OR SHIELD STRIP WIRE OR JACKET CIRCUIT POINT	2	T I N	2	TERMINATION SPEC 1 ITEM NO.				NO.
							A	14												
A 10A	4		SHLD A10	37N								E2	37N							
A 10L			P1-Q*	22N			22					P2- 90	22N			16				
A 10R			P1-P*	22N			22					P2-104	22N			16				
A 11	1			330	300		8	7		5			330	300		A	14		7A	
							A	14												
A 11A	4		SHLD A11	37N								E2	37N							
A 11L			P1-S*	22N			22					P2- 86	22N			16				
A 11R			P1-R*	22N			22					P2-100	22N			16				
A 12	1			330	300		8	7		5			330	300		A	14		7A	
							A	14												
A 12A	4		SHLD A12	37N								E2	37N							
A 12L			P1-U*	22N			22					P2- 87	22N			16				
A 12R			P1-T*	22N			22					P2-101	22N			16				
A 13	3			330	300		9	10		5			330	300		A	14		7A	
							A	14												
A 13A	4		SHLD A13	37N								P1-C	22N							
A 13L			P1-W*	22N			22					P2-108	22N			16				

1 THE STD CONDUCTOR TERMINATION FIGURES ARE PER
2 DIMENSIONS ARE IN INCHES AND TWO PLACE DECIMALS.

MANNED SPACECRAFT CENTER HOUSTON, TEXAS | SIZE A | 1900990
SCALE-NONE | REV LTR B | SHEET 9 OF 13

MIL 2088 - 4-63 WIR

GJD CABLE W-47 E 1900990

CONDUCTOR INDIVIDUAL LENGTH NUMBER	ITEM NO.	2	FROM CUT WIRE OR SHIELD STRIP WIRE OR JACKET CIRCUIT POINT	2	T I N	2	TERMINATION SPEC. 1 ITEM NO.				NO.	TO CUT WIRE OR SHIELD STRIP WIRE OR JACKET CIRCUIT POINT	2	T I N	2	TERMINATION SPEC 1 ITEM NO.				NO.
							A	14												
A 22A	4		SHLD A22	37N								E3	37N							
A 22W			P1-PP	22N			22					P2- 29	22N			16				
A 23	4		P1-B	22N			22					E1	37N							
A 24	4		E1	37N								E2	37N							
A 25	4		E2	37N								E3	37N							
A 26	2			430	400		11	12		5			430	400		A	15		7A	
							A	14												
A 26A	4		SHLD A26	37								E3	37N							
A 26W			P1-A*	22			22					P2- 89	22N			16				
A 27	4		P1-D	22N			22					P1-E	22N			22				

1 THE STD CONDUCTOR TERMINATION FIGURES ARE PER
2 DIMENSIONS ARE IN INCHES AND TWO PLACE DECIMALS.

MANNED SPACECRAFT CENTER HOUSTON, TEXAS | SIZE A | 1900990
SCALE-NONE | REV LTR E | SHEET 12 OF 13

MIL 2088 - 4-63 WIR

INCHES
PHOTOGRAPHIC SCALE ONLY

0660061

REVISIONS					
SYM	ZONE	DESCRIPTION	CHG NO.	DATE	APPD.
M		SEE SHEET 1 FOR REVISION RECORD			

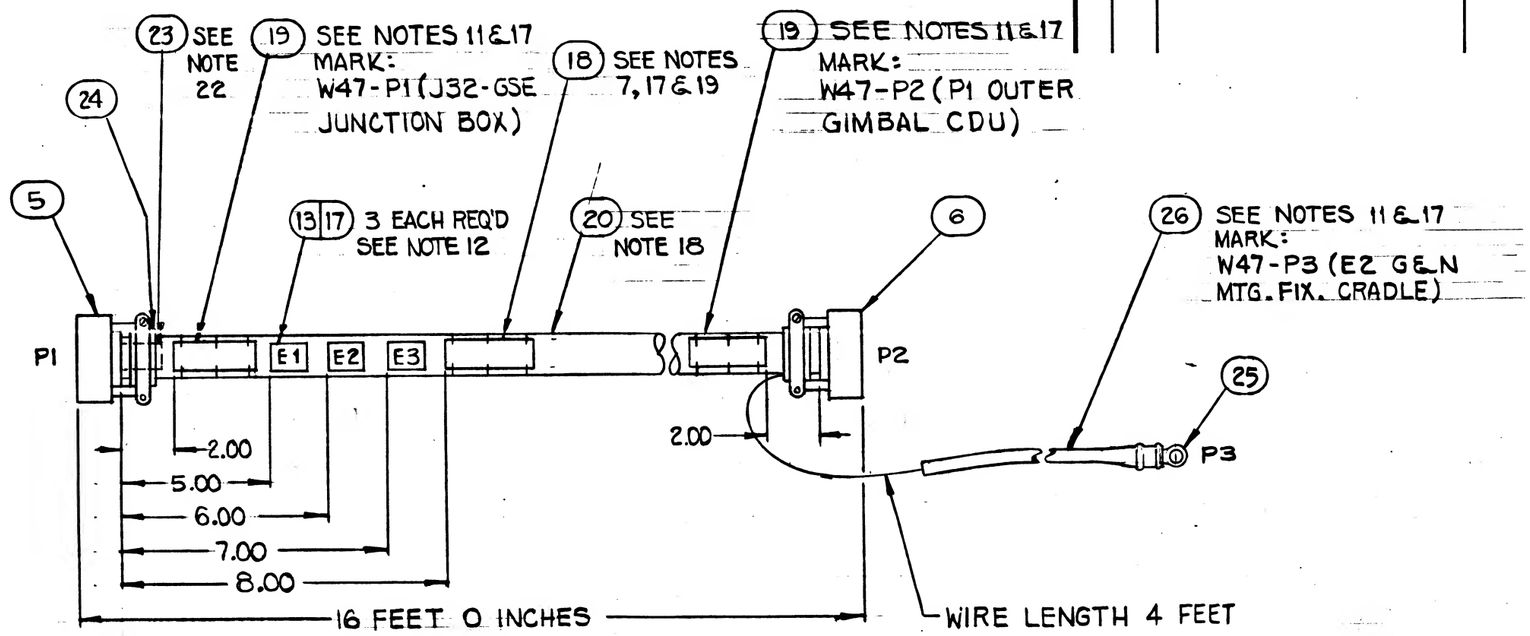

LOCATION TOLERANCE (EXCEPT LENGTH): ±.50

NEXT ASSY	USED ON
APPLICATION	

UNLESS OTHERWISE SPECIFIED
DIMENSIONS ARE IN INCHES
TOLERANCES ON
FRACTIONS ± DECIMALS ± ANGLES ±
DO NOT SCALE THIS DRAWING
MATERIAL
CONTRACT

AC SPARK PLUG DIVISION, GMC
MILWAUKEE, WISCONSIN
ACSP PN
DRAWN T. KOSMOTKA DATE 14 NOV 63
CHECKED MALIKOWSKI 20 NOV 63
APPROVAL N. ABRAHAM 20 NOV 63
APPROVAL 9/14/64
NASA APPROVAL 9/15/64
MIT APPROVAL 9/15/64

MANNED SPACECRAFT CENTER
HOUSTON, TEXAS

CABLE INTERCONNECT
W47 ISS, OSS, TESTING

1900990

CODE IDENT NO. | SIZE C | 1900990
SCALE NONE | SHEET 13 OF 13

MIL 1077C-P

INCHES 0 1 2
PHOTOGRAPHIC SCALE ONLY

GENERAL NOTES

NOTES

1 SEE CONDUCTOR CHART

2 SEE CONDUCTOR CHART

3 INTERPRET DRAWING IN ACCORDANCE WITH STANDARDS PRESCRIBED BY MIL-D-70327.

4 MARK CONDUCTOR IDENTIFICATION ON SINGLE CONDUCTORS PER ND1002019 OMITTING ALL SUFFIX LETTERS EXCEPT A AND B.

5 SPACING OF CONDUCTOR IDENTIFICATION SHALL BE EVERY 15 INCHES MAX AND AT EACH TERMINATION.

6 SPIRALLING OF THE MARKING IS ALLOWED.

7 IDENTIFY USING DRAWING NO. AND REVISION LETTER PER MIL-STD-130 (ES-267). .12 INCH HIGH CHARACTERS BLACK.

8 Y OR N IN TINNED COLUMN INDICATES YES OR NO.

9 A LETTER WITH AN ASTERISK SUFFIX, INDICATES A LOWER CASE LETTER.

10 VENDOR ITEM - SEE SPECIFICATION CONTROL DRAWING.

11 MARK IDENTIFICATION BAND WITH REFERENCE DESIGNATION AS NOTED .12 INCH HIGH COLOR BLACK, HOT IMPRESSION STAMPING PER ND1002019. CENTRALIZE.

MANNED SPACECRAFT CENTER HOUSTON, TEXAS	SIZE A	1900990	
SCALE - NONE	REV LTR +		SHEET 2 OF 13

MIL 2084 4-63

GENERAL NOTES

NOTES

12 MARK SLEEVING WITH REFERENCE DESIGNATIONS AS SHOWN .12 INCH HIGH, COLOR BLACK PER ND1002019.

13 MARK SLEEVING OF MULTI-CONDUCTORS WITH THE CONDUCTOR NUMBER .12 INCH HIGH, COLOR BLACK, PER ND1002019 WHEN SLEEVING ITEM NUMBERS FOLLOW AN A OR T IN THE ACCESSORIES ITEM NUMBER FIELD.

14 A OR T PREFIX IN THE ACCESSORIES ITEM NUMBER COLUMN INDICATES THE READING POSITION AWAY FROM TERMINATION OR TOWARD TERMINATION RESPECTIVELY, OF THE WIRE MARKER SLEEVE.

15 THE SUFFIX LETTER OF A CONDUCTOR IDENTIFICATION NUMBER INDICATES CONDUCTOR SHIELDING, COLOR, OR MARKING.

- A - FROM END SHIELD
- L - WHITE WITH BLUE TRACER
- R - WHITE WITH RED TRACER
- Y - WHITE WITH YELLOW TRACER
- W - WHITE

16 ASSEMBLE CONTACTS IN ALL CONNECTOR GROMMET HOLES

17 SECURE TO CABLE USING ITEM 21, MARKING TO READ AWAY FROM CONNECTOR.

18 SEAL ZIPPER TUBING PER ND 1002153

19 SERIALIZE PER ND 1002023

20 ITEM 16 FURNISHED WITH ITEM 6

21 ITEM 22 FURNISHED WITH ITEM 5

MANNED SPACECRAFT CENTER HOUSTON, TEXAS	SIZE A	1900990	
SCALE - NONE	REV LTR +		SHEET 3 OF 13

MIL 2084 4-63

FOR INFORMATION ONLY

CLASS B RELEASE TDR No. 05663 DATE 1/7/64

APPLICATION		REVISIONS		
NEXT ASSY	USED ON	SYM	DESCRIPTION	DATE	APPROVAL
1900005-011	1900005-011				

REV	+	+	+	+	+	+	+	+	+	+	+	+
SHEET	1	2	3	4	5	6	7	8	9	10	11	12/13
REV STATUS	+	+	+	+	+	+	+	+	+	+	+	+
OF SHEETS												

AC SPARK PLUG DIVISION, GMC
MILWAUKEE, WISCONSIN

ACSP PN

DRAWN 13 NOV DATE 23
CHECKED 26 NOV 63
APPROVAL 20 NOV 63
APPROVAL 1/3/64

NASA APPROVAL
MIT APPROVAL
CONTRACT NAS 9-497

MANNED SPACECRAFT CENTER HOUSTON, TEXAS

CABLE INTERCONNECT W47
ISS, OSS TESTING

CODE IDENT NO.	SIZE	1900990	REV +
SCALE NONE			SHEET 1 OF 13

GENERAL NOTES

TOLERANCE CHART, UNLESS OTHERWISE SPECIFIED ---

APPLICABLE LENGTH FOR WIRE OR CABLE, STRIP WIRE, STRIP JACKET, CUT WIRE OR CUT SHIELD	TOLERANCE				
	WIRE OR CABLE	STRIP WIRE	STRIP JACKET	CUT WIRE	CUT SHIELD
UNDER 1 INCH	+ .06-.00	+.03-.00	+.06-.06	+.06-.06	+.06-.06
1 INCH TO 6 INCHES	+ .50-.00	+.06-.00	+.25-.25	+.25-.25	+.25-.25
6 INCHES TO 6 FEET	+1.00-.00		+.50-.50	+.50-.50	+.50-.50
OVER 6 FEET	+2.00-.00				

MANNED SPACECRAFT CENTER HOUSTON, TEXAS	SIZE A	1900990	
SCALE - NONE	REV LTR +		SHEET 4 OF 13

MIL 2084 4-63

INCHES 0 1 2
PHOTOGRAPHIC SCALE ONLY

LIST OF MATERIAL

SEE NOTE	ITEM	REQ'D	PART NUMBER	DESCRIPTION
20	16	108	1010464-2	CONNECTOR CONTACT, SOCKET
10	17	3	1016006-002	SPLICE REDUCER
10	18	1	1016128-011	BAND IDENTIFICATION
10	19	2	1016128-041	BAND IDENTIFICATION
	20	1	1900990-005	ZIPPER TUBING, ND 1002155, TYPE 1, PLASTIC, FLEXIBLE 5/8 DIA 16 FT. TOTAL LENGTH.
	21	AR	MIL-T-713	LACING TAPE, TYPE P, CLASS 2, BLACK (ES 2732 NO. 18)
21	22	61		CONNECTOR CONTACT, PIN

MANNED SPACECRAFT CENTER HOUSTON, TEXAS | SIZE A | 1900990
SCALE-NONE | REV LTR + | SHEET 6 OF 13

MIL 2084 4-63

GJD CABLE W47 + 1900990

CONDUCTOR INDIVIDUAL LENGTH NUMBER	ITEM NO. [2]	FROM CUT WIRE OR SHIELD STRIP WIRE OR JACKET CIRCUIT POINT	[2]	TIN [2]	TERMINATION SPEC. [1] ITEM NO.	NO.	TO CUT WIRE OR SHIELD STRIP WIRE OR JACKET CIRCUIT POINT	[2]	TIN [2]	TERMINATION SPEC [1] ITEM NO.	NO.
A 1	4	P1-Z	22N				P2- 30	22N			
A 2	2		230	200	11 12	5		230	200	A 15	7A
					A 14						
A 2A	4	SHLD A2	37N				E1	37N			
A 2W		P1-B*	22N		22		P2- 12	22N		16	
A 3	1		230	200	8 7	5		230	200	A 14	7A
					A 14						
A 3A	4	SHLD A3	37N				E1	37N			
A 3L		P1-D*	22N		22		P2- 14	22N		16	
A 3R		P1-C*	22N		22		P2- 1	22N		16	
A 4	4	P1-DD	22N		22		P2- 15	22N		16	
A 5	1		230	200	8 7	5		230	200	A 14	7A
					A 14						
A 5A	4	SHLD A5	37N				E1	37N			
A 5L		P1-F*	22N		22		P2- 57	22N		16	
A 5R		P1-E*	22N		22		P2- 67	22N		16	
A 6	1		230	200	8 7	5		230	200	A 14	7A
					A 14						

[1] THE STD CONDUCTOR TERMINATION FIGURES ARE PER
[2] DIMENSIONS ARE IN INCHES AND TWO PLACE DECIMALS.

MANNED SPACECRAFT CENTER HOUSTON, TEXAS | SIZE A | 1900990
SCALE-NONE | REV LTR + | SHEET 7 OF 13

MIL 2085 - 4-63 WIR

LIST OF MATERIAL

SEE NOTE	ITEM	REQ'D	PART NUMBER	DESCRIPTION
	1	1	1900990-001	WIRE ND 1002181 TYPE 2, CLASS 4, WHT JAKT, 22 AWG WHT/BLU, WHT/RED, 176 FT TOTAL LENGTH.
	2	1	1900990-002	WIRE ND 1002181 TYPE 1, CLASS 4, WHT JAKT, 22 AWG WHITE 80 FT. TOTAL LENGTH.
	3	1	1900990-003	WIRE ND 1002181 TYPE 3, CLASS 4, WHT JAKT, 22 AWG WHT/BLU, WHT/RED, WHT/YEL, 48 FT TOTAL LENGTH.
	4	1	1900990-004	WIRE ND 1002181 TYPE 1, CLASS 1, 22 AWG WHT, 75 FT, TOTAL LENGTH.
16	5	1	MS3126F-24-61PX	(1897047-612) CONNECTOR PLUG
16	6	1	1010411-2	CONNECTOR
10	7	11	1000243-8	FERRULE ELECT. COND.
10	8	11	1000242-7	FERRULE ELECT. COND.
10	9	3	1000243-11	FERRULE ELECT. COND.
10	10	3	1000242-11	FERRULE ELECT. COND.
10	11	5	1000243-3	FERRULE ELECT. COND.
10	12	5	1000242-2	FERRULE ELECT. COND.
10	13	3	1010490-258	INSULATION SLEEVING ELECT.
10	14	33	1010490-198	INSULATION SLEEVING ELECT.
10	15	5	1010490-200	INSULATION SLEEVING ELECT.

MANNED SPACECRAFT CENTER HOUSTON, TEXAS | SIZE A | 1900990
SCALE-NONE | REV LTR + | SHEET 5 OF 13

MIL 2084 4-63

GJD CABLE W47 + 1900990

CONDUCTOR INDIVIDUAL LENGTH NUMBER	ITEM NO. [2]	FROM CUT WIRE OR SHIELD STRIP WIRE OR JACKET CIRCUIT POINT	[2]	TIN [2]	TERMINATION SPEC. [1] ITEM NO.	NO.	TO CUT WIRE OR SHIELD STRIP WIRE OR JACKET CIRCUIT POINT	[2]	TIN [2]	TERMINATION SPEC [1] ITEM NO.	NO.
A 6A	4	SHLD A6	37N				E1	37N			
A 6L		P1-H*	22N		22		P2- 45	22N		16	
A 6R		P1-G*	22N		22		P2- 35	22N		16	
A 7	2		280	250	11 12	5		280	250	A 15	7A
					A 14						
A 7A	4	SHLD A7	37N				E1	37N			
A 7W		P1-I*	22N		22		P2- 34	22N		16	
A 8	1		280	250	8 7	5		280	250	A 14	7A
					A 14						
A 8A	4	SHLD A8	37N				E1	37			
A 8L		P1-K*	22N		22		P2- 6	22N		16	
A 8R		P1-J*	22N		22		P2- 20	22N		16	
A 9	1		280	250	8 7	5		280	250	A 14	7A
					A 14						
A 9A	4	SHLD A18	37N				E2	37N			
A 9L		P1-N*	22N		22		P2- 7	22N		16	
A 9R		P1-M*	22N		22		P2- 21	22N		16	
A 10	1		280	250	8 7	5		280	250	A 14	7A

[1] THE STD CONDUCTOR TERMINATION FIGURES ARE PER
[2] DIMENSIONS ARE IN INCHES AND TWO PLACE DECIMALS.

MANNED SPACECRAFT CENTER HOUSTON, TEXAS | SIZE A | 1900990
SCALE-NONE | REV LTR + | SHEET 8 OF 13

MIL 2085 - 4-63 WIR

INCHES 0 1 2 PHOTOGRAPHIC SCALE ONLY

GJD CABLE W47 + 1900990

CONDUCTOR NUMBER	INDIVIDUAL LENGTH ITEM NO.	[2]	FROM CUT WIRE OR SHIELD STRIP WIRE OR JACKET CIRCUIT POINT	[2]	TIN	[2]	TERMINATION SPEC. [1] ITEM NO.			NO.	TO CUT WIRE OR SHIELD STRIP WIRE OR JACKET CIRCUIT POINT	[2]	TIN	[2]	TERMINATION SPEC [1] ITEM NO.			NO.
A 13R			P1-V*	22	N		22				P2-107	22	N		16			
A 13Y			P1-X*	22	N		22				P2- 94	22	N		16			
A 14	1			330		300	8	7	5			330		300	A 14		7A	
							A 14											
A 14A	4		SHLD A14	37	N						E2	37	N					
A 14L			P1-Z*	22	N		22				P2- 50	22	N		16			
A 14R			P1-Y*	22	N		22				P2- 60	22	N		16			
A 15	1			380		350	8	7	5			380		350	A 14		7A	
							A 14											
A 15A	4		SHLD A15	37	N						E3	37	N					
A 15L			P1-CC	22	N		22				P2- 2	22	N		16			
A 15R			P1-BB	22	N		22				P2- 3	22	N		16			
A 16	4		P1-AA	22	N		22				P2- 16	22	N		16			
A 17	3			380		350	9	10	5			380		350	A 14		7A	
							A 14											
A 17A	4		SHLD A17	37	N						E3	37	N					
A 17L			P1-FF	22	N		22				P2-105	22	N		16			
A 17R			P1-EE	22	N		22				P2- 92	22	N		16			

[1] THE STD CONDUCTOR TERMINATION FIGURES ARE PER
[2] DIMENSIONS ARE IN INCHES AND TWO PLACE DECIMALS.

MANNED SPACECRAFT CENTER HOUSTON, TEXAS | SIZE A | 1900990
SCALE - NONE | REV LTR + | SHEET 10 OF 13

MIL 2085 - 4-63 WIR

GJD CABLE W47 + 1900990

CONDUCTOR NUMBER	INDIVIDUAL LENGTH ITEM NO.	[2]	FROM CUT WIRE OR SHIELD STRIP WIRE OR JACKET CIRCUIT POINT	[2]	TIN	[2]	TERMINATION SPEC. [1] ITEM NO.			NO.	TO CUT WIRE OR SHIELD STRIP WIRE OR JACKET CIRCUIT POINT	[2]	TIN	[2]	TERMINATION SPEC [1] ITEM NO.			NO.
A 17Y			P1-GG	22	N		22				P2-106	22	N		16			
A 18	3			380		350	9	10	5			380		350	A 14		7A	
							A 14											
A 18A	4		SHLD A18	37	N						E3	37	N					
A 18L			P1-JJ	22	N		2				P2- 31	22	N		16			
A 18R			P1-HH	22	N		22				P2- 32	22	N		16			
A 18Y			P1-KK	22	N		22				P2- 43	22	N		16			
A 19	1			380		350	8	7	5			380		350	A 14		7A	
							A 14											
A 19A	4		SHLD A19	37	N						E3	37	N					
A 19L			P1-MM	22	N		22				P2- 29	22	N		16			
A 19R			P1-LL	22	N		22				P2- 28	22	N		16			
A 20	4		P1-A	22	N		22				P2- 41	22	N		16			
A 21	2			430		400	11	12	5			430		400	A 15		7A	
							A 14											
A 21A	4		SHLD A21	37	N						E3	37	N					
A 21W			P1-NN	22	N		22				P2- 11	22	N		16			
A 22	2			430		400	11	12	5			430		400	A 15		7A	

[1] THE STD CONDUCTOR TERMINATION FIGURES ARE PER
[2] DIMENSIONS ARE IN INCHES AND TWO PLACE DECIMALS.

MANNED SPACECRAFT CENTER HOUSTON, TEXAS | SIZE A | 1900990
SCALE - NONE | REV LTR + | SHEET 11 OF 13

MIL 2085 - 4-63 WIR

GJD CABLE W47 + 1900990

CONDUCTOR NUMBER	INDIVIDUAL LENGTH ITEM NO.	[2]	FROM CUT WIRE OR SHIELD STRIP WIRE OR JACKET CIRCUIT POINT	[2]	TIN	[2]	TERMINATION SPEC. [1] ITEM NO.			NO.	TO CUT WIRE OR SHIELD STRIP WIRE OR JACKET CIRCUIT POINT	[2]	TIN	[2]	TERMINATION SPEC [1] ITEM NO.			NO.
							A 14											
A 10A	4		SHLD A10	37	N						E2	37	N					
A 10L			P1-Q*	22	N		22				P2- 90	22	N		16			
A 10R			P1-P*	22	N		22				P2-104	22	N		16			
A 11	1			330		300	8	7	5			330		300	A 14		7A	
							A 14											
A 11A	4		SHLD A11	37	N						E2	37	N					
A 11L			P1-S*	22	N		22				P2- 86	22	N		16			
A 11R			P1-R*	22	N		22				P2-100	22	N		16			
A 12	1			330		300	8	7	5			330		300	A 14		7A	
							A 14											
A 12A	4		SHLD A12	37	N						E2	37	N					
A 12L			P1-U*	22	N		22				P2- 87	22	N		16			
A 12R			P1-T*	22	N		22				P2-101	22	N		16			
A 13	3			330		300	9	10	5			330		300	A 14		7A	
							A 14											
A 13A	4		SHLD A13	37	N						E2	37	N					
A 13L			P1-W*	22	N		22				P2-108	22	N		16			

[1] THE STD CONDUCTOR TERMINATION FIGURES ARE PER
[2] DIMENSIONS ARE IN INCHES AND TWO PLACE DECIMALS.

MANNED SPACECRAFT CENTER HOUSTON, TEXAS | SIZE A | 1900990
SCALE - NONE | REV LTR + | SHEET 9 OF 13

MIL 2085 - 4-63 WIR

GJD CABLE W47 + 1900990

CONDUCTOR NUMBER	INDIVIDUAL LENGTH ITEM NO.	[2]	FROM CUT WIRE OR SHIELD STRIP WIRE OR JACKET CIRCUIT POINT	[2]	TIN	[2]	TERMINATION SPEC. [1] ITEM NO.			NO.	TO CUT WIRE OR SHIELD STRIP WIRE OR JACKET CIRCUIT POINT	[2]	TIN	[2]	TERMINATION SPEC [1] ITEM NO.			NO.
							A 14											
A 22A	4		SHLD A22	37	N						E3	37	N					
A 22W			P1-PP	22	N		22				P2- 25	22	N		16			
A 23	4		P1-B	22	N		22				E1	37	N					
A 24	4		E1	37	N						E2	37	N					
A 25	4		E2	37	N						E3	37	N					
A 26	2			430		400	11	12	5			430		400	A 15		7A	
							A 14											
A 26A	4		SHLD A26	37							E3	37	N					
A 26W			P1-A*	22			22				P2- 89	22	N		16			

[1] THE STD CONDUCTOR TERMINATION FIGURES ARE PER
[2] DIMENSIONS ARE IN INCHES AND TWO PLACE DECIMALS.

MANNED SPACECRAFT CENTER HOUSTON, TEXAS | SIZE A | 1900990
SCALE - NONE | REV LTR + | SHEET 12 OF 13

MIL 2085 - 4-63 WIR

INCHES 0 1 2
PHOTOGRAPHIC SCALE ONLY

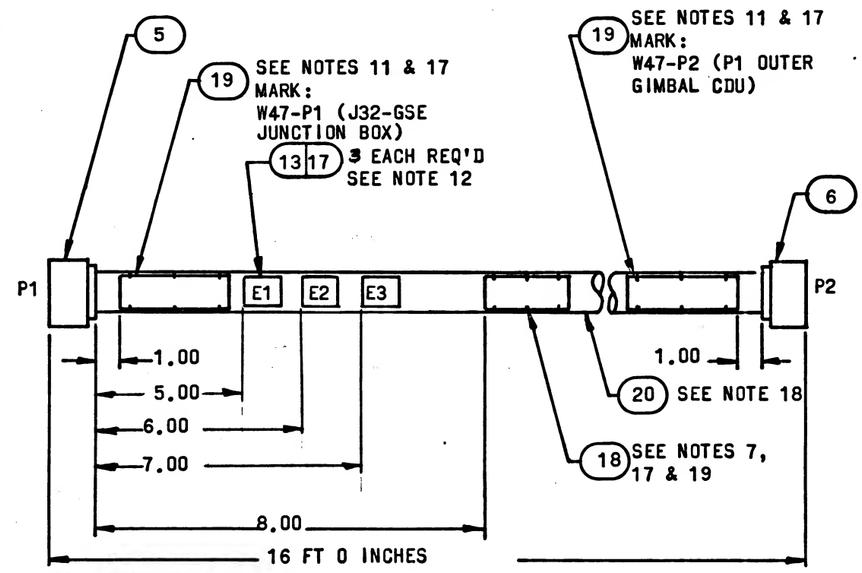

LOCATION TOLERANCE
(EXCEPT LENGTH):
+.50
-.50

MANNED SPACECRAFT CENTER HOUSTON, TEXAS	SIZE A	1900990
SCALE-NONE	REV LTR +	SHEET 13 OF 13

MIL 2084 4-63

PHOTOGRAPHIC SCALE ONLY
0 1 2 INCHES

GENERAL NOTES

NOTES

1 SEE CONDUCTOR CHART

2 SEE CONDUCTOR CHART

3 INTERPRET DRAWING IN ACCORDANCE WITH STANDARDS PRESCRIBED BY MIL-D-70327.

4 MARK CONDUCTOR IDENTIFICATION ON SINGLE CONDUCTORS PER ND1002019 OMITTING ALL SUFFIX LETTERS EXCEPT A AND B.

5 SPACING OF CONDUCTOR IDENTIFICATION SHALL BE EVERY 15 INCHES MAX AND AT EACH TERMINATION.

6 SPIRALLING OF THE MARKING IS ALLOWED.

7 IDENTIFY USING DRAWING NO. AND REVISION LETTER PER MIL-STD-130 (ES-267). .12 INCH HIGH CHARACTERS BLACK.

8 Y OR N IN TINNED COLUMN INDICATES YES OR NO.

9 A LETTER WITH AN ASTERISK SUFFIX, INDICATES A LOWER CASE LETTER.

10 VENDOR ITEM - SEE SPECIFICATION CONTROL DRAWING.

11 MARK IDENTIFICATION BAND WITH REFERENCE DESIGNATION AS NOTED .12 INCH HIGH COLOR BLACK, HOT IMPRESSION STAMPING PER ND1002019. CENTRALIZE.

MANNED SPACECRAFT CENTER HOUSTON, TEXAS	SIZE A	1900991	
SCALE - NONE	REV LTR +		SHEET 2 OF 10

MIL 2084 4-63

GENERAL NOTES

NOTES

12 MARK SLEEVING WITH REFERENCE DESIGNATIONS AS SHOWN .12 INCH HIGH, COLOR BLACK PER ND1002019.

13 MARK SLEEVING OF MULTI-CONDUCTORS WITH THE CONDUCTOR NUMBER .12 INCH HIGH, COLOR BLACK, PER ND1002019 WHEN SLEEVING ITEM NUMBERS FOLLOW AN A OR T IN THE ACCESSORIES ITEM NUMBER FIELD.

14 A OR T PREFIX IN THE ACCESSORIES ITEM NUMBER COLUMN INDICATES THE READING POSITION AWAY FROM TERMINATION OR TOWARD TERMINATION RESPECTIVELY, OF THE WIRE MARKER SLEEVE.

15 THE SUFFIX LETTER OF A CONDUCTOR IDENTIFICATION NUMBER INDICATES CONDUCTOR SHIELDING, COLOR, OR MARKING.

A - FROM END SHIELD
L - WHITE WITH BLUE TRACER OR LETTER L
R - WHITE WITH RED TRACER OR LETTER R
Y - WHITE WITH YELLOW TRACER OR LETTY Y

16 ASSEMBLE CONTACTS IN ALL CONNECTOR GROMMET HOLES

17 THE FOLLOWING CONDUCTORS ARE TO BE TWISTED TOGETHER WITH THE BEST COMMERCIAL PRACTICE. THEY SHALL BE TWISTED WITH A LAY NOT GREATER THAN 14 TIMES NOR LESS THAN 8 TIMES THE PITCH DIAMETER.

18 SECURE TO CABLE USING ITEM 15, MARKING TO READ AWAY FROM CONNECTOR.

19 SEAL ZIPPER TUBING PER ND 1002153.

20 SERIALIZE PER ND 1002023

MANNED SPACECRAFT CENTER HOUSTON, TEXAS	SIZE A	1900991	
SCALE - NONE	REV LTR +		SHEET 3 OF 10

MIL 2084 4-63

APPLICATION		REVISIONS			
NEXT ASSY	USED ON	SYM	DESCRIPTION	DATE	APPROVAL
1900005-011	1900005-011				

FOR INFORMATION ONLY

CLASS B RELEASE TDR No. 05662 DATE 1/9/64

REV	+	+	+	+	+	+	+	+	+	+
SHEET	1	2	3	4	5	6	7	8	9	10

REV STATUS + + + + + + + + + +

OF SHEETS

AC SPARK PLUG DIVISION, GMC
MILWAUKEE, WISCONSIN

ACSP PN

MANNED SPACECRAFT CENTER
HOUSTON, TEXAS

CABLE INTERCONNECT W61
ISS TESTING

DRAWN DATE 11 NOV 63
CHECKED DATE 20 NOV 63
APPROVAL DATE 20 NOV 63
APPROVAL DATE 1/3/64
NASA APPROVAL
MIT APPROVAL

CODE IDENT NO. | SIZE A | 1900991 | REV +

SCALE | SHEET 1 OF 10

CONTRACT NAS 9-497

GENERAL NOTES

21 THIS ITEM FURNISHED WITH ITEM 6.

22 THIS ITEM FURNISHED WITH ITEM 7.

TOLERANCE CHART, UNLESS OTHERWISE SPECIFIED ---

APPLICABLE LENGTH FOR WIRE OR CABLE, STRIP WIRE, STRIP JACKET, CUT WIRE OR CUT SHIELD	TOLERANCE				
	WIRE OR CABLE	STRIP WIRE	STRIP JACKET	CUT WIRE	CUT SHIELD
UNDER 1 INCH	+ .06-.00	+.03-.00	+.06-.06	+.06-.06	+.06-.06
1 INCH TO 6 INCHES	+ .50-.00	+.06-.00	+.25-.25	+.25-.25	+.25-.25
6 INCHES TO 6 FEET	+1.00-.00		+.50-.50	+.50-.50	+.50-.50
OVER 6 FEET	+2.00-.00				

MANNED SPACECRAFT CENTER HOUSTON, TEXAS	SIZE A	1900991	
SCALE - NONE	REV LTR +		SHEET 4 OF 10

MIL 2084 4-63

INCHES 0 1 2
PHOTOGRAPHIC SCALE ONLY

LIST OF MATERIAL

SEE NOTE	ITEM	REQ'D	PART NUMBER	DESCRIPTION
10	16	14	1010490-200	INSULATION SLEEVING ELECT
	17	1	1900991-006	ZIPPER TUBING, ND 1002155, TYPE 1, PLASTIC, FLEXIBLE, 1/2 DIA 1 FEET 3 INCHES TOTAL LENGTH
21	18			CONNECTOR CONTACTS, PIN
22	19			CONNECTOR CONTACTS SOCKET

MANNED SPACECRAFT CENTER HOUSTON, TEXAS | SIZE A | 1900991
SCALE - NONE | REV LTR + | SHEET 6 OF 10

MIL 2084 4-63

6

GIT CABLE W-61 + 1900991

CONDUCTOR NUMBER	INDIVIDUAL LENGTH ITEM NO. [3]	FROM CUT WIRE OR SHIELD STRIP WIRE OR JACKET CIRCUIT POINT [2]	TIN [2]	TERMINATION SPEC. [1] ITEM NO.	NO.	TO CUT WIRE OR SHIELD STRIP WIRE OR JACKET CIRCUIT POINT [2]	TIN [2]	TERMINATION SPEC [1] ITEM NO.	NO.
A 1	1			A 16				A 16	
A 1L		P1-B	25N	18		P2-B	25N	19	
A 1R		P1-A	25N	18		P2-A	25N	19	
A 1Y		P1-C	25N	18		P2-C	25N	19	
A 2	3	P1-D	25N	18		P2-D	25N	19	
A 3	3	P1-E	25N	18		P2-E	25N	19	
A 4	3	P1-F	25N	18		P2-F	25N	19	
A 5	3	P1-G	25N	18		P2-G	25N	19	
A 6	2			A 16				A 16	
A 6L		P1-J	25N	18		P2-J	25N	19	
A 6R		P1-H	25N	18		P2-H	25N	19	
A 7	3	P1-K	25N	18		P2-K	25N	19	
A 8	2			A 16				A 16	
A 8L		P1-L	25N	18		P2-L	25N	19	
A 8R		P1-M	25N	18		P2-M	25N	19	
A 9	3	P1-N	25N	18		P2-N	25N	19	
A 10	3	P1-P	25N	18		P2-P	25N	19	
A 11	3	P1-Y	25N	18		P2-Y	25N	19	

[1] THE STD CONDUCTOR TERMINATION FIGURES ARE PER
[2] DIMENSIONS ARE IN INCHES AND TWO PLACE DECIMALS.

MANNED SPACECRAFT CENTER HOUSTON, TEXAS | SIZE A | 1900991
SCALE - NONE | REV LTR + | SHEET 7 OF 10

MIL 2085 - 4-63 WIR

LIST OF MATERIAL

SEE NOTE	ITEM	REQ'D	PART NUMBER	DESCRIPTION
	1	1	1900991-001	WIRE ND 1002181, TYPE 3, CLASS 1 T3, 20 AWG, WHITE WITH LETTER L, WHITE WITH LETTER R, WHITE WITH LETTER Y, 15 INCHES TOTAL LENGTH.
	2	1	1900991-002	WIRE ND 1002181, TYPE 2, CLASS 1, T2, 20 AWG, WHITE WITH LETTER L, WHITE WITH LETTER R 75 INCHES TOTAL LENGTH.
	3	1	1900991-003	WIRE ND 1002181, TYPE 1, CLASS 1, 20 AWG WHITE 65 INCHES TOTAL LENGTH.
	4	1	1900991-004	WIRE ND 1002181, TYPE 1, CLASS 1, 22 AWG WHITE 10 INCHES TOTAL LENGTH
	5	1	1900991-005	WIRE ND 1002181, TYPE 2, CLASS 4, WHT JAKT, 20 AWG, WHT/BLU, WHT/RED 30 IN TOTAL LENGTH
16	6	1	MS3126F18-32PX	(1897125-322) CONNECTOR-PLUG
16	7	1	MS3126F18-32SX	(1897092-322) CONNECTOR-PLUG
10	8	4	1000243-11	FERRULE-ELECT COND.
10	9	2	1000242-9	FERRULE-ELECT COND.
10	10	14	1010490-198	INSULATION-SLEEVING ELECT
10	11	1	1016006-002	SPLICE REDUCER
10	12	11	1010490-258	INSULATION - SLEEVING ELECT
10	13	2	1016128-011	IDENTIFICATION BAND
10	14	1	1016128-041	IDENTIFICATION BAND
	15	AR	MIL-T-713	LACING TAPE, TYPE P, CLASS 2, BLACK (ES 2732 No.18)

MANNED SPACECRAFT CENTER HOUSTON, TEXAS | SIZE A | 1900991
SCALE - NONE | REV LTR + | SHEET 5 OF 10

MIL 2084 4-63

5

GIT CABLE W-61 + 1900991

CONDUCTOR NUMBER	INDIVIDUAL LENGTH ITEM NO. [3]	FROM CUT WIRE OR SHIELD STRIP WIRE OR JACKET CIRCUIT POINT [2]	TIN [2]	TERMINATION SPEC. [1] ITEM NO.	NO.	TO CUT WIRE OR SHIELD STRIP WIRE OR JACKET CIRCUIT POINT [2]	TIN [2]	TERMINATION SPEC [1] ITEM NO.	NO.
A 12	5	250	220	8 9	5	250	220	8 A 10 7A	
				A 10					
A 12A	4	SHLD A12	25N			E1	37N		
A 12L		P1-W	25N	18		P2-W	25N	19	
A 12R		P1-V	25N	18		P2-V	25N	19	
A 13	5	250	220	8 9	5	250	220	8 A 10 7A	
				A 10					
A 13A	4	SHLD A13	25N			E1	37N		
A 13L		P1-R	25N	18		P2-R	25N	19	
A 13R		P1-X	25N	18		P2-X	25N	19	
A 14	3	P1-Z	25N	18		P2-Z	25N	19	
A 15	3	P1-A*	25N	18		P2-A*	25N	19	
A 16	2			A 16				A 16	
A 16L		P1-C*	25N	18		P2-C*	25N	19	
A 16R		P1-B*	25N	18		P2-B*	25N	19	
A 17	2			A 16				A 16	
A 17L		P1-E*	25N	18		P2-E*	25N	19	
A 17R		P1-D*	25N	18		P2-D*	25N	19	

[1] THE STD CONDUCTOR TERMINATION FIGURES ARE PER
[2] DIMENSIONS ARE IN INCHES AND TWO PLACE DECIMALS.

MANNED SPACECRAFT CENTER HOUSTON, TEXAS | SIZE A | 1900991
SCALE - NONE | REV LTR + | SHEET 8 OF 10

MIL 2085 - 4-63 WIR

INCHES 0 1 2
PHOTOGRAPHIC SCALE ONLY

GIT CABLE W-61 + 1900991

CONDUCTOR INDIVIDUAL LENGTH NUMBER	ITEM NO. (2)	FROM CUT WIRE OR SHIELD STRIP WIRE OR JACKET CIRCUIT POINT	(2)	TIN (2)	TERMINATION SPEC. (1) ITEM NO.	NO.	TO CUT WIRE OR SHIELD STRIP WIRE OR JACKET CIRCUIT POINT	(2)	TIN (2)	TERMINATION SPEC (1) ITEM NO.	NO.
A 18	2				A 16					A 16	
A 18L		P1-G*	25	N	18		P2-G*	25	N	19	
A 18R		P1-F*	25	N	18		P2-F*	25	N	19	
A 19	3	P1-J*	25	N	18		E1	37	N		
A 20	2				A 16					A 16	
A 20L		P1-T	25	N	18		P2-T	25	N	19	
A 20R		P1-S	25	N	18		P2-S	25	N	19	
A 21	3	P1-U	25	N	18		P2-U	25	N	19	
A 22	3	P1-H*	25	N	18		P2-H*	25	N	19	

(1) THE STD CONDUCTOR TERMINATION FIGURES ARE PER
(2) DIMENSIONS ARE IN INCHES AND TWO PLACE DECIMALS.

MANNED SPACECRAFT CENTER HOUSTON, TEXAS | SIZE A | 1900991
SCALE - NONE | REV LTR + | SHEET 9 OF 10

MIL 2085 - 4-63 WIR

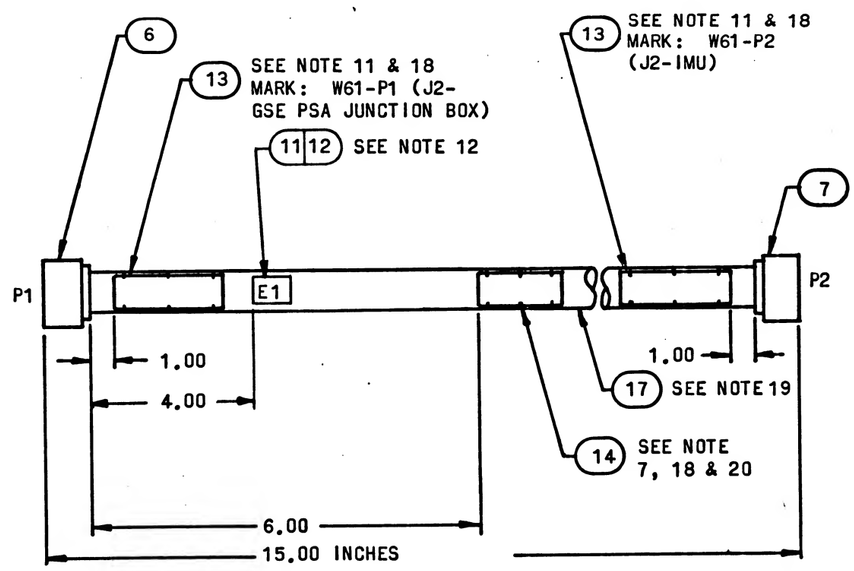

LOCATION TOLERANCE (EXCEPT LENGTH):
+.50
-.50

MANNED SPACECRAFT CENTER HOUSTON, TEXAS | SIZE A | 1900991
SCALE - NONE | REV LTR + | SHEET 10 OF 10

MIL 2084 4-63

PHOTOGRAPHIC SCALE ONLY
0 1 2 INCHES

PENNANT NOTE — GENERAL NOTES

1. SEE CONDUCTOR CHART, PENNANT NOTE 1.
2. SEE CONDUCTOR CHART, PENNANT NOTE 2.
3. INTERPRET DRAWING IN ACCORDANCE WITH STANDARDS PRESCRIBED BY MIL-D-70327.
4. MARK CONDUCTOR IDENTIFICATION ON SINGLE CONDUCTORS PER ND1002019 OMITTING ALL SUFFIX LETTERS EXCEPT A AND B.
5. SPACING OF CONDUCTOR IDENTIFICATION SHALL BE EVERY 15 INCHES MAX AND AT EACH TERMINATION
6. SPIRALLING OF THE MARKING IS ALLOWED.
7. IDENTIFY USING DRAWING NO. AND REVISION LETTER PER MIL-STD-130 (ES-267). .12 INCH HIGH CHARACTERS BLACK.
8. Y OR N IN TINNED COLUMN INDICATES YES OR NO.
9. A LETTER WITH AN ASTERISK SUFFIX, INDICATES A LOWER CASE LETTER.
10. VENDOR ITEM - SEE SPECIFICATION CONTROL DRAWING.
11. MARK IDENTIFICATION BAND WITH REFERENCE DESIGNATION AS NOTED .12 INCH HIGH COLOR BLACK, HOT IMPRESSION STAMPING PER ND1002019. CENTRALIZE.
12. MARK SLEEVING WITH REFERENCE DESIGNATIONS AS SHOWN .12 INCH HIGH, COLOR BLACK PER ND1002019.
13. MARK SLEEVING OF MULTI-CONDUCTORS WITH THE CONDUCTOR NUMBER .12 INCH HIGH, COLOR BLACK, PER ND1002019 WHEN SLEEVING ITEM NUMBERS FOLLOW AN A OR T IN THE ACCESSORIES ITEM NUMBER FIELD.

MANNED SPACECRAFT CENTER HOUSTON, TEXAS	SIZE A	1900992	
SCALE-NONE	REV LTR B		SHEET 2 OF 13

MIL 2064 4-63

PENNANT NOTE — GENERAL NOTES

14. A OR T PREFIX IN THE ACCESSORIES ITEM NUMBER COLUMN INDICATES THE READING POSITION AWAY FROM TERMINATION OR TOWARD TERMINATION RESPECTIVELY, OF THE WIRE MARKER SLEEVE.
15. THE SUFFIX LETTER OF A CONDUCTOR IDENTIFICATION NUMBER INDICATES CONDUCTOR SHIELDING, COLOR, OR MARKING.
    - A - FROM END SHIELD
    - L - WHITE WITH BLUE TRACER OR WHITE WITH LETTER L
    - R - WHITE WITH RED TRACER OR WHITE WITH LETTER R
    - Y - WHITE WITH YELLOW TRACER OR WHITE WITH LETTER Y
    - W - WHITE
16. ASSEMBLE CONTACTS IN ALL CONNECTOR GROMMET HOLES.
17. SECURE TO CABLE USING ITEM 19, MARKING TO READ AWAY FROM CONNECTOR
18. SEAL ZIPPER TUBING PER ND1002153.
19. SERIALIZE PER ND1002023
20. THIS ITEM FURNISHED WITH ITEM 7
21. THIS ITEM FURNISHED WITH ITEM 8
22. ITEM 23 SHALL BE SHORTENED WHEN NECESSARY TO AVOID INTERFERENCE WITH FERRULES AND MAY BE CUT LENGTHWISE ON ONE SIDE. SELECT ONE OR MORE OF ITEM 23 AS REQUIRED TO FIT.

MANNED SPACECRAFT CENTER HOUSTON, TEXAS	SIZE A	1900992	
SCALE-NONE	REV LTR B		SHEET 3 OF 13

MIL 2064 4-63

FOR INFORMATION ONLY

CLASS B RELEASE TDR No. 05663 DATE 1/7/69

REVISIONS

SYM	DESCRIPTION	DATE	APPROVAL
A	CHANGE IN ACCORDANCE WITH CM 193772 TDRR 08671	17 FEB 64	JJ
B	CHANGE IN ACCORDANCE WITH CM 195643 TDRR 08672	24 MAR 64	RHF

APPLICATION

NEXT ASSY	USED ON
1901908	1900005-011

REV/SHEET 8 8 8 8 8 8 8 8 8 8 8 8
REV STATUS/REV 1 2 3 4 5 6 7 8 9 10 11 12 13
OF SHEETS/SHEET

AC SPARK PLUG DIVISION, GMC
MILWAUKEE, WISCONSIN

ACSP PN

DRAWN Carl 11 OCT 63
WELD Carl 20 NOV 63
CHECKED
APPROVAL 20 NOV 63
APPROVAL 1/3/69

MANNED SPACECRAFT CENTER HOUSTON, TEXAS

CABLE INTERCONNECT W42
ISS TESTING

REV B
CODE IDENT NO. SIZE A 1900992
SCALE
SHEET 1 OF 13

NASA APPROVAL
MIT APPROVAL
CONTRACT NAS 9-497

PENNANT NOTE — GENERAL NOTES

TOLERANCE CHART, UNLESS OTHERWISE SPECIFIED ---

APPLICABLE LENGTH FOR WIRE OR CABLE, STRIP WIRE, STRIP JACKET, CUT WIRE OR CUT SHIELD.	TOLERANCE: WIRE OR CABLE	STRIP WIRE	STRIP JACKET	CUT WIRE	CUT SHIELD
UNDER 1 INCH	+.06-.00	+.03-.00	+.06-.06	+.06-.06	+.06-.06
1 INCH TO 6 INCHES	+.50-.00	+.06-.00	+.25-.25	+.25-.25	+.25-.25
6 INCHES TO 6 FEET	+1.00-.00		+.50-.50	+.50-.50	+.50-.50
OVER 6 FEET	+2.00-.00				

MANNED SPACECRAFT CENTER HOUSTON, TEXAS	SIZE A	1900992	
SCALE-NONE	REV LTR B		SHEET 4 OF 13

MIL 2064 4-63

PENNANT LIST OF MATERIALS

NOTE	ITEM	QTY	PART NO	DESCRIPTION
	1	1	1900992-001	WIRE ND1002181, TYPE 2, CLASS 4 WHT JAKT 20AWG WHT/BLU, WHT/RED 48 FT. - 0 INCH TOTAL LENGTH.
	2	1	1900992-002	WIRE ND1002181, TYPE 1, CLASS 4 WHT JAKT 20AWG WHITE 64 FT. - 0 INCH TOTAL LENGTH.
	3	1	1900992-003	WIRE ND1002181, TYPE 1, CLASS 1, WHT JAKT 20AWG WHITE 528 FT. - 0 INCH TOTAL LENGTH
	4	1	1900992-004	WIRE ND1002181, TYPE 2, CLASS 1 T2 20AWG WHT WITH LETTER L WHT WITH LETTER R 80 FT - 0 IN. TOTAL LENGTH
	5	1	1900992-005	WIRE ND1002181, TYPE 3, CLASS 1 T3 20AWG WHT WITH LETTER L WHT WITH LETTER R, WHT WITH LETTER Y 32 FT. - 0 INCH TOTAL LENGTH.
	6	1	1900992-006	WIRE ND1002181, TYPE 1 CLASS 1 22AWG WHT 4 FT. - 0 INCH TOTAL LENGTH.
16	7	1	MS3126F-24-61PW (1897047-611)	CONNECTOR PLUG
16	8	1	MS3126F-24-61SX (1897048-612)	CONNECTOR PLUG
10	9	5	1000242-011	FERRULE-ELECT. COND
10	10	3	1000243-009	FERRULE-ELECT. COND
10	11	8	1000242-005	FERRULE-ELECT. COND
10	12	4	1000243-004	FERRULE-ELECT. COND
10	13	14	1010490-198	INSULATION-SLEEVING, ELECT.
10	14	16	1010490-200	INSULATION-SLEEVING, ELECT.

MANNED SPACECRAFT CENTER HOUSTON, TEXAS | SIZE A | 1900992
SCALE-NONE | REV LTR B | SHEET 5 OF 13

MIL 2084 4-63

PENNANT LIST OF MATERIALS

NOTE	ITEM	QTY	PART NO	DESCRIPTION
10	15	1	1010490-258	INSULATION-SLEEVING, ELECT.
10	16	1	1016006-002	SPLICE REDUCER
10	17	2	1016128-011	IDENTIFICATION BAND
10	18	1	1016128-041	IDENTIFICATION BAND
	19	AR	MIL-T-713	LACING TAPE, TYPE P, CLASS 2, BLACK (ES-2732 NO. 18)
	20	1	1900992-007	ZIPPER TUBING ND1002155, TYPE 1 PLASTIC FLEXIBLE 7/8 DIA. 16 FT. 0 IN. TOTAL LENGTH
20	21			CONNECTOR PIN
21	22			CONNECTOR SOCKET
22	23	AR		1897147-112, 116, CABLE CLAMP SLEEVE

MANNED SPACECRAFT CENTER HOUSTON, TEXAS | SIZE A | 1900992
SCALE-NONE | REV LTR B | SHEET 6 OF 13

MIL 2084 4-63

CONDUCTOR INDIVIDUAL LENGTH NUMBER	ITEM NO.	2	FROM CUT WIRE OR SHIELD STRIP WIRE OR JACKET CIRCUIT POINT	2	T I N	2	TERMINATION SPEC.	1	ITEM NO.	NO.	TO CUT WIRE OR SHIELD STRIP WIRE OR JACKET CIRCUIT POINT	2	T I N	2	TERMINATION SPEC.	1	ITEM NO.	NO.
A 1	5								A 14								A 14	
A 1L			P1-V		25N				21		P2-V		25N				22	
A 1R			P1-T		25N				21		P2-T		25N				22	
A 1Y			P1-U		25N				21		P2-U		25N				22	
A 2	3		P1-W		25N				21		P2-W		25N				22	
A 3	3		P1-Y		25N				21		P2-Y		25N				22	
A 4	3		P1-Z		25N						P2-Z		25N				22	
A 5	1				23C		20C		9 10	5			23C		20C		9 A 13	7A
									A 13									
A 5A	6		SHLD A5		25N						E1		37N					
A 5L			P1-B*		25N				21		P2-B*		25N				22	
A 5R			P1-A*		25N				21		P2-A*		25N				22	
A 6	5								A 14								A 14	
A 6L			P1-E*		25N				21		P2-E*		25N				22	
A 6R			P1-C*		25N				21		P2-C*		25N				22	
A 6Y			P1-D*		25N				21		P2-D*		25N				22	
A 7	4								A 14								A 14	
A 7L			P1-G*		25N				21		P2-G*		25N				22	

1 THE STD CONDUCTOR TERMINATION FIGURES ARE PER
2 DIMENSIONS ARE IN INCHES AND TWO PLACE DECIMALS.

MANNED SPACECRAFT CENTER HOUSTON, TEXAS | SIZE A | 1900992
SCALE-NONE | REV LTR B | SHEET 7 OF 13

MIL 2084 - 4-63 WIR

CONDUCTOR INDIVIDUAL LENGTH NUMBER	ITEM NO.	2	FROM CUT WIRE OR SHIELD STRIP WIRE OR JACKET CIRCUIT POINT	2	T I N	2	TERMINATION SPEC.	1	ITEM NO.	NO.	TO CUT WIRE OR SHIELD STRIP WIRE OR JACKET CIRCUIT POINT	2	T I N	2	TERMINATION SPEC.	1	ITEM NO.	NO.
A 7R			P1-F*		25N				21		P2-F*		25N				22	
A 8	4								A 14								A 14	
A 8L			P1-I*		25N				21		P2-I*		25N				22	
A 8R			P1-H*		25N				21		P2-H*		25N				22	
A 9	4								A 14								A 14	
A 9L			P1-N*		25N				21		P2-N*		25N				22	
A 9R			P1-M*		25N				21		P2-M*		25N				22	
A 10	3		P1-P*		25N				21		P2-P*		25N				22	
A 11	2				23C		20C		11 12	5			23C		20C		11 A 13	7A
									A 13									
A 11A	6		SHLD A11		25N						E1		37N					
A 11W			P1-Q*		25N				21		P2-Q*		25N				22	
A 12	2				23C		20C		11 12	5			23C		20C		11 A 13	7A
									A 13									
A 12A	6		SHLD A12		25N						E1		37N					
A 12W			P1-R*		25N				21		P2-R*		25N				22	
A 13	2				23C		20C		11 12	5			23C		20C		11 A 13	7A
									A 13									

1 THE STD CONDUCTOR TERMINATION FIGURES ARE PER
2 DIMENSIONS ARE IN INCHES AND TWO PLACE DECIMALS.

MANNED SPACECRAFT CENTER HOUSTON, TEXAS | SIZE A | 1900992
SCALE-NONE | REV LTR B | SHEET 8 OF 13

MIL 2084 - 4-63 WIR

GIU CABLE W-42 B 1900992

CONDUCTOR INDIVIDUAL LENGTH NUMBER	ITEM NO.	2	FROM CUT WIRE OR SHIELD STRIP WIRE OR JACKET CIRCUIT POINT	2	T I N	2	TERMINATION SPEC. 1 ITEM NO.	NO.	TO CUT WIRE OR SHIELD STRIP WIRE OR JACKET CIRCUIT POINT	2	T I N	2	TERMINATION SPEC 1 ITEM NO.	NO.
A 13A	6		SHLD A13	25	N				E1	37	N			
A 13W			P1-S*	25	N		21		P2-S*	25	N		22	
A 14	3		P1-T*	25	N		21		P2-T*	25	N		22	
A 15	3		P1-U*	25	N		21		P2-U*	25	N		22	
A 16	3		P1-V*	25	N		21		P2-V*	25	N		22	
A 17	3		P1-W*	25	N		21		P2-W*	25	N		22	
A 18	3		P1-X*	25	N		21		P2-X*	25	N		22	
A 19	3		P1-AA	25	N		21		P2-AA	25	N		22	
A 20	3		P1-BB	25	N		21		P2-BB	25	N		22	
A 21	3		P1-CC	25	N		21		P2-CC	25	N		22	
A 22	3		P1-DD	25	N		21		P2-DD	25	N		22	
A 23	3		P1-EE	25	N		21		P2-EE	25	N		22	
A 24	3		P1-KK	25	N		21		P2-KK	25	N		22	
A 25	1			28	Q	25	Q 9 10	5		28	Q	25	Q 9 A 13 7A	
							A 13							
A 25A	6		SHLD A25	25	N				E1	37	N			
A 25L			P1-NN	25	N		21		P2-NN	25	N		22	
A 25R			P1-MM	25	N		21		P2-MM	25	N		22	

1 THE STD CONDUCTOR TERMINATION FIGURES ARE PER
2 DIMENSIONS ARE IN INCHES AND TWO PLACE DECIMALS.

MANNED SPACECRAFT CENTER HOUSTON, TEXAS | SIZE A | 1900992
SCALE - NONE | REV LTR B | SHEET 9 OF 13

MIL 2069 - 4-65 WIN

GIU CABLE W-42 B 1900992

CONDUCTOR INDIVIDUAL LENGTH NUMBER	ITEM NO.	2	FROM CUT WIRE OR SHIELD STRIP WIRE OR JACKET CIRCUIT POINT	2	T I N	2	TERMINATION SPEC. 1 ITEM NO.	NO.	TO CUT WIRE OR SHIELD STRIP WIRE OR JACKET CIRCUIT POINT	2	T I N	2	TERMINATION SPEC 1 ITEM NO.	NO.
A 26	3		P1-PP	25	N		21		P2-PP	25	N		22	
A 27	2			28	Q	25	Q 11 12	5		28	Q	25	Q 11 A 13 7A	
							A 13							
A 27A	6		SHLD A27	25	N				E1	37	N			
A 27W			P1-S	25	N		21		P2-S	25	N		22	
A 28	3		P1-M	25	N		21		P2-M	25	N		22	
A 29	3		P1-N	25	N		21		P2-N	25	N		22	
A 30	3		P1-P	25	N		21		P2-P	25	N		22	
A 31	3		P1-L	25	N		21		P2-L	25	N		22	
A 32	3		P1-LL	25	N		21		P2-LL	25	N		22	
A 33	3		P1-Z*	25	N		21		P2-Z*	25	N		22	
A 34	3		P1-FF	25	N		21		P2-FF	25	N		22	
A 35	3		P1-GG	25	N		21		P2-GG	25	N		22	
A 36	3		P1-HH	25	N		21		P2-HH	25	N		22	
A 37	3		P1-JJ	25	N		21		P2-JJ	25	N		22	
A 38	3		P1-K*	25	N		21		P2-K*	25	N		22	
A 39	3		P1-B	25	N		21		E1	37	N			
A 40	3		P1-J*	25	N		21		P2-J*	25	N		22	

1 THE STD CONDUCTOR TERMINATION FIGURES ARE PER
2 DIMENSIONS ARE IN INCHES AND TWO PLACE DECIMALS.

MANNED SPACECRAFT CENTER HOUSTON, TEXAS | SIZE A | 1900992
SCALE - NONE | REV LTR B | SHEET 10 OF 13

MIL 2069 - 4-65 WIN

GIU CABLE W-42 B 1900992

CONDUCTOR INDIVIDUAL LENGTH NUMBER	ITEM NO.	2	FROM CUT WIRE OR SHIELD STRIP WIRE OR JACKET CIRCUIT POINT	2	T I N	2	TERMINATION SPEC. 1 ITEM NO.	NO.	TO CUT WIRE OR SHIELD STRIP WIRE OR JACKET CIRCUIT POINT	2	T I N	2	TERMINATION SPEC 1 ITEM NO.	NO.
A 41	3		P1-Y*	25	N		21		P2-Y*	25	N		22	
A 42	3		P1-K	25	N		21		P2-K	25	N		22	
A 43			DELETED											
A 43L			DELETED											
A 43R			DELETED											
A 44	4						A 14						A 14	
A 44L			P1-F	25	N		21		P2-F	25	N		22	
A 44R			P1-E	25	N		21		P2-E	25	N		22	
A 45	4						A 14						A 14	
A 45L			P1-H	25	N		21		P2-H	25	N		22	
A 45R			P1-G	25	N		21		P2-G	25	N		22	
A 46	3		P1-J	25	N		21		P2-J	25	N		22	
A 47			DELETED											
A 48	3		P1-R	25	N		21		P2-R	25	N		22	
A 49	3		P1-X	25	N		21		P2-X	25	N		22	
A 50	1			33	Q	30	Q 9 10	5		33	Q	30	Q A 13 7A	
							A 13							
A 50A	6		SHLD A50	37	N				E1	37	N			

1 THE STD CONDUCTOR TERMINATION FIGURES ARE PER
2 DIMENSIONS ARE IN INCHES AND TWO PLACE DECIMALS.

MANNED SPACECRAFT CENTER HOUSTON, TEXAS | SIZE A | 1900992
SCALE - NONE | REV LTR B | SHEET 11 OF 13

MIL 2069 - 4-65 WIN

GIU CABLE W-42 B 1900992

CONDUCTOR INDIVIDUAL LENGTH NUMBER	ITEM NO.	2	FROM CUT WIRE OR SHIELD STRIP WIRE OR JACKET CIRCUIT POINT	2	T I N	2	TERMINATION SPEC. 1 ITEM NO.	NO.	TO CUT WIRE OR SHIELD STRIP WIRE OR JACKET CIRCUIT POINT	2	T I N	2	TERMINATION SPEC 1 ITEM NO.	NO.
A 50L			P1-C	25	N		21		P2-C	25	N		22	
A 50R			P1-A	25	N		21		P2-A	25	N		22	

1 THE STD CONDUCTOR TERMINATION FIGURES ARE PER
2 DIMENSIONS ARE IN INCHES AND TWO PLACE DECIMALS.

MANNED SPACECRAFT CENTER HOUSTON, TEXAS | SIZE A | 1900992
SCALE - NONE | REV LTR B | SHEET 12 OF 13

MIL 2069 - 4-65 WIN

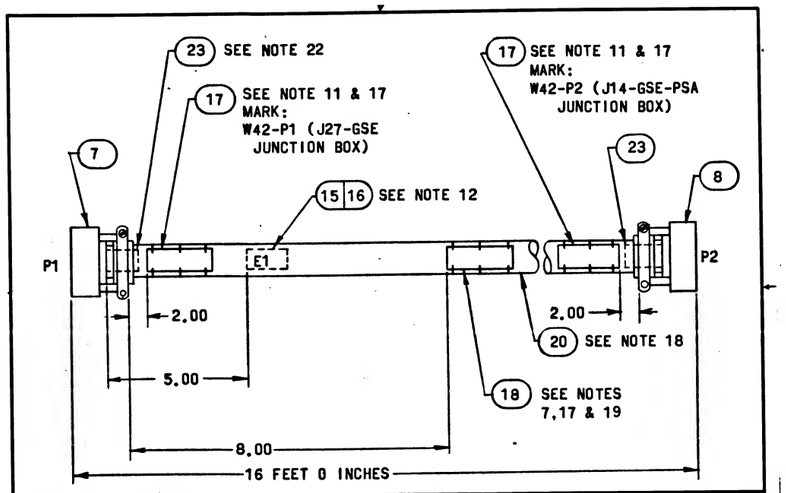

LOCATION TOLERANCE
(EXCEPT LENGTH)
+.50
-.50

MANNED SPACECRAFT CENTER HOUSTON, TEXAS	SIZE A	1900992
SCALE - NONE	REV LTR A	SHEET 13 of 13

GENERAL NOTES

NOTES

1 SEE CONDUCTOR CHART
2 SEE CONDUCTOR CHART
3 INTERPRET DRAWING IN ACCORDANCE WITH STANDARDS PRESCRIBED BY MIL-D-70327.
4 MARK CONDUCTOR IDENTIFICATION ON SINGLE CONDUCTORS PER ND1002019 OMITTING ALL SUFFIX LETTERS EXCEPT A AND B.
5 SPACING OF CONDUCTOR IDENTIFICATION SHALL BE EVERY 15 INCHES MAX AND AT EACH TERMINATION.
6 SPIRALLING OF THE MARKING IS ALLOWED.
7 IDENTIFY USING DRAWING NO. AND REVISION LETTER PER MIL-STD-130 (ES-267). .12 INCH HIGH CHARACTERS BLACK.
8 Y OR N IN TINNED COLUMN INDICATES YES OR NO.
9 A LETTER WITH AN ASTERISK SUFFIX, INDICATES A LOWER CASE LETTER.
10 VENDOR ITEM - SEE SPECIFICATION CONTROL DRAWING.
11 MARK IDENTIFICATION BAND WITH REFERENCE DESIGNATION AS NOTED .12 INCH HIGH COLOR BLACK, HOT IMPRESSION STAMPING PER ND1002019. CENTRALIZE.

MANNED SPACECRAFT CENTER HOUSTON, TEXAS	SIZE A	1900992	
SCALE - NONE	REV LTR +		SHEET 2 OF 12

MIL 2084 4-63

GENERAL NOTES

NOTES

12 MARK SLEEVING WITH REFERENCE DESIGNATIONS AS SHOWN .12 INCH HIGH, COLOR BLACK PER ND1002019.
13 MARK SLEEVING OF MULTI-CONDUCTORS WITH THE CONDUCTOR NUMBER .12 INCH HIGH, COLOR BLACK, PER ND1002019 WHEN SLEEVING ITEM NUMBERS FOLLOW AN A OR T IN THE ACCESSORIES ITEM NUMBER FIELD.
14 A OR T PREFIX IN THE ACCESSORIES ITEM NUMBER COLUMN INDICATES THE READING POSITION AWAY FROM TERMINATION OR TOWARD TERMINATION RESPECTIVELY, OF THE WIRE MARKER SLEEVE.
15 THE SUFFIX LETTER OF A CONDUCTOR IDENTIFICATION NUMBER INDICATES CONDUCTOR SHIELDING, COLOR, OR MARKING.
A - FROM END SHIELD
L - WHITE WITH BLUE TRACER OR WHITE WITH LETTER "L"
R - WHITE WITH RED TRACER OR WHITE WITH LETTER "R"
Y - WHITE WITH YELLOW TRACER OR WHITE WITH LETTER "Y"
W - WHITE
16 ASSEMBLE CONTACTS IN ALL CONNECTOR GROMMET HOLES.
17 SECURE TO CABLE USING ITEM 19, MARKING TO READ AWAY FROM CONNECTOR
18 SEAL ZIPPER TUBING PER ND 1002153
19 SERIALIZE PER ND 1002023
20 THIS ITEM FURNISHED WITH ITEM 7
21 THIS ITEM FURNISHED WITH ITEM 8

MANNED SPACECRAFT CENTER HOUSTON, TEXAS	SIZE A	1900992	
SCALE - NONE	REV LTR +		SHEET 3 OF 12

MIL 2084 4-63

FOR INFORMATION ONLY

CLASS B RELEASE TDR No. 05663 DATE 1/7/64

REVISIONS

DESCRIPTION	DATE	APPROVAL
-		

APPLICATION

NEXT ASSY	USED ON	SYM
1900005-011	1900005-011	

REV												
SHEET												
REV STATUS	+	+	+	+	+	+	+	+	+	+	+	+
OF SHEETS / SHEET	1	2	3	4	5	6	7	8	9	10	11	12

MANNED SPACECRAFT CENTER HOUSTON, TEXAS

CABLE INTERCONNECT W42
ISS TESTING

AC SPARK PLUG DIVISION, GMC
MILWAUKEE, WISCONSIN

ACSP PN

DRAWN 11 NOV 63
CHECKED DATE 20 NOV 63
APPROVAL 20 NOV 63
APPROVAL 1/3/64

NASA APPROVAL
MIT APPROVAL
CONTRACT NAS 9-497

CODE IDENT NO. | SIZE A | 1900992 | REV +
SCALE | SHEET 1 OF 12

GENERAL NOTES

TOLERANCE CHART, UNLESS OTHERWISE SPECIFIED ---

APPLICABLE LENGTH FOR WIRE OR CABLE, STRIP WIRE, STRIP JACKET, CUT WIRE OR CUT SHIELD	TOLERANCE				
	WIRE OR CABLE	STRIP WIRE	STRIP JACKET	CUT WIRE	CUT SHIELD
UNDER 1 INCH	+ .06-.00	+.03-.00	+.06-.06	+.06-.06	+.06-.06
1 INCH TO 6 INCHES	+ .50-.00	+.06-.00	+.25-.25	+.25-.25	+.25-.25
6 INCHES TO 6 FEET	+1.00-.00		+.50-.50	+.50-.50	+.50-.50
OVER 6 FEET	+2.00-.00				

MANNED SPACECRAFT CENTER HOUSTON, TEXAS	SIZE A	1900992	
SCALE - NONE	REV LTR +		SHEET 4 OF 12

MIL 2084 4-63

INCHES 0 1 2
PHOTOGRAPHIC SCALE ONLY

LIST OF MATERIAL

SEE NOTE	ITEM	REQ'D	PART NUMBER	DESCRIPTION
10	13	12	1010490-198	INSULATION - SLEEVING, ELECT
10	14	18	1010490-200	INSULATION - SLEEVING, ELECT
10	15	1	1010490-258	INSULATION - SLEEVING, ELECT
10	16	1	1016006-002	SPLICE REDUCER
10	17	2	1016128-011	IDENTIFICATION BAND
10	18	1	1016128-041	IDENTIFICATION BAND
1[illegible]	19	AR	MIL-T-713	LACING TAPE, TYPE P, CLASS 2, BLACK (ES 2732 NO.18)
	20	1	1900992-007	ZIPPER TUBING ND 1002155, TYPE 1 PLASTIC FLEXIBLE 7/8 DIA 16 FT. 0 IN TOTAL LENGTH
20	21			CONNECTOR PIN
21	22			CONNECTOR SOCKET

MANNED SPACECRAFT CENTER HOUSTON, TEXAS	SIZE A	1900992
SCALE - NONE	REV LTR +	SHEET 6 OF 12

MIL 2084 4-63

LIST OF MATERIAL

SEE NOTE	ITEM	REQ'D	PART NUMBER	DESCRIPTION
	1	1	1900992-001	WIRE ND 1002181, TYPE 2, CLASS 4 WHT JAKT 20 AWG WHT/BLU, WHT/RED 32 FT - 0 INCH TOTAL LENGTH.
	2	1	1900992-002	WIRE ND 1002181, TYPE 1, CLASS 4 WHT JAKT 20 AWG WHITE 64 FT. - 0 INCH TOTAL LENGTH.
	3	1	1900992-003	WIRE ND 1002181, TYPE 1, CLASS 1, WHT JAKT 20 AWG WHITE 544 FT. - 0 INCH TOTAL LENGTH
	4	1	1900992-004	WIRE ND 1002181, TYPE 2, CLASS 1 T2 20 AWG WHITE WITH LETTER L WHITE WITH LETTER R 96 FT-0 INCH TOTAL LENGTH
	5	1	1900992-005	WIRE ND 1002181, TYPE 3, CLASS 1 T3 20 AWG WHITE WITH LETTER L WHITE WITH LETTER R, WHITE WITH LETTER Y 32 FT - 0 INCH TOTAL LENGTH.
	6	1	1900992-006	WIRE ND 1002181, TYPE 1 CLASS 1 22 AWG WHITE 4 FT - 0 INCH TOTAL LENGTH.
16	7	1	MS3126F-24-61PW	(1897047-611) CONNECTOR PLUG
16	8	1	MS3126F-24-61SX	(1897048-612) CONNECTOR PLUG
10	9	4	1000242-11	FERRULE-ELECT COND
10	10	2	1000243-9	FERRULE-ELECT COND
10	11	8	1000242-5	FERRULE-ELECT COND
10	12	4	1000243-4	FERRULE-ELECT COND

MANNED SPACECRAFT CENTER HOUSTON, TEXAS	SIZE A	1900992
SCALE - NONE	REV LTR +	SHEET 5 OF 12

MIL 2084 4-63

GIU CABLE W-42 + 1900992

CONDUCTOR INDIVIDUAL LENGTH NUMBER	ITEM NO. [2]	FROM CUT WIRE OR SHIELD STRIP WIRE OR JACKET CIRCUIT POINT	[2]	T I N	[2]	TERMINATION SPEC. [1] ITEM NO.	NO.	TO CUT WIRE OR SHIELD STRIP WIRE OR JACKET CIRCUIT POINT	[2]	T I N	[2]	TERMINATION SPEC [1] ITEM NO.	NO.
A 1	5					A 14						A 14	
A 1L		P1-V		25N		21		P2-V		25N		22	
A 1R		P1-T		25N		21		P2-T		25N		22	
A 1Y		P1-U		25N		21		P2-U		25N		22	
A 2	3	P1-W		25N		21		P2-W		25N		22	
A 3	3	P1-Y		25N		21		P2-Y		25N		22	
A 4	3	P1-Z		25N				P2-Z		25N		22	
A 5	1		230		200	9 10	5		230		200	9 A 13 7A	
						A 13							
A 5A	6	SHLD A5		25N				E1		37N			
A 5L		P1-B*		25N		21		P2-B*		25N		22	
A 5R		P1-A*		25N		21		P2-A*		25N		22	
A 6	5					A 14						A 14	
A 6L		P1-E*		25N		21		P2-E*		25N		22	
A 6R		P1-C*		25N		21		P2-C*		25N		22	
A 6Y		P1-D*		25N		21		P2-D*		25N		22	
A 7	4					A 14						A 14	
A 7L		P1-G*		25N		21		P2-G*		25N		22	

[1] THE STD CONDUCTOR TERMINATION FIGURES ARE PER
[2] DIMENSIONS ARE IN INCHES AND TWO PLACE DECIMALS.

MANNED SPACECRAFT CENTER HOUSTON, TEXAS	SIZE A	1900992
SCALE - NONE	REV LTR +	SHEET 7 OF 12

MIL 2085 - 4-63 WIR

GIU CABLE W-42 + 1900992

CONDUCTOR INDIVIDUAL LENGTH NUMBER	ITEM NO. [2]	FROM CUT WIRE OR SHIELD STRIP WIRE OR JACKET CIRCUIT POINT	[2]	T I N	[2]	TERMINATION SPEC. [1] ITEM NO.	NO.	TO CUT WIRE OR SHIELD STRIP WIRE OR JACKET CIRCUIT POINT	[2]	T I N	[2]	TERMINATION SPEC [1] ITEM NO.	NO.
A 7R		P1-F*		25N		21		P2-F*		25N		22	
A 8	4					A 14						A 14	
A 8L		P1-I*		25N		21		P2-I*		25N		22	
A 8R		P1-H*		25N		21		P2-H*		25N		22	
A 9	4					A 14						A 14	
A 9L		P1-N*		25N		21		P2-N*		25N		22	
A 9R		P1-M*		25N		21		P2-M*		25N		22	
A 10	3	P1-P*		25N		21		P2-P*		25N		22	
A 11	2		230		200	11 12	5		230		200	11 A 13 7A	
						A 13							
A 11A	6	SHLD A11		25N				E1		37N			
A 11W		P1-Q*		25N		21		P2-Q*		25N		22	
A 12	2		230		200	11 12	5		230		200	11 A 13 7A	
						A 13							
A 12A	6	SHLD A12		25N				E1		37N			
A 12W		P1-R*		25N		21		P2-R*		25N		22	
A 13	2		230		200	11 12	5		230		200	11 A 13 7A	
						A 13							

[1] THE STD CONDUCTOR TERMINATION FIGURES ARE PER
[2] DIMENSIONS ARE IN INCHES AND TWO PLACE DECIMALS.

MANNED SPACECRAFT CENTER HOUSTON, TEXAS	SIZE A	1900992
SCALE - NONE	REV LTR +	SHEET 8 OF 12

MIL 2085 - 4-63 WIR

INCHES 0 1 2
PHOTOGRAPHIC SCALE ONLY

G1U CABLE W-42 + 1900992

CONDUCTOR INDIVIDUAL LENGTH NUMBER	ITEM NO. (2)		FROM CUT WIRE OR SHIELD STRIP WIRE OR JACKET CIRCUIT POINT (2)	TIN (2)	TERMINATION SPEC. (1) ITEM NO.	NO.	TO CUT WIRE OR SHIELD STRIP WIRE OR JACKET CIRCUIT POINT (2)	TIN (2)	TERMINATION SPEC. (1) ITEM NO.	NO.
A 26	3		P1-PP	25N	21		P2-PP	25N	22	
A 27	2			280 250	11 12	5		280 250	11 A 13 7A	
					A 13					
A 27A	6		SHLD A27	25N			E1	37N		
A 27W			P1-S	25N	21		P2-S	25N	22	
A 28	3		P1-M	25N	21		P2-M	25N	22	
A 29	3		P1-N	25N	21		P2-N	25N	22	
A 30	3		P1-P	25N	21		P2-P	25N	22	
A 31	3		P1-L	25N	21		P2-L	25N	22	
A 32	3		P1-LL	25N	21		P2-LL	25N	22	
A 33	3		P1-Z*	25N	21		P2-Z*	25N	22	
A 34	3		P1-FF	25N	21		P2-FF	25N	22	
A 35	3		P1-GG	25N	21		P2-GG	25N	22	
A 36	3		P1-HH	25N	21		P2-HH	25N	22	
A 37	3		P1-JJ	25N	21		P2-JJ	25N	22	
A 38	3		P1-K*	25N	21		P2-K*	25N	22	
A 39	3		P1-B	25N	21		E1	37N		
A 40	3		P1-J*	25N	21		P2-J*	25N	22	

(1) THE STD CONDUCTOR TERMINATION FIGURES ARE PER
(2) DIMENSIONS ARE IN INCHES AND TWO PLACE DECIMALS.

MANNED SPACECRAFT CENTER HOUSTON, TEXAS | SIZE A | 1900992
SCALE - NONE | REV LTR + | SHEET 10 OF 12

MIL 2085 - 4-63 WIR

G1U CABLE W-42 + 1900992

CONDUCTOR INDIVIDUAL LENGTH NUMBER	ITEM NO. (2)		FROM CUT WIRE OR SHIELD STRIP WIRE OR JACKET CIRCUIT POINT (2)	TIN (2)	TERMINATION SPEC. (1) ITEM NO.	NO.	TO CUT WIRE OR SHIELD STRIP WIRE OR JACKET CIRCUIT POINT (2)	TIN (2)	TERMINATION SPEC (1) ITEM NO.	NO.
A 41	3		P1-Y*	25N	21		P2-Y*	25N	22	
A 42	3		P1-K	25N	21		P2-K	25N	22	
A 43	4				A 14				A 14	
A 43L			P1-D	25N	21		P2-D	25N	22	
A 43R			P1-C	25N	21		P2-C	25N	22	
A 44	4				A 14				A 14	
A 44L			P1-F	25N	21		P2-F	25N	22	
A 44R			P1-E	25N	21		P2-F	25N	22	
A 45	4				A 14				A 14	
A 45L			P1-H	25N	21		P2-H	25N	22	
A 45R			P1-G	25N	21		P2-G	25N	22	
A 46	3		P1-J	25N	21		P2-J	25N	22	
A 47	3		P1-A	25N	21		P2-A	25N	22	
A 48	3		P1-R	25N	21		P2-R	25N	22	
A 49	3		P1-X	25N	21		P2-X	25N	22	

(1) THE STD CONDUCTOR TERMINATION FIGURES ARE PER
(2) DIMENSIONS ARE IN INCHES AND TWO PLACE DECIMALS.

MANNED SPACECRAFT CENTER HOUSTON, TEXAS | SIZE A | 1900992
SCALE - NONE | REV LTR + | SHEET 11 OF 12

MIL 2085 - 4-63 WIR

G1U CABLE W-42 + 1900992

CONDUCTOR INDIVIDUAL LENGTH NUMBER	ITEM NO. (2)		FROM CUT WIRE OR SHIELD STRIP WIRE OR JACKET CIRCUIT POINT (2)	TIN (2)	TERMINATION SPEC. (1) ITEM NO.	NO.	TO CUT WIRE OR SHIELD STRIP WIRE OR JACKET CIRCUIT POINT (2)	TIN (2)	TERMINATION SPEC (1) ITEM NO.	NO.
A 13A	6		SHLD A13	25N			E1	37N		
A 13W			P1-S*	25N	21		P2-S*	25N	22	
A 14	3		P1-T*	25N	21		P2-T*	25N	22	
A 15	3		P1-U*	25N	21		P2-U*	25N	22	
A 16	3		P1-V*	25N	21		P2-V*	25N	22	
A 17	3		P1-W*	25N	21		P2-W*	25N	22	
A 18	3		P1-X*	25N	21		P2-X*	25N	22	
A 19	3		P1-AA	25N	21		P2-AA	25N	22	
A 20	3		P1-BB	25N	21		P2-BB	25N	22	
A 21	3		P1-CC	25N	21		P2-CC	25N	22	
A 22	3		P1-DD	25N	21		P2-DD	25N	22	
A 23	3		P1-EE	25N	21		P2-EE	25N	22	
A 24	3		P1-KK	25N	21		P2-KK	25N	22	
A 25	1			280 250	9 10	5		280 250	9 A 13 7A	
					A 13					
A 25A	6		SHLD A25	25N			E1	37N		
A 25L			P1-NN	25N	21		P2-NN	25N	22	
A 25R			P1-MM	25N	21		P2-MM	25N	22	

(1) THE STD CONDUCTOR TERMINATION FIGURES ARE PER
(2) DIMENSIONS ARE IN INCHES AND TWO PLACE DECIMALS.

MANNED SPACECRAFT CENTER HOUSTON, TEXAS | SIZE A | 1900992
SCALE - NONE | REV LTR + | SHEET 9 OF 12

MIL 2085 - 4-63 WIR

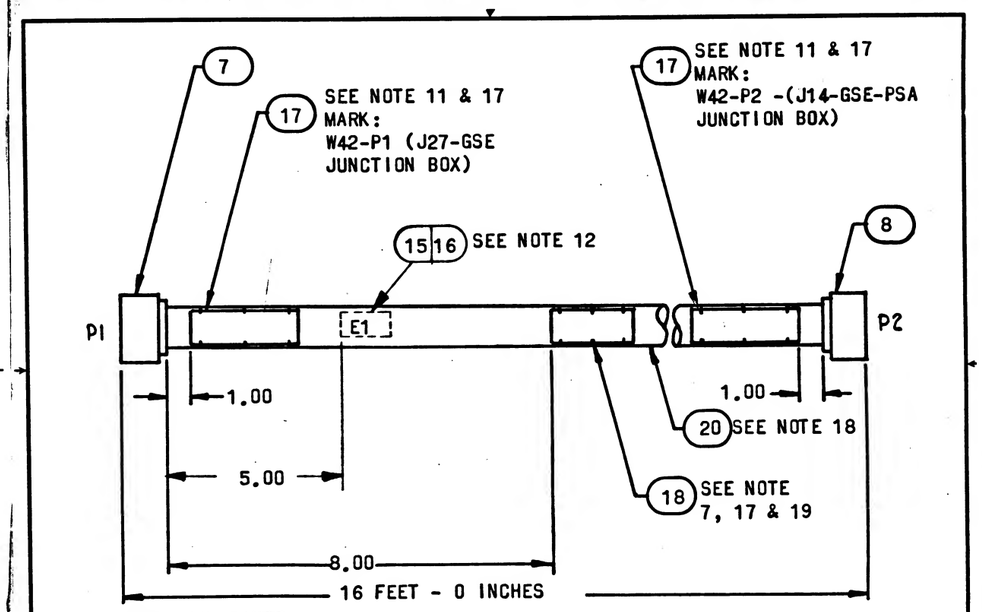

LOCATION TOLERANCE (EXCEPT LENGTH)
+.50
-.50

MANNED SPACECRAFT CENTER HOUSTON, TEXAS | SIZE A | 1900992
SCALE - NONE | REV LTR + | SHEET 12 OF 12

MIL 2084 4-63

INCHES 0 1 2
PHOTOGRAPHIC SCALE ONLY

PENNANT NOTE — GENERAL NOTES

1. SEE CONDUCTOR CHART. PENNANT NOTE 1.
2. SEE CONDUCTOR CHART. PENNANT NOTE 2.
3. INTERPRET DRAWING IN ACCORDANCE WITH STANDARDS PRESCRIBED BY MIL-D-70327.
4. MARK CONDUCTOR IDENTIFICATION ON SINGLE CONDUCTORS PER ND1002019 OMITTING ALL SUFFIX LETTERS EXCEPT A AND B.
5. SPACING OF CONDUCTOR IDENTIFICATION SHALL BE EVERY 15 INCHES MAX. AND AT EACH TERMINATION.
6. SPIRALLING OF THE MARKING IS ALLOWED.
7. IDENTIFY USING DRAWING NO. AND REVISION LETTER PER MIL-STD-130 (ES-267). .12 INCH HIGH CHARACTERS WHITE.
8. Y OR N IN TINNED COLUMN INDICATES YES OR NO.
9. A LETTER WITH AN ASTERISK SUFFIX. INDICATES A LOWER CASE LETTER.
10. VENDOR ITEM - SEE SPECIFICATION CONTROL DRAWING.
11. MARK IDENTIFICATION BAND WITH REFERENCE DESIGNATION AS NOTED .12 INCH HIGH COLOR WHITE. HOT IMPRESSION STAMPING PER ND1002019. CENTRALIZE.
12. MARK SLEEVING WITH REFERENCE DESIGNATIONS AS SHOWN .12 INCH HIGH. COLOR BLACK PER ND1002019.
13. MARK SLEEVING OF MULTI-CONDUCTORS WITH THE CONDUCTOR NUMBER .12 INCH HIGH. COLOR BLACK. PER ND1002019 WHEN SLEEVING ITEM NUMBERS FOLLOW AN A OR T IN THE ACCESSORIES ITEM NUMBER FIELD.

MANNED SPACECRAFT CENTER HOUSTON, TEXAS	SIZE A	1900993
SCALE - NONE	REV LTR A	SHEET 2 OF 13

PENNANT NOTE — GENERAL NOTES

14. A OR T PREFIX IN THE ACCESSORIES ITEM NUMBER COLUMN INDICATES THE READING POSITION AWAY FROM TERMINATION OR TOWARD TERMINATION RESPECTIVELY. OF THE WIRE MARKER SLEEVE.
15. THE SUFFIX LETTER OF A CONDUCTOR IDENTIFICATION NUMBER INDICATES CONDUCTOR SHIELDING. COLOR. OR MARKING.
    - A - FROM END SHIELD
    - L - WHITE WITH BLUE TRACER
    - R - WHITE WITH RED TRACER
    - Y - WHITE WITH YELLOW TRACER
16. ASSEMBLE CONTACTS IN ALL CONNECTOR GROMMET HOLES
17. SECURE TO CABLE USING ITEM 21. MARKING TO READ AWAY FROM CONNECTOR
18. SEAL ZIPPER TUBING PER ND1002153.
19. SERIALIZE PER ND1002023
20. THIS ITEM FURNISHED WITH ITEM 5
21. ITEM 23 SHALL BE SHORTENED WHEN NECESSARY TO AVOID INTERFERENCE WITH FERRULES AND MAY BE CUT LENGTHWISE ON ONE SIDE. SELECT ONE OR MORE OF ITEM 23 AS REQUIRED TO FIT.
22. SEE NOTES 10 AND 16

MANNED SPACECRAFT CENTER HOUSTON, TEXAS	SIZE A	1900993
SCALE - NONE	REV LTR A	SHEET 3 OF 13

FOR INFORMATION ONLY

CLASS B RELEASE TDR No. 05663 DATE 1/7/64

REVISIONS

SYM	DESCRIPTION	DATE	APPROVAL
A	CHANGE IN ACCORDANCE WITH CM-193773	17 FEB 64	
B	CHANGE IN ACCORDANCE WITH CM 195644 TDR C/P01	24 MAR 64	
C	CHANGE IN ACCORDANCE WITH CM-196134 TDR 09102	14 APR 64	J.J.J.
D	CHANGE IN ACCORDANCE WITH CM-197542 TDR R 10688 REVISED CUSTOMER DATA 12-64	27 MAY 64	R.B.

APPLICATION	
NEXT ASSY	USED ON
1901308	1900005-011

REV SHEET													
REV STATUS	D	A	A	D	+	B	+	D	+	D			
OF SHEETS / SHEET	1	2	3	4	5	6	7	8	9	10	11	12	13

Chuckles 2/20/65

AC SPARK PLUG DIVISION, GMC MILWAUKEE, WISCONSIN

MANNED SPACECRAFT CENTER HOUSTON, TEXAS

ACSP PN

CABLE, INTERCONNECT W48 ISS, OSS TESTING

DRAWN — DATE 11/16/63
CHECKED — DATE 20 NOV 63
APPROVAL — 20 NOV 63
APPROVAL

CODE IDENT NO.	SIZE		REV
	A	1900993	D
NASA APPROVAL			
MIT APPROVAL			
CONTRACT NAS 9-497	SCALE		SHEET 1 OF 13

PENNANT NOTE — GENERAL NOTES

TOLERANCE CHART. UNLESS OTHERWISE SPECIFIED ---

APPLICABLE LENGTH FOR WIRE OR CABLE. STRIP WIRE. STRIP JACKET. CUT WIRE OR CUT SHIELD.	TOLERANCE				
	WIRE OR CABLE	STRIP WIRE	STRIP JACKET	CUT WIRE	CUT SHIELD
UNDER 1 INCH	+ .06-.00	+.03-.00	+.06-.06	+.06-.06	+.06-.06
1 INCH TO 6 INCHES	+ .50-.00	+.06-.00	+.25-.25	+.25-.25	+.25-.25
6 INCHES TO 6 FEET	+1.00-.00		+.50-.50	+.50-.50	+.50-.50
OVER 6 FEET	+2.00-.00				

MANNED SPACECRAFT CENTER HOUSTON, TEXAS	SIZE A	1900993
SCALE - NONE	REV LTR A	SHEET 4 OF 13

PENNANT LIST OF MATERIALS

NOTE	ITEM	QTY	PART NO	DESCRIPTION
	1	1	1900993-001	WIRE ND1002181 TYPE 2 CLASS 4 WHT JAKT 22AWG WHT/BLU, WHT/RED - 176 FT. TOTAL LENGTH.
	2	1	1900993-002	WIRE ND1002181 TYPE 1 CLASS 4 WHT JAKT 22AWG WHT, 64 FT. TOTAL LENGTH
	3	1	1900993-003	WIRE ND1002181 TYPE 3, CLASS 4 WHT JAKT 22AWG WHT/RED, WHT/BLU, WHT/YEL 48 FT. TOTAL LENGTH.
	4	1	1900993-004	WIRE ND1002181 TYPE 1, CLASS 1, 22AWG, WHT 75 FT. TOTAL LENGTH.
16	5	1	MS3126F-24-61P (1897047-610)	CONNECTOR-PLUG
22	6	1	1010411-002	CONNECTOR
10	7	11	1000243-008	FERRULE, ELEC. COND
10	8	11	1000242-007	FERRULE, ELEC. COND
10	9	3	1000243-011	FERRULE, ELEC. COND
10	10	3	1000242-011	FERRULE, ELEC. COND
10	11	4	1000243-003	FERRULE, ELEC. COND
10	12	4	1000242-002	FERRULE, ELEC. COND
10	13	3	1010490-250	INSULATION, SLEEVING, ELECT.
10	14	32	1010490-198	INSULATION, SLEEVING, ELECT.
10	15	4	1010490-200	INSULATION, SLEEVING, ELECT.
10	16	108	1010464-002	CONNECTOR, CONTACTS, SOCKET

MANNED SPACECRAFT CENTER HOUSTON, TEXAS | SIZE A | 1900993
SCALE-NONE | REV LTR A | SHEET 5 OF 13

PENNANT LIST OF MATERIALS

NOTE	ITEM	QTY	PART NO	DESCRIPTION
10	17	3	1016006-002	SPLICE REDUCER
10	18	1	1016128-011	BAND, IDENTIFICATION
10	19	2	1016128-041	BAND, IDENTIFICATION
	20	1	1900993-005	ZIPPER TUBING ND1002155, TYPE 1, PLASTIC, FLEXIBLE 1.00 DIA. 16 FT. TOTAL LENGTH.
	21	AR	MIL-T-713	LACING TAPE, TYPE P, CLASS 2 BLACK (ES-2792)
20	22			CONNECTOR CONTACTS, PIN
21	23			1897147-106, 108, 112, CABLE CLAMP SLEEVE
10	24	1	1016282-024	RUBBER GROMMET
10	25	1	1015902-046	TERMINAL LUG
	26	1	1900903-006	TUBING, MODIFIED POLYVINYL CHLORIDE FLEXIBLE, SHRINK-FIT PER 1016175-006 6 INCH TOTAL LENGTH

MANNED SPACECRAFT CENTER HOUSTON, TEXAS | SIZE A | 1900993
SCALE-NONE | REV LTR D | SHEET 6 OF 13

CONDUCTOR INDIVIDUAL LENGTH NUMBER	ITEM NO.	2	FROM CUT WIRE OR SHIELD STRIP WIRE OR JACKET CIRCUIT POINT	2	TIN	2	TERMINATION SPEC. 1 ITEM NO.				NO.	TO CUT WIRE OR SHIELD STRIP WIRE OR JACKET CIRCUIT POINT	2	TIN	2	TERMINATION SPEC. 1 ITEM NO.				NO.
A 1	4		P1-A*	22N			22					P2- 30	22N			16					
A 2	2			230		200	12	11		5			230		200	A	15		7A		
							A	14													
A 2A	4		SHLD A2	37N								E1	37N								
A 2W			P1-B*	22N			22					P2- 12	22N			16					
A 3	1			230		200	8	7		5			230		200	A	14		7A		
							A	14													
A 3A	4		SHLD A3	37N								E1	37N								
A 3L			P1-D*	22N			22					P2- 14	22N			16					
A 3R			P1-C*	22N			22					P2- 1	22N			16					
A 4	4		P1-DD	22N			22					P2- 15	22N			16					
A 5	1			230		200	8	7		5			230		200	A	14		7A		
							A	14													
A 5A	4		SHLD A5	37N								E1	37N								
A 5L			P1-F*	22N			22					P2- 57	22N			16					
A 5R			P1-E*	22N			22					P2- 67	22N			16					
A 6	1			230		200	8	7		5			230		200	A	14		7A		
							A	14													

1 THE STD CONDUCTOR TERMINATION FIGURES ARE PER
2 DIMENSIONS ARE IN INCHES AND TWO PLACE DECIMALS.

MANNED SPACECRAFT CENTER HOUSTON, TEXAS | SIZE A | 1900993
SCALE-NONE | REV LTR + | SHEET 7 OF 13

CONDUCTOR INDIVIDUAL LENGTH NUMBER	ITEM NO.	2	FROM CUT WIRE OR SHIELD STRIP WIRE OR JACKET CIRCUIT POINT	2	TIN	2	TERMINATION SPEC. 1 ITEM NO.				NO.	TO CUT WIRE OR SHIELD STRIP WIRE OR JACKET CIRCUIT POINT	2	TIN	2	TERMINATION SPEC. 1 ITEM NO.				NO.
A 6A	4		SHLD A6	37N								E1	37N								
A 6L			P1-H*	22N			22					P2- 45	22N			16					
A 6R			P1-G*	22N			22					P2- 35	22N			16					
A 7	2			280		250	12	11		5			280		250	A	15		7A		
							A	14													
A 7A	4		SHLD A7	37N								E1	37N								
A 7W			P1-I*	22N			22					P2- 34	22N			16					
A 8	1			280		250	8	7		5			280		250	A	14		7A		
							A	14													
A 8A	4		SHLD A8	37N								E1	37								
A 8L			P1-K*	22N			22					P2- 6	22N			16					
A 8R			P1-J*	22N			22					P2- 20	22N			16					
A 9	1			280		250	8	7		5			280		250	A	14		7A		
							A	14													
A 9A	4		SHLD A9	37N								E2	37N								
A 9L			P1-N*	22N			22					P2- 7	22N			16					
A 9R			P1-M*	22N			22					P2- 21	22N			16					
A 10	1			280		250	8	7		5			280		250	A	14		7A		

1 THE STD CONDUCTOR TERMINATION FIGURES ARE PER
2 DIMENSIONS ARE IN INCHES AND TWO PLACE DECIMALS.

MANNED SPACECRAFT CENTER HOUSTON, TEXAS | SIZE A | 1900993
SCALE-NONE | REV LTR + | SHEET 8 OF 13

GIW CABLE W-48 B 1900993

CONDUCTOR INDIVIDUAL LENGTH NUMBER	ITEM NO.	2	FROM CUT WIRE OR SHIELD STRIP WIRE OR JACKET CIRCUIT POINT	2	T I N	2	TERMINATION SPEC 1 ITEM NO.				NO.	TO CUT WIRE OR SHIELD STRIP WIRE OR JACKET CIRCUIT POINT	2	T I N	2	TERMINATION SPEC 1 ITEM NO.				NO.
							A 14													
A 10A	4		SHLD A10		37N							E2		37N						
A 10L			P1-Q*		22N		22					P2- 90		22N		16				
A 10R			P1-P*		22N		22					P2-104		22N		16				
A 11	1			33C		30C	8	7	5				33C		30C	A 14		7A		
							A 14													
A 11A	4		SHLD A11		37N							E2		37N						
A 11L			P1-S*		22N		22					P2- 86		22N		16				
A 11R			P1-R*		22N		22					P2-100		22N		16				
A 12	1			33C		30C	8	7	5				33C		30C	A 14		7A		
							A 14													
A 12A	4		SHLD A12		37N							E2		37N						
A 12L			P1-U*		22N		22					P2- 87		22N		16				
A 12R			P1-T*		22N		22					P2-101		22N		16				
A 13	3			33C		30C	10	9	5				33C		30C	A 14		7A		
							A 14													
A 13A	4		SHLD A13		37N							P1-C		22N						
A 13L			P1-W*		22N		22					P2-108		22N		16				

1 THE STD CONDUCTOR TERMINATION FIGURES ARE PER
2 DIMENSIONS ARE IN INCHES AND TWO PLACE DECIMALS.

MANNED SPACECRAFT CENTER HOUSTON, TEXAS | SIZE A | 1900993
SCALE-NONE | REV LTR B | SHEET 9 OF 13

MIL 2085 - 4-63 WIR

GIW CABLE W-48 + 1900993

CONDUCTOR INDIVIDUAL LENGTH NUMBER	ITEM NO.	2	FROM CUT WIRE OR SHIELD STRIP WIRE OR JACKET CIRCUIT POINT	2	T I N	2	TERMINATION SPEC 1 ITEM NO.				NO.	TO CUT WIRE OR SHIELD STRIP WIRE OR JACKET CIRCUIT POINT	2	T I N	2	TERMINATION SPEC 1 ITEM NO.				NO.
A 13R			P1-V*		22N		22					P2-107		22N		16				
A 13Y			P1-X*		22N		22					P2- 94		22N		16				
A 14	1			33C		30C	8	7	5				33C		30C	A 14		7A		
							A 14													
A 14A	4		SHLD A14		37N							E2		37N						
A 14L			P1-Z*		22N		22					P2- 50		22N		16				
A 14R			P1-Y*		22N		22					P2- 60		22N		16				
A 15	1			38C		35C	8	7	5				38C		35C	A 14		7A		
							A 14													
A 15A	4		SHLD A15		37N							E3		37N						
A 15L			P1-CC		22N		22					P2- 2		22N		16				
A 15R			P1-BB		22N		22					P2- 3		22N		16				
A 16	4		P1-AA		22N		22					P2- 16		22N		16				
A 17	3			38C		35C	10	9	5				38C		35C	A 14		7A		
							A 14													
A 17A	4		SHLD A17		37N							E3		37N						
A 17L			P1-FF		22N		22					P2-105		22N		16				
A 17R			P1-EE		22N		22					P2- 92		22N		16				

1 THE STD CONDUCTOR TERMINATION FIGURES ARE PER
2 DIMENSIONS ARE IN INCHES AND TWO PLACE DECIMALS.

MANNED SPACECRAFT CENTER HOUSTON, TEXAS | SIZE A | 1900993
SCALE-NONE | REV LTR + | SHEET 10 OF 13

MIL 2085 - 4-63 WIR

GIW CABLE W-48 D 1900993

CONDUCTOR INDIVIDUAL LENGTH NUMBER	ITEM NO.	2	FROM CUT WIRE OR SHIELD STRIP WIRE OR JACKET CIRCUIT POINT	2	T I N	2	TERMINATION SPEC 1 ITEM NO.				NO.	TO CUT WIRE OR SHIELD STRIP WIRE OR JACKET CIRCUIT POINT	2	T I N	2	TERMINATION SPEC 1 ITEM NO.				NO.
A 17Y			P1-GG		22N		22					P2-106		22N		16				
A 18	3			38C		35C	10	9	5				38C		35C	A 14		7A		
							A 14													
A 18A	4		SHLD A18		37N							E3		37N						
A 18L			P1-JJ		22N		22					P2- 31		22N		16				
A 18R			P1-HH		22N		22					P2- 32		22N		16				
A 18Y			P1-KK		22N		22					P2- 43		22N		16				
A 19	1			38C		35C	8	7	5				38C		35C	A 14		7A		
							A 14													
A 19A	4		SHLD A19		37N							E3		37N						
A 19L			P1-MM		22N		22					P2- 29		22N		16				
A 19R			P1-LL		22N		22					P2- 28		22N		16				
A 20	4		P3- 1		25N		25					P2- 41		22N		16				
A 21	2			43C		40C	12	11					43C		40C	A 15		7A		
							A 14													
A 21A	4		SHLD A21		37N							E3		37N						
A 21W			P1-NN		22N		22					P2- 11		22N		16				
A 22	2			43C		40C	12	11					43C		40C	A 15		7A		

1 THE STD CONDUCTOR TERMINATION FIGURES ARE PER
2 DIMENSIONS ARE IN INCHES AND TWO PLACE DECIMALS.

MANNED SPACECRAFT CENTER HOUSTON, TEXAS | SIZE A | 1900993
SCALE-NONE | REV LTR D | SHEET 11 OF 13

MIL 2085 - 4-63 WIR

GIW CABLE W-48 + 1900993

CONDUCTOR INDIVIDUAL LENGTH NUMBER	ITEM NO.	2	FROM CUT WIRE OR SHIELD STRIP WIRE OR JACKET CIRCUIT POINT	2	T I N	2	TERMINATION SPEC 1 ITEM NO.				NO.	TO CUT WIRE OR SHIELD STRIP WIRE OR JACKET CIRCUIT POINT	2	T I N	2	TERMINATION SPEC 1 ITEM NO.				NO.
							A 14													
A 22A	4		SHLD A22		37N							E3		37N						
A 22W			P1-PP		22N		22					P2- 25		22N		16				
A 23	4		P1-B		22N		22					E1		37N						
A 24	4		E1		37N							E2		37N						
A 25	4		E2		37N							E3		37N						

1 THE STD CONDUCTOR TERMINATION FIGURES ARE PER
2 DIMENSIONS ARE IN INCHES AND TWO PLACE DECIMALS.

MANNED SPACECRAFT CENTER HOUSTON, TEXAS | SIZE A | 1900993
SCALE-NONE | REV LTR + | SHEET 12 OF 13

MIL 2085 - 4-63 WIR

REVISIONS					
SYM	ZONE	DESCRIPTION	CHG NO.	DATE	APPD.
		SEE SHEET 1 FOR REVISION RECORD			

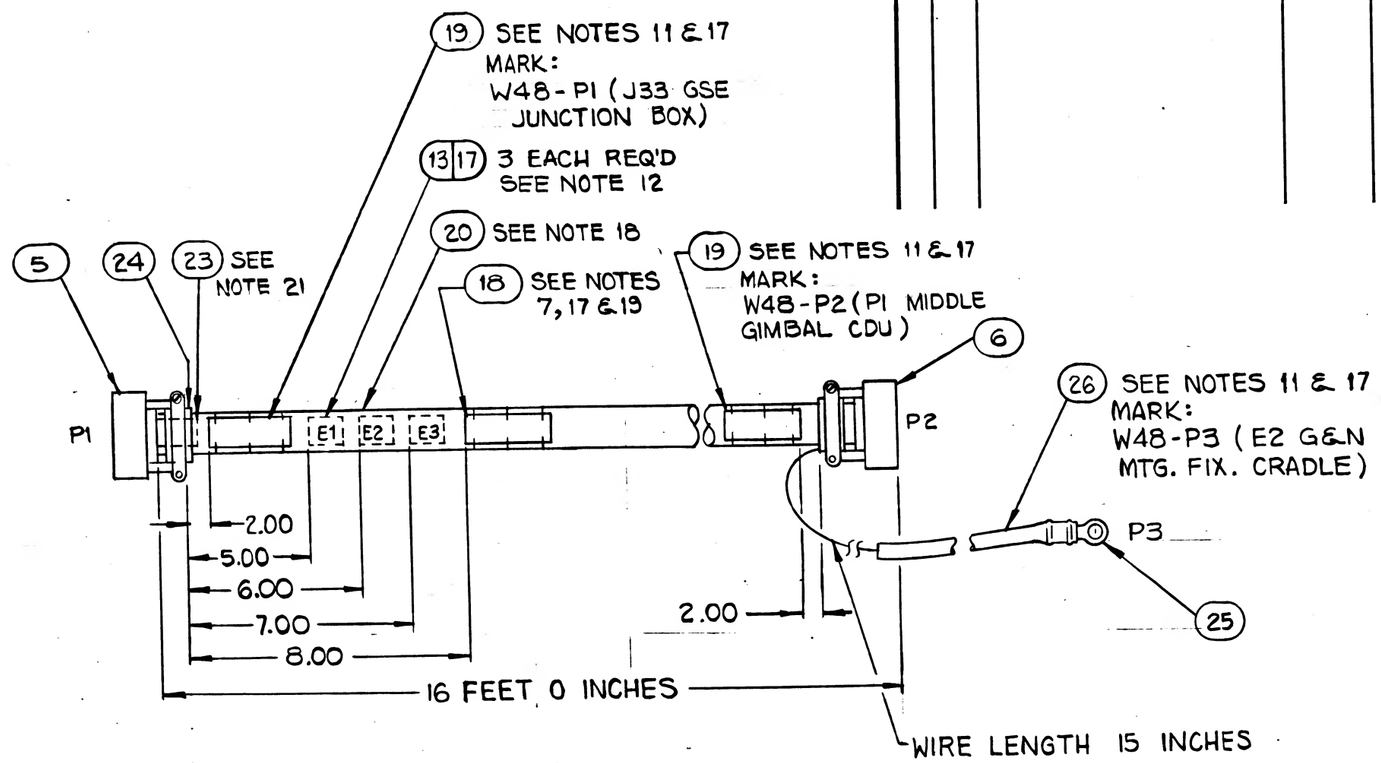

LOCATION TOLERANCE (EXCEPT LENTH): ±.50

NEXT ASSY	USED ON
APPLICATION	

UNLESS OTHERWISE SPECIFIED
DIMENSIONS ARE IN INCHES
TOLERANCES ON

FRACTIONS	DECIMALS	ANGLES
+ —	+ —	+ —
− —	− —	− —

DO NOT SCALE THIS DRAWING

MATERIAL

CONTRACT

AC SPARK PLUG DIVISION, GMC
MILWAUKEE, WISCONSIN

ACSP PN

DRAWN ORZEL DATE 11 NOV 63
CHECKED M. MANNING 20 NOV 63
APPROVAL N. ABRAHAM 20 NOV 63
APPROVAL

NASA APPROVAL

MIT APPROVAL

MANNED SPACECRAFT CENTER
HOUSTON, TEXAS

CABLE, INTERCONNECT W48
ISS, OSS TESTING

CODE IDENT NO.	SIZE	
	C	1900993
SCALE NONE		SHEET 13 OF 13

MIL 1077C-P

1900993

PENNANT NOTE	GENERAL NOTES
1	SEE CONDUCTOR CHART, PENNANT NOTE 1.
2	SEE CONDUCTOR CHART, PENNANT NOTE 2.
3	INTERPRET DRAWING IN ACCORDANCE WITH STANDARDS PRESCRIBED BY MIL-D-70327.
4	MARK CONDUCTOR IDENTIFICATION ON SINGLE CONDUCTORS PER ND1002019 OMITTING ALL SUFFIX LETTERS EXCEPT A AND B.
5	SPACING OF CONDUCTOR IDENTIFICATION SHALL BE EVERY 15 INCHES MAX. AND AT EACH TERMINATION.
6	SPIRALLING OF THE MARKING IS ALLOWED.
7	IDENTIFY USING DRAWING NO. AND REVISION LETTER PER MIL-STD-130 (ES-267). .12 INCH HIGH CHARACTERS WHITE.
8	Y OR N IN TINNED COLUMN INDICATES YES OR NO.
9	A LETTER WITH AN ASTERISK SUFFIX, INDICATES A LOWER CASE LETTER.
10	VENDOR ITEM - SEE SPECIFICATION CONTROL DRAWING.
11	MARK IDENTIFICATION BAND WITH REFERENCE DESIGNATION AS NOTED .12 INCH HIGH COLOR WHITE, HOT IMPRESSION STAMPING PER ND1002019. CENTRALIZE.
12	MARK SLEEVING WITH REFERENCE DESIGNATIONS AS SHOWN .12 INCH HIGH, COLOR BLACK PER ND1002019.
13	MARK SLEEVING OF MULTI-CONDUCTORS WITH THE CONDUCTOR NUMBER .12 INCH HIGH, COLOR BLACK, PER ND1002019 WHEN SLEEVING ITEM NUMBERS FOLLOW AN A OR T IN THE ACCESSORIES ITEM NUMBER FIELD.

MANNED SPACECRAFT CENTER HOUSTON, TEXAS	SIZE A	1900993
SCALE - NONE	REV LTR A	SHEET 2 OF 13

MIL 2084 4-63

PENNANT NOTE	GENERAL NOTES
14	A OR T PREFIX IN THE ACCESSORIES ITEM NUMBER COLUMN INDICATES THE READING POSITION AWAY FROM TERMINATION OR TOWARD TERMINATION RESPECTIVELY, OF THE WIRE MARKER SLEEVE.
15	THE SUFFIX LETTER OF A CONDUCTOR IDENTIFICATION NUMBER INDICATES CONDUCTOR SHIELDING, COLOR, OR MARKING. A - FROM END SHIELD L - WHITE WITH BLUE TRACER R - WHITE WITH RED TRACER Y - WHITE WITH YELLOW TRACER
16	ASSEMBLE CONTACTS IN ALL CONNECTOR GROMMET HOLES
17	SECURE TO CABLE USING ITEM 21, MARKING TO READ AWAY FROM CONNECTOR
18	SEAL ZIPPER TUBING PER ND1002153.
19	SERIALIZE PER ND1002023
20	THIS ITEM FURNISHED WITH ITEM 5
21	ITEM 23 SHALL BE SHORTENED WHEN NECESSARY TO AVOID INTERFERENCE WITH FERRULES AND MAY BE CUT LENGTHWISE ON ONE SIDE. SELECT ONE OR MORE OF ITEM 23 AS REQUIRED TO FIT.
22	SEE NOTES 10 AND 16

MANNED SPACECRAFT CENTER HOUSTON, TEXAS	SIZE A	1900993
SCALE - NONE	REV LTR A	SHEET 3 OF 13

MIL 2084 4-63

PENNANT NOTE	GENERAL NOTES

TOLERANCE CHART, UNLESS OTHERWISE SPECIFIED ---

APPLICABLE LENGTH FOR WIRE OR CABLE, STRIP WIRE, STRIP JACKET, CUT WIRE OR CUT SHIELD.	TOLERANCE				
	WIRE OR CABLE	STRIP WIRE	STRIP JACKET	CUT WIRE	CUT SHIELD
UNDER 1 INCH	+ .06-.00	+.03-.00	+.06-.06	+.06-.06	+.06-.06
1 INCH TO 6 INCHES	+ .50-.00	+.06-.00	+.25-.25	+.25-.25	+.25-.25
6 INCHES TO 6 FEET	+1.00-.00		+.50-.50	+.50-.50	+.50-.50
OVER 6 FEET	+2.00-.00				

MANNED SPACECRAFT CENTER HOUSTON, TEXAS	SIZE A	1900993
SCALE - NONE	REV LTR A	SHEET 4 OF 13

MIL 2084 4-63

APPLICATION		REVISIONS			
NEXT ASSY	USED ON	SYM	DESCRIPTION	DATE	APPROVAL
1900388	1900005-011	A	CHANGE IN ACCORDANCE WITH CM-193773	12 FEB 63	
		B	CHANGE IN ACCORDANCE WITH CM 195644 TDR2 09101	24 MAR 68	
		C	CHANGE IN ACCORDANCE WITH CM-196134 TDR2 09102	14 APR 64	J J J
		D	CHANGE IN ACCORDANCE WITH CM 197542 TDRR 10688 REVISED CUSTOMER DATA 12-64	27 MAY 64	R.B.
		E	CHANGE IN ACCORDANCE WITH CM 199020 TDRR 12271	30 JUL 64	JWP

M

FOR INFORMATION ONLY

CLASS B RELEASE TDR No. 05663 DATE 1/7/64

REV SHEET														
REV STATUS			E	A	A	D	+	E	+	D	+	E		
OF SHEETS	SHEET		1	2	3	4	5	6	7	8	9	10	11	12	13

Charleston 20 Jul 63

AC SPARK PLUG DIVISION, GMC
MILWAUKEE, WISCONSIN

MANNED SPACECRAFT CENTER
HOUSTON, TEXAS

ACSP PN

CABLE, INTERCONNECT W48
ISS, DSS TESTING

DRAWN — DATE 11 Nov 63
CHECKED — DATE 11 NOV 63
APPROVAL — DATE 11 NOV 63
APPROVAL — DATE 11 Nov 63

NASA APPROVAL	CODE IDENT NO.	SIZE	1900993	REV
MIT APPROVAL		A		E
CONTRACT NAS 9-497	SCALE			SHEET 1 OF 13

INCHES 0 1 2

LIST OF MATERIALS

PENNANT NOTE	ITEM	QTY	PART NO	DESCRIPTION
10	17	3	1016006-002	SPLICE REDUCER
10	18	1	1016128-011	BAND, IDENTIFICATION
10	19	2	1016128-041	BAND, IDENTIFICATION
	20	1	1900993-005	ZIPPER TUBING ND1002155, TYPE 1, PLASTIC, FLEXIBLE 1.00 DIA. 16 FT. TOTAL LENGTH.
	21	AR	MIL-T-713	LACING TAPE, TYPE P, CLASS 2 BLACK (ES-2732)
20	22			CONNECTOR CONTACTS, PIN
21	23			1897147-106, 108, 112, CABLE CLAMP SLEEVE
10	24	1	1016282-024	RUBBER GROMMET
10	25	1	1015902-046	TERMINAL LUG
	26	1	1900903-006	TUBING, MODIFIED POLYVINYL CHLORIDE FLEXIBLE, SHRINK-FIT PER 1016175-006 6 INCH TOTAL LENGTH

MANNED SPACECRAFT CENTER HOUSTON, TEXAS | SIZE A | 1900993
SCALE-NONE | REV LTR D | SHEET 6 OF 13

MIL 2084 4-63

LIST OF MATERIALS

PENNANT NOTE	ITEM	QTY	PART NO	DESCRIPTION
	1	1	1900993-001	WIRE ND1002181 TYPE 2 CLASS 4 WHT JAKT 22AWG WHT/BLU, WHT/RED - 176 FT. TOTAL LENGTH.
	2	1	1900993-002	WIRE ND1002181 TYPE 1 CLASS 4 WHT JAKT 22AWG WHT. 64 FT. TOTAL LENGTH
	3	1	1900993-003	WIRE ND1002181 TYPE 3, CLASS 4 WHT JAKT 22AWG WHT/RED, WHT/BLU, WHT/YEL 48 FT. TOTAL LENGTH.
	4	1	1900993-004	WIRE ND1002181 TYPE 1, CLASS 1, 22AWG, WHT 75 FT. TOTAL LENGTH.
16	5	1	MS3126F-24-61P (1897047-610) CONNECTOR-PLUG	
1 22	6	1	1010411-002	CONNECTOR
10	7	11	1000243-008	FERRULE, ELEC. COND
10	8	11	1000242-007	FERRULE, ELEC. COND
10	9	3	1000243-011	FERRULE, ELEC. COND
10	10	3	1000242-011	FERRULE, ELEC. COND
10	11	4	1000243-003	FERRULE, ELEC. COND
10	12	4	1000242-002	FERRULE, ELEC. COND
10	13	3	1010490-250	INSULATION, SLEEVING, ELECT.
10	14	32	1010490-198	INSULATION, SLEEVING, ELECT.
10	15	4	1010490-200	INSULATION, SLEEVING, ELECT.
10	16	108	1010464-002	CONNECTOR, CONTACTS, SOCKET

MANNED SPACECRAFT CENTER HOUSTON, TEXAS | SIZE A | 1900993
SCALE-NONE | REV LTR A | SHEET 5 OF 13

MIL 2084 4-63

CONDUCTOR NUMBER	INDIVIDUAL LENGTH ITEM NO.	2		FROM CUT WIRE OR SHIELD STRIP WIRE OR JACKET CIRCUIT POINT	2	T I N	2	TERMINATION SPEC. ITEM NO.	1	NO.	TO CUT WIRE OR SHIELD STRIP WIRE OR JACKET CIRCUIT POINT	2	T I N	2	TERMINATION SPEC ITEM NO.	1	NO.
A 1	4			P1-A*	22	N		22			P2- 30	22	N		16		
A 2	2				230		200	12 11	5			230		200	A 15	7A	
								A 14									
A 2A	4			SHLD A2	37	N					E1	37	N				
A 2W				P1-B*	22	N		22			P2- 12	22	N		16		
A 3	1				230		200	8 7	5			230		200	A 14	7A	
								A 14									
A 3A	4			SHLD A3	37	N					E1	37	N				
A 3L				P1-D*	22	N		22			P2- 14	22	N		16		
A 3R				P1-C*	22	N		22			P2- 1	22	N		16		
A 4	4			P1-DD	22	N		22			P2- 15	22	N		16		
A 5	1				230		200	8 7	5			230		200	A 14	7A	
								A 14									
A 5A	4			SHLD A5	37	N					E1	37	N				
A 5L				P1-F*	22	N		22			P2- 57	22	N		16		
A 5R				P1-E*	22	N		22			P2- 67	22	N		16		
A 6	1				230		200	8 7	5			230		200	A 14	7A	
								A 14									

1 THE STD CONDUCTOR TERMINATION FIGURES ARE PER
2 DIMENSIONS ARE IN INCHES AND TWO PLACE DECIMALS.

MANNED SPACECRAFT CENTER HOUSTON, TEXAS | SIZE A | 1900993
SCALE-NONE | REV LTR + | SHEET 7 OF 13

MIL 2085 - 4-63 WIR

CONDUCTOR NUMBER	INDIVIDUAL LENGTH ITEM NO.	2		FROM CUT WIRE OR SHIELD STRIP WIRE OR JACKET CIRCUIT POINT	2	T I N	2	TERMINATION SPEC. ITEM NO.	1	NO.	TO CUT WIRE OR SHIELD STRIP WIRE OR JACKET CIRCUIT POINT	2	T I N	2	TERMINATION SPEC ITEM NO.	1	NO.
A 6A	4			SHLD A6	37	N					E1	37	N				
A 6L				P1-H*	22	N		22			P2- 45	22	N		16		
A 6R				P1-G*	22	N		22			P2- 35	22	N		16		
A 7	2				280		250	12 11	5			280		250	A 15	7A	
								A 14									
A 7A	4			SHLD A7	37	N					E1	37	N				
A 7W				P1-I*	22	N		22			P2- 34	22	N		16		
A 8	1				280		250	8 7	5			280		250	A 14	7A	
								A 14									
A 8A	4			SHLD A8	37	N					E1	37					
A 8L				P1-K*	22	N		22			P2- 6	22	N		16		
A 8R				P1-J*	22	N		22			P2- 20	22	N		16		
A 9	1				280		250	8 7	5			280		250	A 14	7A	
								A 14									
A 9A	4			SHLD A9	37	N					E2	37	N				
A 9L				P1-N*	22	N		22			P2- 7	22	N		16		
A 9R				P1-M*	22	N		22			P2- 21	22	N		16		
A 10	1				280		250	8 7	5			280		250	A 14	7A	

1 THE STD CONDUCTOR TERMINATION FIGURES ARE PER
2 DIMENSIONS ARE IN INCHES AND TWO PLACE DECIMALS.

MANNED SPACECRAFT CENTER HOUSTON, TEXAS | SIZE A | 1900993
SCALE-NONE | REV LTR + | SHEET 8 OF 13

MIL 2085 - 4-63 WIR

INCHES
0 1 2

GIW CABLE W-48 + 1900993

CONDUCTOR NUMBER	INDIVIDUAL LENGTH ITEM NO.	2		FROM CUT WIRE OR SHIELD STRIP WIRE OR JACKET CIRCUIT POINT	2	TIN	2	TERMINATION SPEC. 1 ITEM NO.			NO.	TO CUT WIRE OR SHIELD STRIP WIRE OR JACKET CIRCUIT POINT	2	TIN	2	TERMINATION SPEC 1 ITEM NO.			NO.
A 13R				P1-V*	22N			22				P2-107	22N			16			
A 13Y				P1-X*	22N			22				P2- 94	22N			16			
A 14	1				380		300	8	7	5			380		300	A 14		7A	
								A 14											
A 14A	4			SHLD A14	37N							E2	37N						
A 14L				P1-Z*	22N			22				P2- 50	22N			16			
A 14R				P1-Y*	22N			22				P2- 60	22N			16			
A 15	1				380		350	8	7	5			380		350	A 14		7A	
								A 14											
A 15A	4			SHLD A15	37N							E3	37N						
A 15L				P1-CC	22N			22				P2- 2	22N			16			
A 15R				P1-BB	22N			22				P2- 3	22N			16			
A 16	4			P1-AA	22N			22				P2- 16	22N			16			
A 17	3				380		350	10	9	5			380		350	A 14		7A	
								A 14											
A 17A	4			SHLD A17	37N							E3	37N						
A 17L				P1-FF	22N			22				P2-105	22N			16			
A 17R				P1-EE	22N			22				P2- 92	22N			16			

1 THE STD CONDUCTOR TERMINATION FIGURES ARE PER
2 DIMENSIONS ARE IN INCHES AND TWO PLACE DECIMALS.

MANNED SPACECRAFT CENTER HOUSTON, TEXAS | SIZE A | 1900993

SCALE-NONE | REV LTR + | SHEET 10 OF 13

MIL 2088 - 4-63 WIR

GIW CABLE W-48 B 1900993

CONDUCTOR NUMBER	INDIVIDUAL LENGTH ITEM NO.	2		FROM CUT WIRE OR SHIELD STRIP WIRE OR JACKET CIRCUIT POINT	2	TIN	2	TERMINATION SPEC. 1 ITEM NO.			NO.	TO CUT WIRE OR SHIELD STRIP WIRE OR JACKET CIRCUIT POINT	2	TIN	2	TERMINATION SPEC 1 ITEM NO.			NO.
								A 14											
A 10A	4			SHLD A10	37N							E2	37N						
A 10L				P1-Q*	22N			22				P2- 90	22N			16			
A 10R				P1-P*	22N			22				P2-104	22N			16			
A 11	1				330		300	8	7	5			330		300	A 14		7A	
								A 14											
A 11A	4			SHLD A11	37N							E2	37N						
A 11L				P1-S*	22N			22				P2- 86	22N			16			
A 11R				P1-R*	22N			22				P2-100	22N			16			
A 12	1				330		300	8	7	5			330		300	A 14		7A	
								A 14											
A 12A	4			SHLD A12	37N							E2	37N						
A 12L				P1-U*	22N			22				P2- 87	22N			16			
A 12R				P1-T*	22N			22				P2-101	22N			16			
A 13	3				330		300	10	9	5			330		300	A 14		7A	
								A 14											
A 13A	4			SHLD A13	37N							P1-C	22N			22			
A 13L				P1-W*	22N			22				P2-108	22N			16			

1 THE STD CONDUCTOR TERMINATION FIGURES ARE PER
2 DIMENSIONS ARE IN INCHES AND TWO PLACE DECIMALS.

MANNED SPACECRAFT CENTER HOUSTON, TEXAS | SIZE A | 1900993

SCALE-NONE | REV LTR E | SHEET 9 OF 13

MIL 2088 - 4-63 WIR

GIW CABLE W-48 D 1900993

CONDUCTOR NUMBER	INDIVIDUAL LENGTH ITEM NO.	2		FROM CUT WIRE OR SHIELD STRIP WIRE OR JACKET CIRCUIT POINT	2	TIN	2	TERMINATION SPEC. 1 ITEM NO.			NO.	TO CUT WIRE OR SHIELD STRIP WIRE OR JACKET CIRCUIT POINT	2	TIN	2	TERMINATION SPEC 1 ITEM NO.			NO.
A 17Y				P1-GG	22N			22				P2-106	22N			16			
A 18	3				380		350	10	9	5			380		350	A 14		7A	
								A 14											
A 18A	4			SHLD A18	37N							E3	37N						
A 18L				P1-JJ	22N			22				P2- 31	22N			16			
A 18R				P1-HH	22N			22				P2- 32	22N			16			
A 18Y				P1-KK	22N			22				P2- 43	22N			16			
A 19	1				380		350	8	7	5			380		350	A 14		7A	
								A 14											
A 19A	4			SHLD A19	37N							E3	37N						
A 19L				P1-MM	22N			22				P2- 29	22N			16			
A 19R				P1-LL	22N			22				P2- 28	22N			16			
A 20	4			P3- 1	25N			25				P2- 41	22N			16			
A 21	2				430		400	12	11				430		400	A 15		7A	
								A 14											
A 21A	4			SHLD A21	37N							E3	37N						
A 21W				P1-NN	22N			22				P2- 11	22N			16			
A 22	2				430		400	12	11				430		400	A 15		7A	

1 THE STD CONDUCTOR TERMINATION FIGURES ARE PER
2 DIMENSIONS ARE IN INCHES AND TWO PLACE DECIMALS.

MANNED SPACECRAFT CENTER HOUSTON, TEXAS | SIZE A | 1900993

SCALE-NONE | REV LTR D | SHEET 11 OF 13

MIL 2088 - 4-63 WIR

GIW CABLE W-48 + 1900993

CONDUCTOR NUMBER	INDIVIDUAL LENGTH ITEM NO.	2		FROM CUT WIRE OR SHIELD STRIP WIRE OR JACKET CIRCUIT POINT	2	TIN	2	TERMINATION SPEC. 1 ITEM NO.			NO.	TO CUT WIRE OR SHIELD STRIP WIRE OR JACKET CIRCUIT POINT	2	TIN	2	TERMINATION SPEC 1 ITEM NO.			NO.
								A 14											
A 22A	4			SHLD A22	37N							E3	37N						
A 22W				P1-PP	22N			22				P2- 25	22N			16			
A 23	4			P1-B	22N			22				E1	37N						
A 24	4			E1	37N							E2	37N						
A 25	4			E2	37N							E3	37N						

1 THE STD CONDUCTOR TERMINATION FIGURES ARE PER
2 DIMENSIONS ARE IN INCHES AND TWO PLACE DECIMALS.

MANNED SPACECRAFT CENTER HOUSTON, TEXAS | SIZE A | 1900993

SCALE-NONE | REV LTR + | SHEET 12 OF 13

MIL 2088 - 4-63 WIR

INCHES

E660061

REVISIONS					
SYM	ZONE	DESCRIPTION	CHG NO.	DATE	APPD.
		SEE SHEET 1 FOR REVISION RECORD			

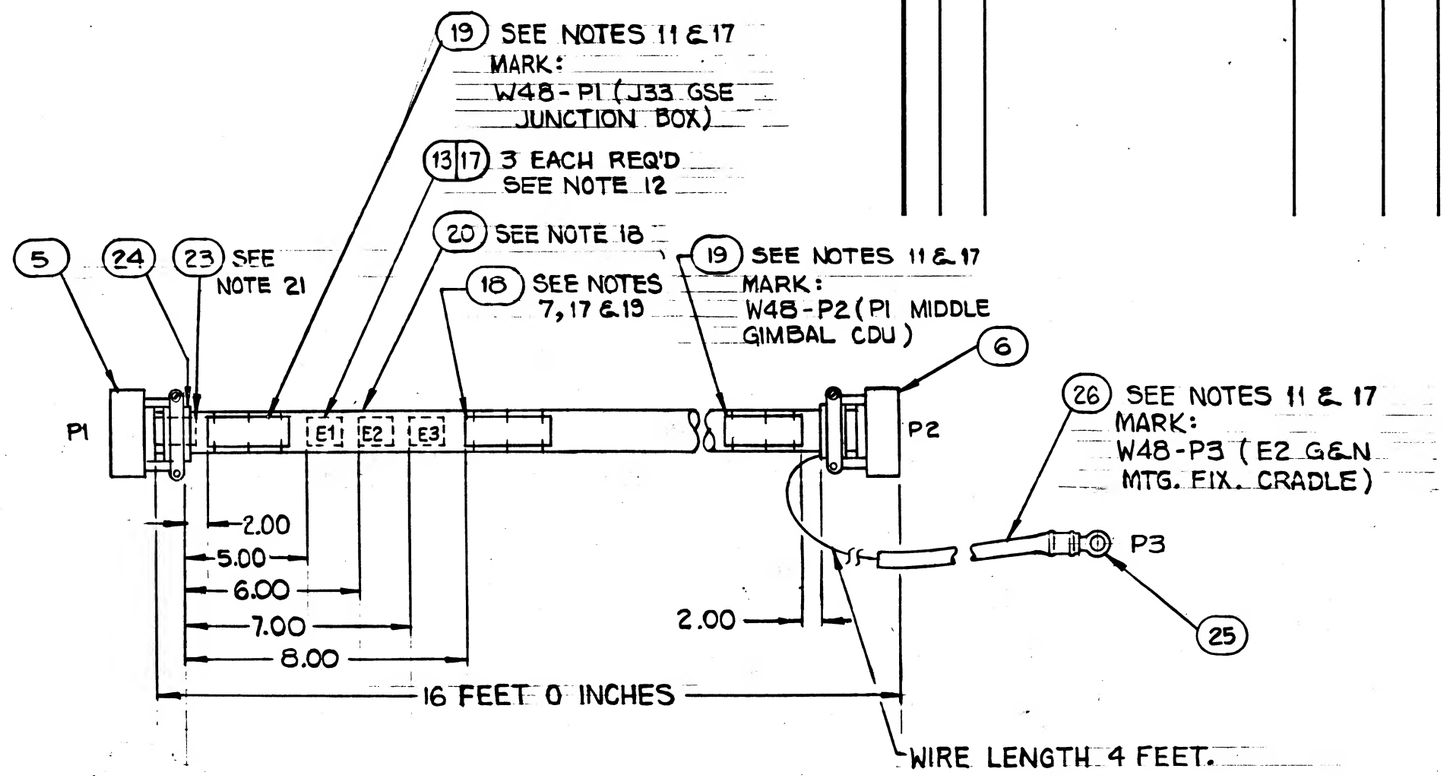

LOCATION TOLERANCE
(EXCEPT LENTH): ±.50

NEXT ASSY	USED ON
APPLICATION	

UNLESS OTHERWISE SPECIFIED
DIMENSIONS ARE IN INCHES
TOLERANCES ON
FRACTIONS ± — DECIMALS ± — ANGLES ± —
DO NOT SCALE THIS DRAWING
MATERIAL —
CONTRACT

AC SPARK PLUG DIVISION, GMC
MILWAUKEE, WISCONSIN
ACSP PN
DRAWN ORZEL DATE 11 NOV 63
CHECKED M. MANNING 20 NOV 63
APPROVAL N. ABRAHAM 20 NOV 63
APPROVAL 9/14/64
NASA APPROVAL 9/15/64
MIT APPROVAL 9/15/64

MANNED
SPACECRAFT CENTER
HOUSTON, TEXAS

CABLE, INTERCONNECT W48
ISS, OSS TESTING
1900993

CODE IDENT NO.	SIZE	
	C	1900993
SCALE NONE		SHEET 13 OF 13

MIL 1077C-P

INCHES
0 1 2
PHOTOGRAPHIC SCALE ONLY

GENERAL NOTES

NOTES

1 SEE CONDUCTOR CHART
2 SEE CONDUCTOR CHART
3 INTERPRET DRAWING IN ACCORDANCE WITH STANDARDS PRESCRIBED BY MIL-D-70327.
4 MARK CONDUCTOR IDENTIFICATION ON SINGLE CONDUCTORS PER ND1002019 OMITTING ALL SUFFIX LETTERS EXCEPT A AND B.
5 SPACING OF CONDUCTOR IDENTIFICATION SHALL BE EVERY 15 INCHES MAX AND AT EACH TERMINATION.
6 SPIRALLING OF THE MARKING IS ALLOWED.
7 IDENTIFY USING DRAWING NO. AND REVISION LETTER PER MIL-STD-130 (ES-267). .12 INCH HIGH CHARACTERS BLACK.
8 Y OR N IN TINNED COLUMN INDICATES YES OR NO.
9 A LETTER WITH AN ASTERISK SUFFIX, INDICATES A LOWER CASE LETTER.
10 VENDOR ITEM - SEE SPECIFICATION CONTROL DRAWING.
11 MARK IDENTIFICATION BAND WITH REFERENCE DESIGNATION AS NOTED .12 INCH HIGH COLOR BLACK, HOT IMPRESSION STAMPING PER ND1002019. CENTRALIZE.

MANNED SPACECRAFT CENTER HOUSTON, TEXAS	SIZE A	1900993	
SCALE - NONE	REV LTR +		SHEET 2 OF 13

MIL 2084 4-63

GENERAL NOTES

NOTES

12 MARK SLEEVING WITH REFERENCE DESIGNATIONS AS SHOWN .12 INCH HIGH, COLOR BLACK PER ND1002019.
13 MARK SLEEVING OF MULTI-CONDUCTORS WITH THE CONDUCTOR NUMBER .12 INCH HIGH, COLOR BLACK, PER ND1002019 WHEN SLEEVING ITEM NUMBERS FOLLOW AN A OR T IN THE ACCESSORIES ITEM NUMBER FIELD.
14 A OR T PREFIX IN THE ACCESSORIES ITEM NUMBER COLUMN INDICATES THE READING POSITION AWAY FROM TERMINATION OR TOWARD TERMINATION RESPECTIVELY, OF THE WIRE MARKER SLEEVE.
15 THE SUFFIX LETTER OF A CONDUCTOR IDENTIFICATION NUMBER INDICATES CONDUCTOR SHIELDING, COLOR, OR MARKING.
   A - FROM END SHIELD
   L - WHITE WITH BLUE TRACER
   R - WHITE WITH RED TRACER
   Y - WHITE WITH YELLOW TRACER
16 ASSEMBLE CONTACTS IN ALL CONNECTOR GROMMET HOLES
17 SECURE TO CABLE USING ITEM 21, MARKING TO READ AWAY FROM CONNECTOR
18 SEAL ZIPPER TUBING PER ND 1002153
19 SERIALIZE PER ND 1002023
20 THIS ITEM FURNISHED WITH ITEM 5

MANNED SPACECRAFT CENTER HOUSTON, TEXAS	SIZE A	1900993	
SCALE - NONE	REV LTR +		SHEET 3 OF 13

MIL 2084 4-63

FOR INFORMATION ONLY

CLASS B RELEASE TDR No. 05663 DATE 1/7/64

APPLICATION			REVISIONS		
NEXT ASSY	USED ON	SYM	DESCRIPTION	DATE	APPROVAL
1900005-011	1900005-011				

REV	+	+	+	+	+	+	+	+	+	+	+	+
SHEET	1	2	3	4	5	6	7	8	9	10	11	12/13
REV STATUS												
OF SHEETS												

Chandler 20 Oct 63

AC SPARK PLUG DIVISION, GMC
MILWAUKEE, WISCONSIN

ACSP PN

DRAWN Cassell 11 Nov 63
CHECKED Chandler 20 Nov 63
APPROVAL Y. Shapiro
APPROVAL L. Dickman

MANNED SPACECRAFT CENTER HOUSTON, TEXAS

CABLE, INTERCONNECT W48
ISS, OSS TESTING

CODE IDENT NO. | SIZE A | 1900993 | REV +

NASA APPROVAL
MIT APPROVAL
CONTRACT NAS 9-497
SCALE
SHEET 1 OF 13

GENERAL NOTES

TOLERANCE CHART, UNLESS OTHERWISE SPECIFIED ---

APPLICABLE LENGTH FOR WIRE OR CABLE, STRIP WIRE, STRIP JACKET, CUT WIRE OR CUT SHIELD	TOLERANCE				
	WIRE OR CABLE	STRIP WIRE	STRIP JACKET	CUT WIRE	CUT SHIELD
UNDER 1 INCH	+ .06-.00	+.03-.00	+.06-.06	+.06-.06	+.06-.06
1 INCH TO 6 INCHES	+ .50-.00	+.06-.00	+.25-.25	+.25-.25	+.25-.25
6 INCHES TO 6 FEET	+1.00-.00		+.50-.50	+.50-.50	+.50-.50
OVER 6 FEET	+2.00-.00				

MANNED SPACECRAFT CENTER HOUSTON, TEXAS	SIZE A	1900993	
SCALE - NONE	REV LTR +		SHEET 4 OF 13

MIL 2084 4-63

INCHES 0 1 2
PHOTOGRAPHIC SCALE ONLY

LIST OF MATERIAL

SEE NOTE	ITEM	REQ'D	PART NUMBER	DESCRIPTION
10	17	3	1016006-002	SPLICE REDUCER
10	18	1	1016128-011	BAND, IDENTIFICATION
10	19	2	1016128-041	BAND, IDENTIFICATION
	20	1	1900993-005	ZIPPER TUBING ND 1002155, TYPE 1, PLASTIC, FLEXIBLE 5/8 DIA. 16 FT TOTAL LENGTH.
	21	AR	MIL-T-713	LACING TAPE, TYPE P, CLASS 2 BLACK (ES 2732)
20	22	-	-	CONNECTOR CONTACTS, PIN

MANNED SPACECRAFT CENTER HOUSTON, TEXAS | SIZE A | 1900993
SCALE-NONE | REV LTR + | SHEET 6 OF 13

MIL 2084 4-63

6

CONDUCTOR INDIVIDUAL LENGTH NUMBER	ITEM NO. (2)	FROM CUT WIRE OR SHIELD STRIP WIRE OR JACKET CIRCUIT POINT (2)	TIN (2)	TERMINATION SPEC. (1) ITEM NO.	NO.	TO CUT WIRE OR SHIELD STRIP WIRE OR JACKET CIRCUIT POINT (2)	TIN (2)	TERMINATION SPEC (1) ITEM NO.	NO.
A 1	4	P1-A*	22N	22		P2- 30	22N	16	
A 2	2		230 200	12 11	5		230 200	A 15	7A
				A 14					
A 2A	4	SHLD A2	37N			E1	37N		
A 2W		P1-B*	22N	22		P2- 12	22N	16	
A 3	1		230 200	8 7	5		230 200	A 14	7A
				A 14					
A 3A	4	SHLD A3	37N			E1	37N		
A 3L		P1-D*	22N	22		P2- 14	22N	16	
A 3R		P1-C*	22N	22		P2- 1	22N	16	
A 4	4	P1-DD	22N	22		P2- 15	22N	16	
A 5	1		230 200	8 7	5		230 200	A 14	7A
				A 14					
A 5A	4	SHLD A5	37N			E1	37N		
A 5L		P1-F*	22N	22		P2- 57	22N	16	
A 5R		P1-E*	22N	22		P2- 67	22N	16	
A 6	1		230 200	8 7	5		230 200	A 14	7A
				A 14					

(1) THE STD CONDUCTOR TERMINATION FIGURES ARE PER
(2) DIMENSIONS ARE IN INCHES AND TWO PLACE DECIMALS.

MANNED SPACECRAFT CENTER HOUSTON, TEXAS | SIZE A | 1900993
SCALE-NONE | REV LTR + | SHEET 7 OF 13

MIL 2085 - 4-63 WIR

LIST OF MATERIAL

SEE NOTE	ITEM	REQ'D	PART NUMBER	DESCRIPTION
	1	1	1900993-001	WIRE ND 1002181 TYPE 2 CLASS 4 WHT JAKT 22 AWG WHT/BLU, WHT/RED - 176 FT. TOTAL LENGTH.
	2	1	-002	WIRE ND 1002181 TYPE 1 CLASS 4 WHT JAKT 22 AWG WHT, 64 FT TOTAL LENGTH
	3	1	-003	WIRE ND 1002181 TYPE 3, CLASS 4 WHT JAKT 22 AWG WHT/RED, WHT/BLU, WHT/YEL 48 FT TOTAL LENGTH.
	4	1	-004	WIRE ND 1002181 TYPE 1, CLASS 1, 22 AWG, WHT 75 FT TOTAL LENGTH.
16	5	1	MS3126F-24-61P	(1897047-610) CONNECTOR - PLUG
16,10	6	1	1010411-2	CONNECTOR
10	7	11	1000243-008	FERRULE, ELEC. COND
10	8	11	1000242-007	FERRULE, ELEC. COND
10	9	3	1000243-011	FERRULE, ELEC. COND
10	10	3	1000242-011	FERRULE, ELEC. COND
10	11	4	1000243-003	FERRULE, ELEC. COND
10	12	4	1000242-002	FERRULE, ELEC. COND
10	13	3	1010490-250	INSULATION, SLEEVING, ELECT
10	14	32	1010490-198	INSULATION, SLEEVING, ELECT
10	15	4	1010490-200	INSULATION, SLEEVING, ELECT
10	16	108	1010464-2	CONNECTOR, CONTACTS, SOCKET

MANNED SPACECRAFT CENTER HOUSTON, TEXAS | SIZE A | 1900993
SCALE-NONE | REV LTR + | SHEET 5 OF 13

MIL 2084 4-63

5

CONDUCTOR INDIVIDUAL LENGTH NUMBER	ITEM NO. (2)	FROM CUT WIRE OR SHIELD STRIP WIRE OR JACKET CIRCUIT POINT (2)	TIN (2)	TERMINATION SPEC. (1) ITEM NO.	NO.	TO CUT WIRE OR SHIELD STRIP WIRE OR JACKET CIRCUIT POINT (2)	TIN (2)	TERMINATION SPEC (1) ITEM NO.	NO.
A 6A	4	SHLD A6	37N			E1	37N		
A 6L		P1-H*	22N	22		P2- 45	22N	16	
A 6R		P1-G*	22N	22		P2- 35	22N	16	
A 7	2		280 250	12 11	5		280 250	A 15	7A
				A 14					
A 7A	4	SHLD A7	37N			E1	37N		
A 7W		P1-I*	22N	22		P2- 34	22N	16	
A 8	1		280 250	8 7	5		280 250	A 14	7A
				A 14					
A 8A	4	SHLD A8	37N			E1	37		
A 8L		P1-K*	22N	22		P2- 6	22N	16	
A 8R		P1-J*	22N	22		P2- 20	22N	16	
A 9	1		280 250	8 7	5		280 250	A 14	7A
				A 14					
A 9A	4	SHLD A9	37N			E2	37N		
A 9L		P1-N*	22N	22		P2- 7	22N	16	
A 9R		P1-M*	22N	22		P2- 21	22N	16	
A 10	1		280 250	8 7	5		280 250	A 14	7A

(1) THE STD CONDUCTOR TERMINATION FIGURES ARE PER
(2) DIMENSIONS ARE IN INCHES AND TWO PLACE DECIMALS.

MANNED SPACECRAFT CENTER HOUSTON, TEXAS | SIZE A | 1900993
SCALE-NONE | REV LTR + | SHEET 8 OF 13

MIL 2085 - 4-63 WIR

INCHES 0 1 2
PHOTOGRAPHIC SCALE ONLY

GIW CABLE W-48 + 1900993

CONDUCTOR INDIVIDUAL LENGTH NUMBER	ITEM NO.	2	FROM CUT WIRE OR SHIELD STRIP WIRE OR JACKET CIRCUIT POINT	2	TIN	2	TERMINATION SPEC. 1 ITEM NO.			NO.	TO CUT WIRE OR SHIELD STRIP WIRE OR JACKET CIRCUIT POINT	2	TIN	2	TERMINATION SPEC 1 ITEM NO.			NO.
A 13R			P1-V*	22N			22				P2-107	22N			16			
A 13Y			P1-X*	22N			22				P2- 94	22N			16			
A 14	1			330		300	8	7	5			330		300	A 14		7A	
							A 14											
A 14A	4		SHLD A14	37N							E2	37N						
A 14L			P1-Z*	22N			22				P2- 50	22N			16			
A 14R			P1-Y*	22N			22				P2- 60	22N			16			
A 15	1			380		350	8	7	5			380		350	A 14		7A	
							A 14											
A 15A	4		SHLD A15	37N							E3	37N						
A 15L			P1-CC	22N			22				P2- 2	22N			16			
A 15R			P1-BB	22N			22				P2- 3	22N			16			
A 16	4		P1-AA	22N			22				P2- 16	22N			16			
A 17	3			380		350	10	9	5			380		350	A 14		7A	
							A 14											
A 17A	4		SHLD A17	37N							E3	37N						
A 17L			P1-FF	22N			22				P2-105	22N			16			
A 17R			P1-EE	22N			22				P2- 92	22N			16			

1 THE STD CONDUCTOR TERMINATION FIGURES ARE PER
2 DIMENSIONS ARE IN INCHES AND TWO PLACE DECIMALS.

MANNED SPACECRAFT CENTER HOUSTON, TEXAS | SIZE A | 1900993

SCALE - NONE | REV LTR + | SHEET 10 OF 13

MIL 2085 - 4-63 WIR

GIW CABLE W-48 + 1900993

CONDUCTOR INDIVIDUAL LENGTH NUMBER	ITEM NO.	2	FROM CUT WIRE OR SHIELD STRIP WIRE OR JACKET CIRCUIT POINT	2	TIN	2	TERMINATION SPEC. 1 ITEM NO.			NO.	TO CUT WIRE OR SHIELD STRIP WIRE OR JACKET CIRCUIT POINT	2	TIN	2	TERMINATION SPEC 1 ITEM NO.			NO.
A 17Y			P1-GG	22N			22				P2-106	22N			16			
A 18	3			380		350	10	9	5			380		350	A 14		7A	
							A 14											
A 18A	4		SHLD A18	37N							E3	37N						
A 18L			P1-JJ	22N			22				P2- 31	22N			16			
A 18R			P1-HH	22N			22				P2- 32	22N			16			
A 18Y			P1-KK	22N			22				P2- 43	22N			16			
A 19	1			380		350	8	7	5			380		350	A 14		7A	
							A 14											
A 19A	4		SHLD A19	37N							E3	37N						
A 19L			P1-MM	22N			22				P2- 29	22N			16			
A 19R			P1-LL	22N			22				P2- 28	22N			16			
A 20	4		P1-A	22N			22				P2- 41	22N			16			
A 21	2			430		400	12	11				430		400	A 15		7A	
							A 14											
A 21A	4		SHLD A21	37N							E3	37N						
A 21W			P1-NN	22N			22				P2- 11	22N			16			
A 22	2			430		400	12	11				430		400	A 15		7A	

1 THE STD CONDUCTOR TERMINATION FIGURES ARE PER
2 DIMENSIONS ARE IN INCHES AND TWO PLACE DECIMALS.

MANNED SPACECRAFT CENTER HOUSTON, TEXAS | SIZE A | 1900993

SCALE - NONE | REV LTR + | SHEET 11 OF 13

MIL 2085 - 4-63 WIR

GIW CABLE W-48 + 1900993

CONDUCTOR INDIVIDUAL LENGTH NUMBER	ITEM NO.	2	FROM CUT WIRE OR SHIELD STRIP WIRE OR JACKET CIRCUIT POINT	2	TIN	2	TERMINATION SPEC. 1 ITEM NO.			NO.	TO CUT WIRE OR SHIELD STRIP WIRE OR JACKET CIRCUIT POINT	2	TIN	2	TERMINATION SPEC 1 ITEM NO.			NO.
							A 14											
A 10A	4		SHLD A10	37N							E2	37N						
A 10L			P1-Q*	22N			22				P2- 90	22N			16			
A 10R			P1-P*	22N			22				P2-104	22N			16			
A 11	1			330		300	8	7	5			330		300	A 14		7A	
							A 14											
A 11A	4		SHLD A11	37N							E2	37N						
A 11L			P1-S*	22N			22				P2- 86	22N			16			
A 11R			P1-R*	22N			22				P2-100	22N			16			
A 12	1			330		300	8	7	5			330		300	A 14		7A	
							A 14											
A 12A	4		SHLD A12	37N							E2	37N						
A 12L			P1-U*	22N			22				P2- 87	22N			16			
A 12R			P1-T*	22N			22				P2-101	22N			16			
A 13	3			330		300	10	9	5			330		300	A 14		7A	
							A 14											
A 13A	4		SHLD A13	37N							E2	37N						
A 13L			P1-W*	22N			22				P2-108	22N			16			

1 THE STD CONDUCTOR TERMINATION FIGURES ARE PER
2 DIMENSIONS ARE IN INCHES AND TWO PLACE DECIMALS.

MANNED SPACECRAFT CENTER HOUSTON, TEXAS | SIZE A | 1900993

SCALE - NONE | REV LTR + | SHEET 9 OF 13

MIL 2085 - 4-63 WIR

GIW CABLE W-48 + 1900993

CONDUCTOR INDIVIDUAL LENGTH NUMBER	ITEM NO.	2	FROM CUT WIRE OR SHIELD STRIP WIRE OR JACKET CIRCUIT POINT	2	TIN	2	TERMINATION SPEC. 1 ITEM NO.			NO.	TO CUT WIRE OR SHIELD STRIP WIRE OR JACKET CIRCUIT POINT	2	TIN	2	TERMINATION SPEC 1 ITEM NO.			NO.
							A 14											
A 22A	4		SHLD A22	37N							E3	37N						
A 22W			P1-PP	22N			22				P2- 25	22N			16			
A 23	4		P1-B	22N			22				E1	37N						
A 24	4		E1	37N							E2	37N						
A 25	4		E2	37N							E3	37N						

1 THE STD CONDUCTOR TERMINATION FIGURES ARE PER
2 DIMENSIONS ARE IN INCHES AND TWO PLACE DECIMALS.

MANNED SPACECRAFT CENTER HOUSTON, TEXAS | SIZE A | 1900993

SCALE - NONE | REV LTR + | SHEET 12 OF 13

MIL 2085 - 4-63 WIR

INCHES 0 1 2
PHOTOGRAPHIC SCALE ONLY

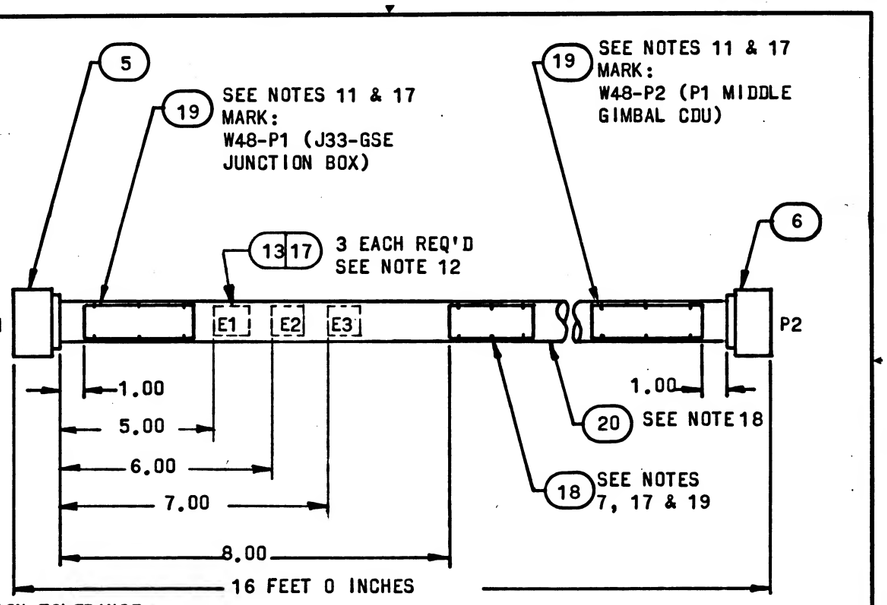

LOCATION TOLERANCE
(EXCEPT LENGTH):
+.50
-.50

MANNED SPACECRAFT CENTER HOUSTON, TEXAS	SIZE A	1900993
SCALE-NONE	REV LTR +	SHEET 13 OF 13

MIL 2084 4-65

PHOTOGRAPHIC SCALE ONLY
INCHES
0
1
2

APPLICATION		REVISIONS			
NEXT ASSY	USED ON	SYM	DESCRIPTION	DATE	APPROVAL
1901308	1900005-011	A	CHANGE IN ACCORDANCE WITH CM 193774 ~7/>7	17 FEB 64	RJF
		B	CHANGE IN ACCORDANCE WITH CM 195639 REVISED CUSTOMER DATA V 2-64	20 MAR 64	RWH MEM
		C	CHANGE IN ACCORDANCE WITH CM 196135 04176	2 APR '64	CJL MEM
		D	CHANGE IN ACCORDANCE WITH CM 197544 IDCR 10628 REVISED CUSTOMER DATA V2-64	28 MAY 64	R.B. MEM
		E	CHANGE IN ACCORDANCE WITH CM 197759 11373	23 JUN 64	J J J

FOR INFORMATION ONLY

CLASS B RELEASE TDR No. 05653 DATE 1/7/64

REV																							
SHEET																							
REV STATUS OF SHEETS	REV	B	C	C	A	A	D	+	+	+	B	D	E	D									
	SHEET	1	2	3	4	5	6	7	8	9	10	11	12	13									

AC SPARK PLUG DIVISION, GMC
MILWAUKEE, WISCONSIN

ACSP PN

DRAWN 11 NOV 63 DATE
CHECKED 20 NOV 63
APPROVAL 20 NOV 63
APPROVAL 11/14/63

NASA APPROVAL
MIT APPROVAL 7 Jan 64

CONTRACT NAS 9-497

MANNED
SPACECRAFT CENTER
HOUSTON, TEXAS

CABLE, INTERCONNECT W46
ISS, OSS TESTING

CODE IDENT NO.	SIZE		REV
	A	1900994	E

SCALE — SHEET 1 OF 13

PENNANT NOTE	GENERAL NOTES
1	SEE CONDUCTOR CHART. PENNANT NOTE 1.
2	SEE CONDUCTOR CHART. PENNANT NOTE 2.
3	INTERPRET DRAWING IN ACCORDANCE WITH STANDARDS PRESCRIBED BY MIL-D-70327.
4	MARK CONDUCTOR IDENTIFICATION ON SINGLE CONDUCTORS PER ND1002019 OMITTING ALL SUFFIX LETTERS EXCEPT A AND B.
5	SPACING OF CONDUCTOR IDENTIFICATION SHALL BE EVERY 15 INCHES MAX. AND AT EACH TERMINATION.
6	SPIRALLING OF THE MARKING IS ALLOWED.
7	IDENTIFY USING DRAWING NO. AND REVISION LETTER PER MIL-STD-130 (ES-267). .12 INCH HIGH CHARACTERS WHITE.
8	Y OR N IN TINNED COLUMN INDICATES YES OR NO.
9	A LETTER WITH AN ASTERISK SUFFIX. INDICATES A LOWER CASE LETTER.
10	VENDOR ITEM - SEE SPECIFICATION CONTROL DRAWING.
11	MARK IDENTIFICATION BAND WITH REFERENCE DESIGNATION AS NOTED .12 INCH HIGH COLOR WHITE. HOT IMPRESSION STAMPING PER ND1002019. CENTRALIZE.
12	MARK SLEEVING WITH REFERENCE DESIGNATIONS AS SHOWN .12 INCH HIGH. COLOR BLACK PER ND1002019.
13	MARK SLEEVING OF MULTI-CONDUCTORS WITH THE CONDUCTOR NUMBER .12 INCH HIGH. COLOR BLACK. PER ND1002019 WHEN SLEEVING ITEM NUMBERS FOLLOW AN A OR T IN THE ACCESSORIES ITEM NUMBER FIELD.

MANNED SPACECRAFT CENTER HOUSTON, TEXAS	SIZE A	1900994	
SCALE-NONE	REV LTR C		SHEET 2 OF 13

PENNANT NOTE — GENERAL NOTES

14 A OR Y PREFIX IN THE ACCESSORIES ITEM NUMBER COLUMN INDICATES THE READING POSITION AWAY FROM TERMINATION OR TOWARD TERMINATION RESPECTIVELY, OF THE WIRE MARKER SLEEVE.

15 THE SUFFIX LETTER OF A CONDUCTOR IDENTIFICATION NUMBER INDICATES CONDUCTOR SHIELDING, COLOR, OR MARKING.
- A - FROM END SHIELD
- L - WHITE WITH BLUE TRACER
- R - WHITE WITH RED TRACER
- Y - WHITE WITH YELLOW TRACER

16 ASSEMBLE CONTACTS IN ALL CONNECTOR GROMMET HOLES.

17 SECURE TO CABLE USING ITEM 22, MARKING TO READ AWAY FROM CONNECTOR

18 SEAL ZIPPER TUBING PER ND1002155

19 SERIALIZE PER ND1002029

20 THIS ITEM FURNISHED WITH ITEM 5

21 ITEM 24 SHALL BE SHORTENED WHEN NECESSARY TO AVOID INTERFERENCE WITH FERRULES AND MAY BE CUT LENGTHWISE ON ONE SIDE. SELECT ONE OR MORE OF ITEM 24 AS REQUIRED TO FIT.

22 SEE NOTES 10 AND 16

MANNED SPACECRAFT CENTER HOUSTON, TEXAS	SIZE A	1900994	
SCALE-NONE	REV LTR C		SHEET 3 OF 19

PENNANT NOTE — GENERAL NOTES

TOLERANCE CHART, UNLESS OTHERWISE SPECIFIED

APPLICABLE LENGTH FOR WIRE OR CABLE, STRIP WIRE, STRIP JACKET, CUT WIRE OR CUT SHIELD.	TOLERANCE WIRE OR CABLE	WIRE	STRIP JACKET	WIRE	CUT SHIELD
UNDER 1 INCH	+.06-.00	+.03-.00	+.06-.06	+.06-.06	+.06-.06
1 INCH TO 6 INCHES	+.50-.00	+.06-.00	+.25-.25	+.25-.25	+.25-.25
6 INCHES TO 6 FEET	+1.00-.00		+.50-.50	+.50-.50	+.50-.50
OVER 6 FEET	+2.00-.00				

MANNED SPACECRAFT CENTER HOUSTON, TEXAS	SIZE A	1900994	
SCALE-NONE	REV LTR A		SHEET 4 OF 19

PENNANT NOTE — LIST OF MATERIALS

NOTE	ITEM	QTY	PART NO	DESCRIPTION
	1	1	1900994-001	WIRE ND1002181 TYPE 2 CLASS 4 WHT JKT 22AWG WHT/BLU WHT/RED 206 FT TOTAL LENGTH
	2	1	1900994-002	WIRE ND1002181 TYPE 1 CLASS 4 WHT JKT 22AWG WHITE 16 FT TOTAL LENGTH
	3	1	1900994-003	WIRE ND1002181 TYPE 9 CLASS 4 WHT JKT 22AWG WHT/BLU WHT/RED WHT/YEL 48 FT TOTAL LENGTH
	4	1	1900994-004	WIRE ND1002181 TYPE 1 CLASS 3, 23AWG, WHITE 75 FT TOTAL LENGTH
10	5	1	MS3126F-24-61PZ (1897047-614)	CONNECTOR PLUG
10	6	1	1010411-002	CONNECTOR PLUG
10	7	1	1000243-003	FERRULE, ELEC. COND.
10	8	1	1000242-002	FERRULE, ELEC. COND.
10	9	13	1000243-008	FERRULE, ELEC. COND.
10	10	13	1000242-007	FERRULE, ELEC. COND.
10	11	3	1000243-011	FERRULE, ELEC. COND.
10	12	5	1000242-011	FERRULE, ELEC. COND.
10	13	37	1010490-198	INSULATION, SLEEVING ELECT.
10	14	1	1010490-200	INSULATION, SLEEVING ELECT.
10	15	6	1010490-196	INSULATION, SLEEVING ELECT.
10	16	3	1010490-258	INSULATION, SLEEVING ELECT.

MANNED SPACECRAFT CENTER HOUSTON, TEXAS	SIZE A	1900994	
SCALE-NONE	REV LTR A		SHEET 5 OF 19

PENNANT NOTE — LIST OF MATERIALS

NOTE	ITEM	QTY	PART NO	DESCRIPTION
10	17	3	1016006-002	SPLICE REDUCER
10	18	108	1010464-002	CONNECTOR CONTACTS, SOCKETS
10	19	1	1016128-011	BAND IDENTIFICATION
10	20	2	1016128-041	BAND IDENTIFICATION
	21	1	1900994-005	ZIPPER TUBING ND1002155, TYPE 1, PLASTIC FLEXIBLE 1.00 IN. DIA 16 FT TOTAL LENGTH
	22	AR	MIL-T-713	LACING TAPE, TYPE P, CLASS 2, BLACK (GS-2732 NO. 18)
20	23			CONNECTOR CONTACTS, PIN
21	24	AR	1897147-104,-106,-108,-112,-116	CABLE CLAMP SLEEVE
10	25	1	1016202-024	RUBBER GROMMET
10	26	1	1015902-046	TERMINAL LUG
	27	1	1900994-006	TUBING, MODIFIED POLYVINYL CHLORIDE, FLEXIBLE, SHRINK-FIT PER 1016197-006 6 INCH TOTAL LENGTH

MANNED SPACECRAFT CENTER HOUSTON, TEXAS	SIZE A	1900994	
SCALE-NONE	REV LTR B		SHEET 6 OF 19

GIV CABLE W-46 1900994

CONDUCTOR NUMBER	INDIVIDUAL LENGTH	ITEM NO.	FROM CUT WIRE OR SHIELD STRIP WIRE OR JACKET	CIRCUIT POINT	TERMINATION SPEC	ITEM NO.	NO.	TO CUT WIRE OR SHIELD STRIP WIRE OR JACKET	CIRCUIT POINT	TERMINATION SPEC	ITEM NO.	NO.
A 1	1			290 200	9 10	5			290 200	A 13	7A	
					A 13							
A 1A	4		SHLD A1	37N				E1	37N			
A 1L			P1-Z	22N	23			P2- 14	22N	18		
A 1R			P1-Y	22N	23			P2- 1	22N	18		
A 2	1			290 200	9 10	5			290 200	A 13	7A	
					A 13							
A 2A	4		SHLD A2	37N				E1	37N			
A 2L			P1-C*	22N	23			P2- 18	22N	18		
A 2R			P1-B*	22N	23			P2- 17	22N	18		
A 3	4		P1-D*	22N	23			P2- 4	22N	18		
A 4	1			290 200	9 10	5			290 200	A 13	7A	
					A 13							
A 4A	4		SHLD A4	37N				E1	37N			
A 4L			P1-F*	22N	23			P2- 22	22N	18		
A 4R			P1-E*	22N	23			P2- 8	22N	18		
A 5	1			290 200	9 10	5			290 200	A 13	7A	
					A 13							

1. THE STD CONDUCTOR TERMINATION FIGURES ARE PER
2. DIMENSIONS ARE IN INCHES AND TWO PLACE DECIMALS.

MANNED SPACECRAFT CENTER HOUSTON, TEXAS | SIZE A | 1900994

SCALE - NONE | REV LTR + | SHEET 7 OF 13

GIV CABLE W-46 + 1900994

CONDUCTOR NUMBER	INDIVIDUAL LENGTH	ITEM NO.	FROM CUT WIRE OR SHIELD STRIP WIRE OR JACKET	CIRCUIT POINT	TERMINATION SPEC	ITEM NO.	NO.	TO CUT WIRE OR SHIELD STRIP WIRE OR JACKET	CIRCUIT POINT	TERMINATION SPEC	ITEM NO.	NO.
A 5A	4		SHLD A5	37N				E1	37N			
A 5L			P1-H*	22N	23			P2- 10	22N	18		
A 5R			P1-G*	22N	23			P2- 9	22N	18		
A 6	3			280 250	11 12	5			280 250	A 15	7A	
					A 15							
A 6A	4		SHLD A6	37N				E1	37N			
A 6L			P1-J*	22N	23			P2- 25	22N	18		
A 6R			P1-I*	22N	23			P2- 12	22N	18		
A 6Y			P1-K*	22N	23			P2- 11	22N	18		
A 7	1			280 250	9 10	5			280 250	A 13	7A	
					A 13							
A 7A	4		SHLD A7	37N				E1	37N			
A 7L			P1-N*	22N	23			P2- 68	22N	18		
A 7R			P1-M*	22N	23			P2- 67	22N	18		
A 8	1			280 250	9 10	5			280 250	A 13	7A	
					A 13							
A 8A	4		SHLD A8	37N				E2	37N			
A 8L			P1-O*	22N	23			P2- 46	22N	18		

1. THE STD CONDUCTOR TERMINATION FIGURES ARE PER
2. DIMENSIONS ARE IN INCHES AND TWO PLACE DECIMALS.

MANNED SPACECRAFT CENTER HOUSTON, TEXAS | SIZE A | 1900994

SCALE - NONE | REV LTR + | SHEET 8 OF 13

GIV CABLE W-46 + 1900994

CONDUCTOR NUMBER	INDIVIDUAL LENGTH	ITEM NO.	FROM CUT WIRE OR SHIELD STRIP WIRE OR JACKET	CIRCUIT POINT	TERMINATION SPEC	ITEM NO.	NO.	TO CUT WIRE OR SHIELD STRIP WIRE OR JACKET	CIRCUIT POINT	TERMINATION SPEC	ITEM NO.	NO.
A 8R			P1-P*	22N	23			P2- 56	22N	18		
A 9	1			280 250	9 10	5			280 250	A 13	7A	
					A 13							
A 9A	4		SHLD A9	37N				E2	37N			
A 9L			P1-S*	22N	23			P2- 90	22N	18		
A 9R			P1-R*	22N	23			P2-104	22N	18		
A 10	1			330 300	9 10	5			330 300	A 13	7A	
					A 13							
A 10A	4		SHLD A10	37N				E2	37N			
A 10L			P1-V*	22N	23			P2- 87	22N	18		
A 10R			P1-U*	22N	23			P2-101	22N	18		
A 11	2			330 300	7 8	5			330 300	A 14	7A	
					A 13							
A 11A	4		SHLD A11	37N				E2	37N			
A 11W			P1-T*	22N	23			P2- 89	22N	18		
A 12	1			330 300	9 10	5			330 300	A 13	7A	
					A 13							
A 12A	4		SHLD A12	37N				E2	37N			

1. THE STD CONDUCTOR TERMINATION FIGURES ARE PER
2. DIMENSIONS ARE IN INCHES AND TWO PLACE DECIMALS.

MANNED SPACECRAFT CENTER HOUSTON, TEXAS | SIZE A | 1900994

SCALE - NONE | REV LTR + | SHEET 9 OF 13

GIV CABLE, W-46 B 1900994

CONDUCTOR NUMBER	INDIVIDUAL LENGTH	ITEM NO.	FROM CUT WIRE OR SHIELD STRIP WIRE OR JACKET	CIRCUIT POINT	TERMINATION SPEC	ITEM NO.	NO.	TO CUT WIRE OR SHIELD STRIP WIRE OR JACKET	CIRCUIT POINT	TERMINATION SPEC	ITEM NO.	NO.
A 12L			P1-X*	22N	23			P2- 86	22N	18		
A 12R			P1-W*	22N	23			P2-100	22N	18		
A 13	3			330 300	11 12	5			330 300	A 15	7A	
					A 15							
A 13A	4		SHLD A13	37N				P1-C	22N			
A 13L			P1-Z*	22N	23			P2-108	22N	18		
A 13R			P1-Y*	22N	23			P2-107	22N	18		
A 13Y			P1-AA	22N	23			P2- 94	22N	18		
A 14	1			380 350	9 10				380 350	A 13	7A	
					A 13							
A 14A	4		SHLD A14	37N				E3	37N			
A 14L			P1-DD	22N	23			P2- 60	22N	18		
A 14R			P1-CC	22N	23			P2- 50	22N	18		
A 15	1			380 350	9 10	5			380 350	A 13	7A	
					A 13							
A 15A	4		SHLD A15	37N				E3	37N			
A 15L			P1-FF	22N	23			P2- 2	22N	18		
A 15R			P1-EE	22N	23			P2- 3	22N	18		

1. THE STD CONDUCTOR TERMINATION FIGURES ARE PER
2. DIMENSIONS ARE IN INCHES AND TWO PLACE DECIMALS.

MANNED SPACECRAFT CENTER HOUSTON, TEXAS | SIZE A | 1900994

SCALE - NONE | REV LTR B | SHEET 10 OF 13

GIV CABLE W-46 D 1900994

CONDUCTOR INDIVIDUAL LENGTH NUMBER	ITEM NO. (1)	FROM CUT WIRE OR SHIELD STRIP WIRE OR JACKET CIRCUIT POINT (2)	(3)	(4)	TERMINATION SPEC (1)	ITEM NO.	NO.	TO CUT WIRE OR SHIELD STRIP WIRE OR JACKET CIRCUIT POINT (2)	(3)	(4)	TERMINATION SPEC (1)	ITEM NO.	NO
A 16	1		380	350	9 10		5		380	350	A 13	7A	
					A 13								
A 16A	4	SHLD A16	37N					E3	37N				
A 16L		P1-JJ	22N		23			P2- 92	22N		18		
A 16R		P1-MM	22N		23			P2-106	22N		18		
A 17	3		380	350	11 12		5		380	350	A 15	7A	
					A 15								
A 17A	4	SHLD A17	37N					E3	37				
A 17L		P1-LL	22N		23			P2- 31	22N		18		
A 17R		P1-KK	22N		23			P2- 32	22N		18		
A 17Y		P1-NN	22N		23			P2- 43	22N		18		
A 18	1		430	400	9 10		5		430	400	A 13	7A	
					A 13								
A 18A	4	SHLD A18	37N					E3	37N				
A 18L		P1-PP	22N		23			P2- 29	22N		18		
A 18R		P1-NN	22N		23			P2- 28	22N		18		
A 19	4	P3- 1	25N		26			P2- 41	22N		18		
A 20	4	P1-B	22N		23			E1	37N				

(1) THE STD CONDUCTOR TERMINATION FIGURES ARE PER

(2) DIMENSIONS ARE IN INCHES AND TWO PLACE DECIMALS.

MANNED SPACECRAFT CENTER HOUSTON, TEXAS | SIZE A | 1900994

SCALE - NONE | REV LTR D | SHEET 11 OF 13

GIV CABLE W-46 E 1900994

CONDUCTOR INDIVIDUAL LENGTH NUMBER	ITEM NO. (1)	FROM CUT WIRE OR SHIELD STRIP WIRE OR JACKET CIRCUIT POINT (2)	(3)	(4)	TERMINATION SPEC (1)	ITEM NO.	NO.	TO CUT WIRE OR SHIELD STRIP WIRE OR JACKET CIRCUIT POINT (2)	(3)	(4)	TERMINATION SPEC (1)	ITEM NO.	NO.
A 21	4	E1	37N					E2	37N				
A 22	4	E2	22N					E3	37N				
A 23	4	P1-D	22N		23			P1-E	22N		23		

(1) THE STD CONDUCTOR TERMINATION FIGURES ARE PER

(2) DIMENSIONS ARE IN INCHES AND TWO PLACE DECIMALS.

MANNED SPACECRAFT CENTER HOUSTON, TEXAS | SIZE A | 1900994

SCALE - NONE | REV LTR E | SHEET 12 OF 13

REVISIONS					
SYM	ZONE	DESCRIPTION	CHG NO.	DATE	APPD
		SEE SHEET 1 FOR REVISION RECORD			

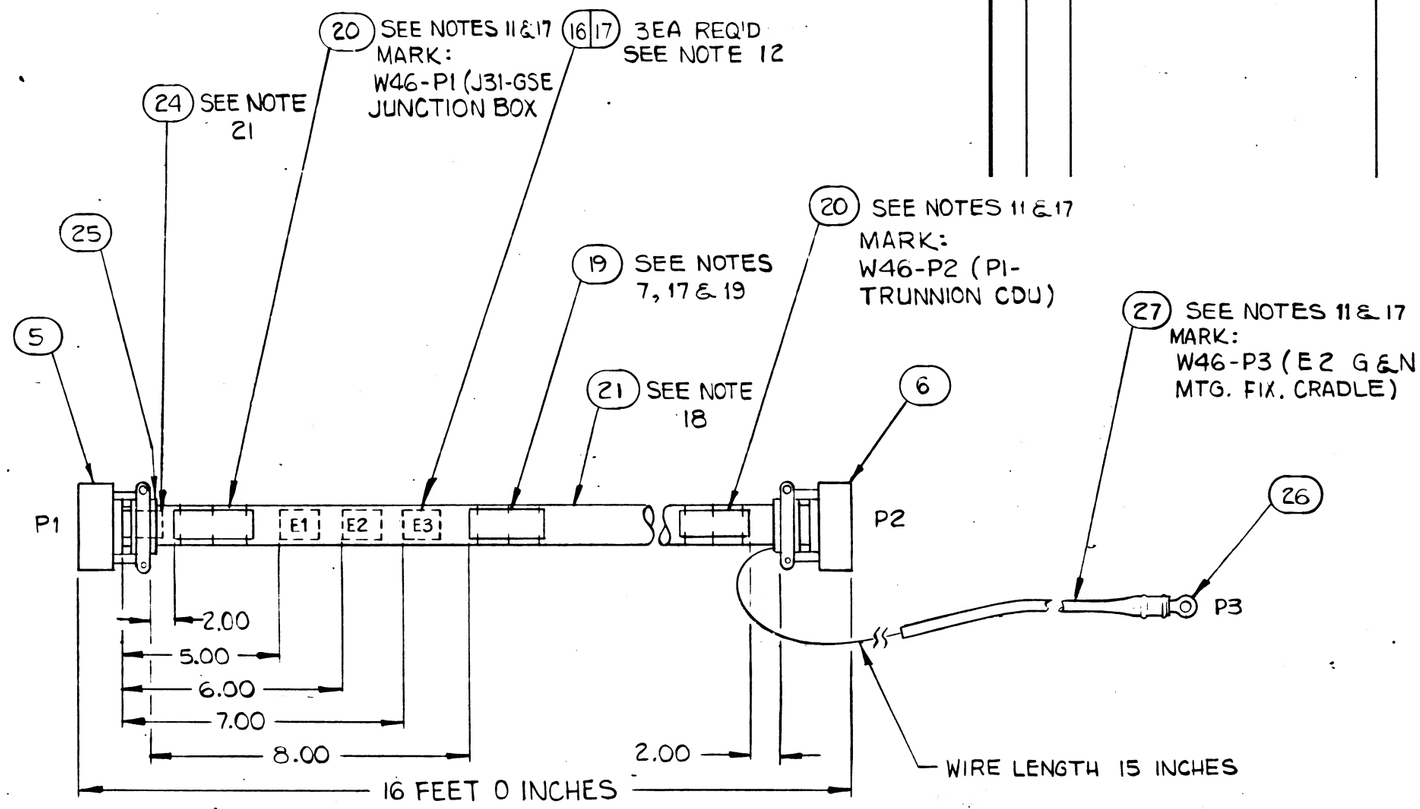

LOCATION TOLERANCE
(EXCEPT LENGTH): ±.50

NEXT ASSY	USED ON	UNLESS OTHERWISE SPECIFIED DIMENSIONS ARE IN INCHES TOLERANCES ON FRACTIONS + — DECIMALS + — ANGLES + —	AC SPARK PLUG DIVISION, GMC MILWAUKEE, WISCONSIN	MANNED SPACECRAFT CENTER HOUSTON, TEXAS
APPLICATION			ACSP PN	CABLE, INTERCONNECT W46 ISS, OSS TESTING
			DRAWN ORZEL DATE 11 NOV 63	
			CHECKED M. MANNING 20 NOV 63	
			APPROVAL N. ABRAHAM 20 NOV 63	
		DO NOT SCALE THIS DRAWING	APPROVAL	
		MATERIAL	NASA APPROVAL	CODE IDENT NO / SIZE C / 1900994
		CONTRACT	MIT APPROVAL	SCALE NONE / SHEET 13 OF 13

MIL 1077C-P

1900994

PENNANT NOTE	GENERAL NOTES
1	SEE CONDUCTOR CHART, PENNANT NOTE 1.
2	SEE CONDUCTOR CHART, PENNANT NOTE 2.
3	INTERPRET DRAWING IN ACCORDANCE WITH STANDARDS PRESCRIBED BY MIL-D-70327.
4	MARK CONDUCTOR IDENTIFICATION ON SINGLE CONDUCTORS PER ND1002019 OMITTING ALL SUFFIX LETTERS EXCEPT A AND B.
5	SPACING OF CONDUCTOR IDENTIFICATION SHALL BE EVERY 15 INCHES MAX. AND AT EACH TERMINATION.
6	SPIRALLING OF THE MARKING IS ALLOWED.
7	IDENTIFY USING DRAWING NO. AND REVISION LETTER PER MIL-STD-130 (ES-267). .12 INCH HIGH CHARACTERS WHITE.
8	Y OR N IN TINNED COLUMN INDICATES YES OR NO.
9	A LETTER WITH AN ASTERISK SUFFIX, INDICATES A LOWER CASE LETTER.
10	VENDOR ITEM - SEE SPECIFICATION CONTROL DRAWING.
11	MARK IDENTIFICATION BAND WITH REFERENCE DESIGNATION AS NOTED .12 INCH HIGH COLOR WHITE, HOT IMPRESSION STAMPING PER ND1002019. CENTRALIZE.
12	MARK SLEEVING WITH REFERENCE DESIGNATIONS AS SHOWN .12 INCH HIGH, COLOR BLACK PER ND1002019.
13	MARK SLEEVING OF MULTI-CONDUCTORS WITH THE CONDUCTOR NUMBER .12 INCH HIGH, COLOR BLACK, PER ND1002019 WHEN SLEEVING ITEM NUMBERS FOLLOW AN A OR T IN THE ACCESSORIES ITEM NUMBER FIELD.

MANNED SPACECRAFT CENTER HOUSTON, TEXAS	SIZE A	1900994
SCALE - NONE	REV LTR C	SHEET 2 OF 13

MIL 2084 4-63

PENNANT NOTE	GENERAL NOTES
14	A OR T PREFIX IN THE ACCESSORIES ITEM NUMBER COLUMN INDICATES THE READING POSITION AWAY FROM TERMINATION OR TOWARD TERMINATION RESPECTIVELY, OF THE WIRE MARKER SLEEVE.
15	THE SUFFIX LETTER OF A CONDUCTOR IDENTIFICATION NUMBER INDICATES CONDUCTOR SHIELDING, COLOR, OR MARKING. A - FROM END SHIELD L - WHITE WITH BLUE TRACER R - WHITE WITH RED TRACER Y - WHITE WITH YELLOW TRACER
16	ASSEMBLE CONTACTS IN ALL CONNECTOR GROMMET HOLES.
17	SECURE TO CABLE USING ITEM 22, MARKING TO READ AWAY FROM CONNECTOR
18	SEAL ZIPPER TUBING PER ND1002153
19	SERIALIZE PER ND1002023
20	THIS ITEM FURNISHED WITH ITEM 5
21	ITEM 24 SHALL BE SHORTENED WHEN NECESSARY TO AVOID INTERFERENCE WITH FERRULES AND MAY BE CUT LENGTHWISE ON ONE SIDE. SELECT ONE OR MORE OF ITEM 24 AS REQUIRED TO FIT.
22	SEE NOTES 10 AND 16

MANNED SPACECRAFT CENTER HOUSTON, TEXAS	SIZE A	1900994
SCALE - NONE	REV LTR C	SHEET 3 OF 13

MIL 2084 4-63

PENNANT NOTE — GENERAL NOTES

TOLERANCE CHART, UNLESS OTHERWISE SPECIFIED —

APPLICABLE LENGTH FOR WIRE OR CABLE, STRIP WIRE, STRIP JACKET, CUT WIRE OR CUT SHIELD.	TOLERANCE: WIRE OR CABLE	STRIP: WIRE	STRIP: JACKET	CUT: WIRE	CUT: SHIELD
UNDER 1 INCH	+ .06-.00	+.03-.00	+.06-.06	+.06-.06	+.06-.06
1 INCH TO 6 INCHES	+ .50-.00	+.06-.00	+.25-.25	+.25-.25	+.25-.25
6 INCHES TO 6 FEET	+1.00-.00		+.50-.50	+.50-.50	+.50-.50
OVER 6 FEET	+2.00-.00				

MANNED SPACECRAFT CENTER HOUSTON, TEXAS	SIZE A	1900994
SCALE - NONE	REV LTR A	SHEET 4 OF 13

MIL 2084 4-63

APPLICATION			REVISIONS		
NEXT ASSY	USED ON	SYM	DESCRIPTION	DATE	APPROVAL
1901308	1900005-011	A	CHANGE IN ACCORDANCE WITH CM 193774 TDRR 09127	17 FEB 64	RJF
		B	CHANGE IN ACCORDANCE WITH CM 195639	20 MAR 64	RWX
			REVISED CUSTOMER DATA V2-64		
		C	CHANGE IN ACCORDANCE WITH CM 196135 PER TDRR 08127	2 APR 64	GJL
		D	CHANGE IN ACCORDANCE WITH CM197544 TDRR 10688 REVISED CUSTOMER DATA V2-64	28 MAY 64	R.B.
		E	CHANGE IN ACCORDANCE WITH CM 197759 TDRR 11323	23 JUN 64	J.J.J.
		F	CHANGE IN ACCORDANCE WITH CM 199021 TDRR 12269	30 JUL 64	JWP

FOR INFORMATION ONLY

CLASS B RELEASE TDR No. 05653 DATE 1/7/69

REV															
SHEET															
REV STATUS															
OF SHEETS	SHEET	1	2	3	4	5	6	7	8	9	10	11	12	13	

AC SPARK PLUG DIVISION, GMC
MILWAUKEE, WISCONSIN

ACSP PN

MANNED SPACECRAFT CENTER HOUSTON, TEXAS

DRAWN — DATE 11 NOV 63
CHECKED — 22 NOV 63
APPROVAL
APPROVAL

CABLE, INTERCONNECT W46
ISS, OSS TESTING

NASA APPROVAL
MIT APPROVAL
CONTRACT NAS 9-497

CODE IDENT NO.	SIZE		REV
	A	1900994	E
SCALE —		SHEET 1 OF 13	

INCHES 0 1

LIST OF MATERIALS

PENNANT NOTE	ITEM	QTY	PART NO	DESCRIPTION
10	17	3	1016006-002	SPLICE REDUCER
10	18	108	1010464-002	CONNECTOR CONTACTS, SOCKETS
10	19	1	1016128-011	BAND IDENTIFICATION
10	20	2	1016128-041	BAND IDENTIFICATION
	21	1	1900994-005	ZIPPER TUBING ND1002155, TYPE 1, PLASTIC FLEXIBLE 1.00 IN. DIA 16 FT TOTAL LENGTH
	22	AR	MIL-T-713	LACING TAPE, TYPE P, CLASS 2, BLACK (ES-2732 NO. 18)
20	23			CONNECTOR CONTACTS, PIN
21	24	AR	1897147-104,-106,-108,-112,-116	CABLE CLAMP SLEEVE
10	25	1	1016282-024	RUBBER GROMMET
10	26	1	1015902-046	TERMINAL LUG
	27	1	1900994-006	TUBING, MODIFIED POLYVINYL CHLORIDE, FLEXIBLE, SHRINK-FIT PER 1016197-006 6 INCH TOTAL LENGTH

MANNED SPACECRAFT CENTER HOUSTON, TEXAS | SIZE A | 1900994
SCALE-NONE | REV LTR D | SHEET 6 OF 13

MIL 2084 4-63

LIST OF MATERIALS

PENNANT NOTE	ITEM	QTY	PART NO	DESCRIPTION
	1	1	1900994-001	WIRE ND1002181 TYPE 2 CLASS 4 WHT JKT 22AWG WHT/BLU WHT/RED 208 FT TOTAL LENGTH
	2	1	1900994-002	WIRE ND1002181 TYPE 1 CLASS 4 WHT JKT 22AWG WHITE 16 FT TOTAL LENGTH
	3	1	1900994-003	WIRE ND1002181 TYPE 3 CLASS 4 WHT JKT 22AWG WHT/BLU WHT/RED WHT/YEL 48 FT TOTAL LENGTH
	4	1	1900994-004	WIRE ND1002181 TYPE 1 CLASS 1, 22AWG, WHITE 75 FT TOTAL LENGTH
16	5	1	MS3126F-24-61PZ (1897047-614)	CONNECTOR PLUG
22	6	1	1010411-002	CONNECTOR PLUG
10	7	1	1000243-003	FERRULE, ELEC. COND.
10	8	1	1000242-002	FERRULE, ELEC. COND.
10	9	13	1000243-008	FERRULE, ELEC. COND.
10	10	13	1000242-007	FERRULE, ELEC. COND.
10	11	3	1000243-011	FERRULE, ELEC. COND.
10	12	3	1000242-011	FERRULE, ELEC. COND.
10	13	27	1010490-198	INSULATION, SLEEVING ELECT.
10	14	1	1010490-200	INSULATION, SLEEVING ELECT.
10	15	6	1010490-196	INSULATION, SLEEVING ELECT.
10	16	3	1010490-258	INSULATION, SLEEVING ELECT.

MANNED SPACECRAFT CENTER HOUSTON, TEXAS | SIZE A | 1900994
SCALE-NONE | REV LTR A | SHEET 5 OF 13

MIL 2084 4-63

CONDUCTOR INDIVIDUAL LENGTH NUMBER	ITEM NO. [2]		FROM CUT WIRE OR SHIELD STRIP WIRE OR JACKET CIRCUIT POINT [2]	T I N [2]	TERMINATION SPEC. [1] ITEM NO.	NO.	TO CUT WIRE OR SHIELD STRIP WIRE OR JACKET CIRCUIT POINT [2]	T I N [2]	TERMINATION SPEC [1] ITEM NO.	NO.
A 1	1		230	200	9 10	5	230	200	A 13	7A
					A 13					
A 1A	4		SHLD A1	37N			E1	37N		
A 1L			P1-Z	22N	23		P2- 14	22N	18	
A 1R			P1-Y	22N	23		P2- 1	22N	18	
A 2	1		230	200	9 10	5	230	200	A 13	7A
					A 13					
A 2A	4		SHLD A2	37N			E1	37N		
A 2L			P1-C*	22N	23		P2- 18	22N	18	
A 2R			P1-B*	22N	23		P2- 17	22N	18	
A 3	4		P1-D*	22N	23		P2- 4	22N	18	
A 4	1		230	200	9 10	5	230	200	A 13	7A
					A 13					
A 4A	4		SHLD A4	37N			E1	37N		
A 4L			P1-F*	22N	23		P2- 22	22N	18	
A 4R			P1-E*	22N	23		P2- 8	22N	18	
A 5	1		230	200	9 10	5	230	200	A 13	7A
					A 13					

[1] THE STD CONDUCTOR TERMINATION FIGURES ARE PER
[2] DIMENSIONS ARE IN INCHES AND TWO PLACE DECIMALS.

MANNED SPACECRAFT CENTER HOUSTON, TEXAS | SIZE A | 1900994
SCALE-NONE | REV LTR + | SHEET 7 OF 13

MIL 2085 - 4-63 WIR

CONDUCTOR INDIVIDUAL LENGTH NUMBER	ITEM NO. [2]		FROM CUT WIRE OR SHIELD STRIP WIRE OR JACKET CIRCUIT POINT [2]	T I N [2]	TERMINATION SPEC. [1] ITEM NO.	NO.	TO CUT WIRE OR SHIELD STRIP WIRE OR JACKET CIRCUIT POINT [2]	T I N [2]	TERMINATION SPEC [1] ITEM NO.	NO.
A 5A	4		SHLD A5	37N			E1	37N		
A 5L			P1-H*	22N	23		P2- 10	22N	18	
A 5R			P1-G*	22N	23		P2- 9	22N	18	
A 6	3		280	250	11 12	5	280	250	A 15	7A
					A 15					
A 6A	4		SHLD A6	37N			E1	37N		
A 6L			P1-J*	22N	23		P2- 25	22N	18	
A 6R			P1-I*	22N	23		P2- 12	22N	18	
A 6Y			P1-K*	22N	23		P2- 11	22N	18	
A 7	1		280	250	9 10	5	280	250	A 13	7A
					A 13					
A 7A	4		SHLD A7	37N			E1	37N		
A 7L			P1-N*	22N	23		P2- 68	22N	18	
A 7R			P1-M*	22N	23		P2- 67	22N	18	
A 8	1		280	250	9 10	5	280	250	A 13	7A
					A 13					
A 8A	4		SHLD A8	37N			E2	37N		
A 8L			P1-Q*	22N	23		P2- 66	22N	18	

[1] THE STD CONDUCTOR TERMINATION FIGURES ARE PER
[2] DIMENSIONS ARE IN INCHES AND TWO PLACE DECIMALS.

MANNED SPACECRAFT CENTER HOUSTON, TEXAS | SIZE A | 1900994
SCALE-NONE | REV LTR + | SHEET 8 OF 13

MIL 2085 - 4-63 WIR

INCHES 0 1 2 PHOTOGRAPHIC SCALE ONLY

GIV CABLE W-46 B 1900994

CONDUCTOR INDIVIDUAL LENGTH NUMBER	ITEM NO.	2	FROM CUT WIRE OR SHIELD STRIP WIRE OR JACKET CIRCUIT POINT	2	TIN	2	TERMINATION SPEC. 1 ITEM NO.			NO.	TO CUT WIRE OR SHIELD STRIP WIRE OR JACKET CIRCUIT POINT	2	TIN	2	TERMINATION SPEC 1 ITEM NO.			NO.
A 12L			P1-X*	22N			23				P2- 86	22N			18			
A 12R			P1-W*	22N			23				P2-100	22N			18			
A 13	3			330		300	11	12		5		330		300	A	15		7A
							A	15										
A 13A	4		SHLD A13	37N							P1-C	22N						
A 13L			P1-Z*	22N			23				P2-108	22N			18			
A 13R			P1-Y*	22N			23				P2-107	22N			18			
A 13Y			P1-AA	22N			23				P2- 94	22N			18			
A 14	1			380		350	9	10				380		350	A	13		7A
							A	13										
A 14A	4		SHLD A14	37N							E3	37N						
A 14L			P1-DD	22N			23				P2- 60	22N			18			
A 14R			P1-CC	22N			23				P2- 50	22N			18			
A 15	1			380		350	9	10		5		380		350	A	13		7A
							A	13										
A 15A	4		SHLD A15	37N							E3	37N						
A 15L			P1-FF	22N			23				P2- 2	22N			18			
A 15R			P1-EE	22N			23				P2- 3	22N			18			

1 THE STD CONDUCTOR TERMINATION FIGURES ARE PER
2 DIMENSIONS ARE IN INCHES AND TWO PLACE DECIMALS.

MANNED SPACECRAFT CENTER HOUSTON, TEXAS | SIZE A | 1900994
SCALE-NONE | REV LTR B | SHEET 10 OF 13

MIL 2088 - 4-63 WIR

GIV CABLE W-46 D 1900994

CONDUCTOR INDIVIDUAL LENGTH NUMBER	ITEM NO.	2	FROM CUT WIRE OR SHIELD STRIP WIRE OR JACKET CIRCUIT POINT	2	TIN	2	TERMINATION SPEC. 1 ITEM NO.			NO.	TO CUT WIRE OR SHIELD STRIP WIRE OR JACKET CIRCUIT POINT	2	TIN	2	TERMINATION SPEC 1 ITEM NO.			NO.
A 16	1			380		350	9	10		5		380		350	A	13		7A
							A	13										
A 16A	4		SHLD A16	37N							E3	37N						
A 16L			P1-JJ	22N			23				P2- 92	22N			18			
A 16R			P1-HH	22N			23				P2-106	22N			18			
A 17	3			380		350	11	12		5		380		350	A	15		7A
							A	15										
A 17A	4		SHLD A17	37N							E3	37						
A 17L			P1-LL	22N			23				P2- 31	22N			18			
A 17R			P1-KK	22N			23				P2- 32	22N			18			
A 17Y			P1-MM	22N			23				P2- 43	22N			18			
A 18	1			430		400	9	10		5		430		400	A	13		7A
							A	13										
A 18A	4		SHLD A18	37N							E3	37N						
A 18L			P1-PP	22N			23				P2- 29	22N			18			
A 18R			P1-NN	22N			23				P2- 28	22N			18			
A 19	4		P3- 1	25N			26				P2- 41	22N			18			
A 20	4		P1-B	22N			23				E1	37N						

1 THE STD CONDUCTOR TERMINATION FIGURES ARE PER
2 DIMENSIONS ARE IN INCHES AND TWO PLACE DECIMALS.

MANNED SPACECRAFT CENTER HOUSTON, TEXAS | SIZE A | 1900994
SCALE-NONE | REV LTR D | SHEET 11 OF 13

MIL 2088 - 4-63 WIR

GIV CABLE W-46 + 1900994

CONDUCTOR INDIVIDUAL LENGTH NUMBER	ITEM NO.	2	FROM CUT WIRE OR SHIELD STRIP WIRE OR JACKET CIRCUIT POINT	2	TIN	2	TERMINATION SPEC. 1 ITEM NO.			NO.	TO CUT WIRE OR SHIELD STRIP WIRE OR JACKET CIRCUIT POINT	2	TIN	2	TERMINATION SPEC 1 ITEM NO.			NO.
A 8R			P1-P*	22N			23				P2- 56	22N			18			
A 9	1			280		250	9	10		5		280		250	A	13		7A
							A	13										
A 9A	4		SHLD A9	37N							E2	37N						
A 9L			P1-S*	22N			23				P2- 90	22N			18			
A 9R			P1-R*	22N			23				P2-104	22N			18			
A 10	1			330		300	9	10		5		330		300	A	13		7A
							A	13										
A 10A	4		SHLD A10	37N							E2	37N						
A 10L			P1-V*	22N			23				P2- 87	22N			18			
A 10R			P1-U*	22N			23				P2-101	22N			18			
A 11	2			330		300	7	8		5		330		300	A	14		7A
							A	13										
A 11A	4		SHLD A11	37N							E2	37N						
A 11W			P1-T*	22N			23				P2- 89	22N			18			
A 12	1			330		300	9	10		5		330		300	A	13		7A
							A	13										
A 12A	4		SHLD A12	37N							E2	37N						

1 THE STD CONDUCTOR TERMINATION FIGURES ARE PER
2 DIMENSIONS ARE IN INCHES AND TWO PLACE DECIMALS.

MANNED SPACECRAFT CENTER HOUSTON, TEXAS | SIZE A | 1900994
SCALE-NONE | REV LTR + | SHEET 9 OF 13

MIL 2088 - 4-63 WIR

GIV CABLE W-46 E 1900994

CONDUCTOR INDIVIDUAL LENGTH NUMBER	ITEM NO.	2	FROM CUT WIRE OR SHIELD STRIP WIRE OR JACKET CIRCUIT POINT	2	TIN	2	TERMINATION SPEC. 1 ITEM NO.			NO.	TO CUT WIRE OR SHIELD STRIP WIRE OR JACKET CIRCUIT POINT	2	TIN	2	TERMINATION SPEC 1 ITEM NO.			NO.
A 21	4		E1	37N							E2	37N						
A 22	4		E2	22N							E3	37N						
A 23	4		P1-D	22N			23				P1-E	22N			23			

1 THE STD CONDUCTOR TERMINATION FIGURES ARE PER
2 DIMENSIONS ARE IN INCHES AND TWO PLACE DECIMALS.

MANNED SPACECRAFT CENTER HOUSTON, TEXAS | SIZE A | 1900994
SCALE-NONE | REV LTR E | SHEET 12 OF 13

MIL 2088 - 4-63 WIR

INCHES

REVISIONS					
SYM	ZONE	DESCRIPTION	CHG NO.	DATE	APPD.
		SEE SHEET 1 FOR REVISION RECORD			

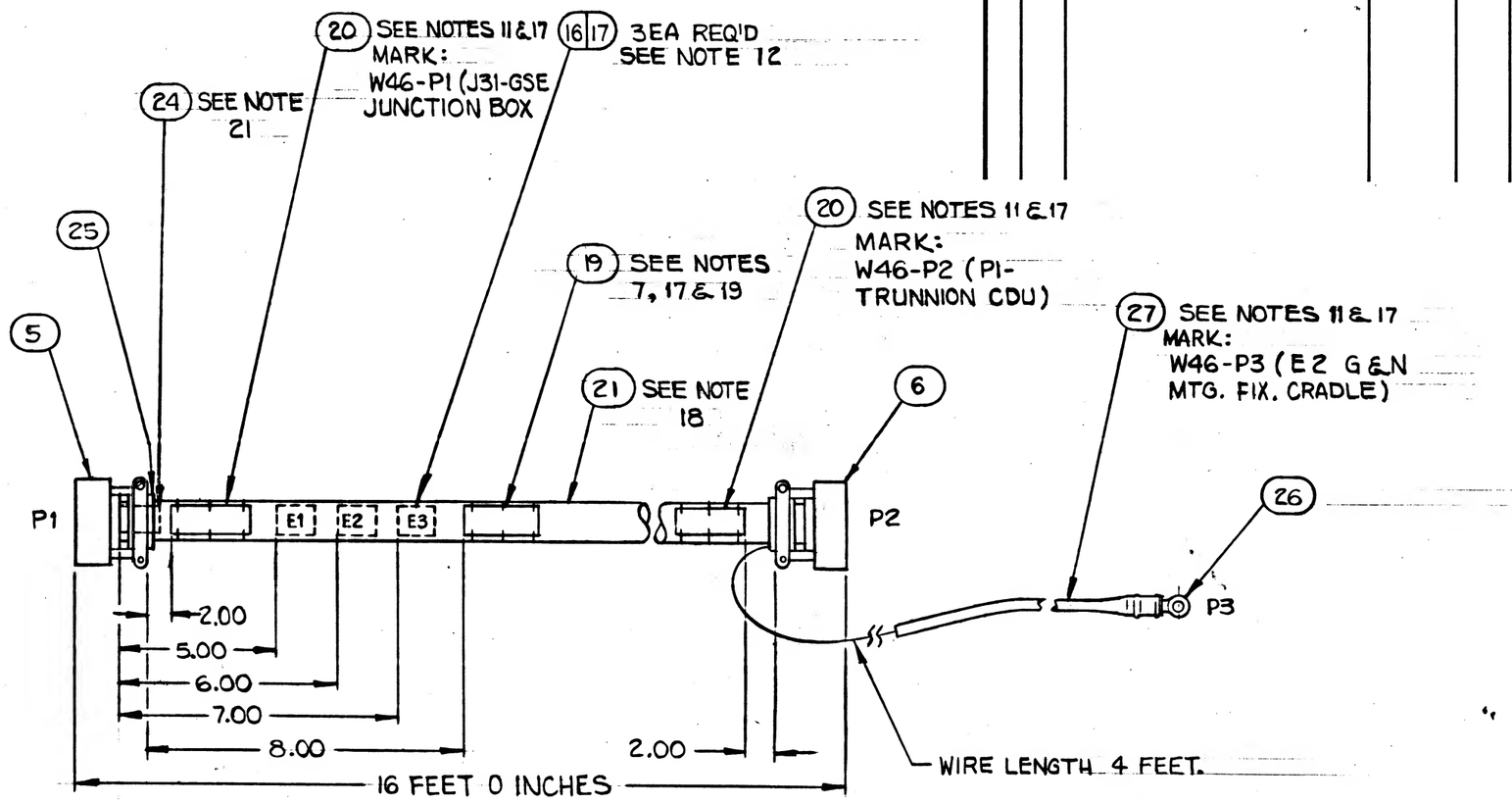

LOCATION TOLERANCE (EXCEPT LENGTH): ±.50

NEXT ASSY	USED ON
APPLICATION	

UNLESS OTHERWISE SPECIFIED DIMENSIONS ARE IN INCHES TOLERANCES ON

FRACTIONS	DECIMALS	ANGLES
+ —	+ —	+ —
− —	− —	− —

DO NOT SCALE THIS DRAWING

MATERIAL

CONTRACT

AC SPARK PLUG DIVISION, GMC
MILWAUKEE, WISCONSIN

ACSP PN

DRAWN ORZEL DATE 11 NOV 63
CHECKED M. MANNING 20 NOV 63
APPROVAL N. ABRAHAM 20 NOV 63
APPROVAL 9/15/64
NASA APPROVAL 9/15/64
MIT APPROVAL 9/15/64

MANNED SPACECRAFT CENTER
HOUSTON, TEXAS

CABLE, INTERCONNECT W46 ISS, OSS TESTING

1900994-1

CODE IDENT NO. | SIZE C | 1900994

SCALE NONE | SHEET 13 OF 13

MIL 1077C-P

INCHES 0 1 2
PHOTOGRAPHIC SCALE ONLY

REVISIONS

SYM	ZONE	DESCRIPTION	CHG NO.	DATE	APPD
H		CHANGE IN ACCORDANCE WITH CM 304514 PER TDRR 15400		6 NOV 64	JWP

CODE IDENT NO.	SIZE	
99974	A	1900994
SCALE NONE	REV LTR H	SHEET 1A

MIL 13774 11-62

PENNANT NOTE	GENERAL NOTES
1	SEE CONDUCTOR CHART, PENNANT NOTE 1.
2	SEE CONDUCTOR CHART, PENNANT NOTE 2.
3	INTERPRET DRAWING IN ACCORDANCE WITH STANDARDS PRESCRIBED BY MIL-D-70327.
4	MARK CONDUCTOR IDENTIFICATION ON SINGLE CONDUCTORS PER ND1002019 OMITTING ALL SUFFIX LETTERS EXCEPT A AND B.
5	SPACING OF CONDUCTOR IDENTIFICATION SHALL BE EVERY 15 INCHES MAX. AND AT EACH TERMINATION.
6	SPIRALLING OF THE MARKING IS ALLOWED.
7	IDENTIFY USING DRAWING NO. AND REVISION LETTER PER MIL-STD-130 (ES-267). .12 INCH HIGH CHARACTERS WHITE.
8	Y OR N IN TINNED COLUMN INDICATES YES OR NO.
9	A LETTER WITH AN ASTERISK SUFFIX, INDICATES A LOWER CASE LETTER.
10	VENDOR ITEM - SEE SPECIFICATION CONTROL DRAWING.
11	MARK IDENTIFICATION BAND WITH REFERENCE DESIGNATION AS NOTED .12 INCH HIGH COLOR WHITE, HOT IMPRESSION STAMPING PER ND1002019. CENTRALIZE.
12	MARK SLEEVING WITH REFERENCE DESIGNATIONS AS SHOWN .12 INCH HIGH, COLOR BLACK PER ND1002019.
13	MARK SLEEVING OF MULTI-CONDUCTORS WITH THE CONDUCTOR NUMBER .12 INCH HIGH, COLOR BLACK, PER ND1002019 WHEN SLEEVING ITEM NUMBERS FOLLOW AN A OR T IN THE ACCESSORIES ITEM NUMBER FIELD.

MANNED SPACECRAFT CENTER HOUSTON, TEXAS	SIZE A	1900994
SCALE-NONE	REV LTR G	SHEET 2 OF 16

MIL 2084 4-63

APPLICATION

NEXT ASSY	USED ON
1901308	1900005-011

REVISIONS TDRR 65653

SYM	DESCRIPTION	DATE	APPROVAL
A	CHANGE IN ACCORDANCE WITH CM 193774 TDRR 09127	17 FEB 64	RJF
B	CHANGE IN ACCORDANCE WITH CM 195639 REVISED CUSTOMER DATA V2-64	20 MAR 64	RWJ
C	CHANGE IN ACCORDANCE WITH CM 196135 PER TDRR 09129	2 APR 64	CJL
D	CHANGE IN ACCORDANCE WITH CM 197544 TDRR 16688 REVISED CUSTOMER DATA V2-64	28 MAY 64	R.B.
E	CHANGE IN ACCORDANCE WITH CM 197759 TDRR 11373	23 JUN 64	JJJ
F	CHANGE IN ACCORDANCE WITH CM 199021 TDRR 12269	30 JUL 64	JWP
G	CHANGE IN ACCORDANCE WITH CM 302650 REVISED CUSTOMER DATA (V2-64) TDRR 16399	7 OCT 64	JJJ

(H)

REV	H	H	G	G	G	H	G	G	G	G	H	H	G
SHEET	1	2	3	4	5	6	7	8	9	10	11	12	13	14	15

REV STATUS	OF SHEETS
H	1A

AC SPARK PLUG DIVISION, GMC
MILWAUKEE, WISCONSIN

ACSP PN

MANNED SPACECRAFT CENTER HOUSTON, TEXAS

CABLE, INTERCONNECT W46
ISS, OSS TESTING

		DATE
DRAWN		11 NOV 63
CHECKED		20 NOV 63
APPROVAL		20 NOV 63
APPROVAL		
NASA APPROVAL		
MIT APPROVAL		

CODE IDENT NO.	SIZE		REV
	A	1900994	H
SCALE —		SHEET 1 OF 16	

CONTRACT NAS 9-497

PENNANT NOTE	GENERAL NOTES
14	A OR T PREFIX IN THE ACCESSORIES ITEM NUMBER COLUMN INDICATES THE READING POSITION AWAY FROM TERMINATION OR TOWARD TERMINATION RESPECTIVELY, OF THE WIRE MARKER SLEEVE.
15	THE SUFFIX LETTER OF A CONDUCTOR IDENTIFICATION NUMBER INDICATES CONDUCTOR SHIELDING, COLOR, OR MARKING. A - FROM END SHIELD E-GREY L - WHITE WITH BLUE TRACER X-COAX OUTER COND. R - WHITE WITH RED TRACER Y - WHITE WITH YELLOW TRACER
16	ASSEMBLE CONTACTS IN ALL CONNECTOR GROMMET HOLES.
17	SECURE TO CABLE USING ITEM 22, MARKING TO READ AWAY FROM CONNECTOR
18	SEAL ZIPPER TUBING PER ND1002153
19	SERIALIZE PER ND1002023
20	THIS ITEM FURNISHED WITH ITEM 5
21	ITEM 24 SHALL BE SHORTENED WHEN NECESSARY TO AVOID INTERFERENCE WITH FERRULES AND MAY BE CUT LENGTHWISE ON ONE SIDE. SELECT ONE OR MORE OF ITEM 24 AS REQUIRED TO FIT.
22	SEE NOTES 10 AND 16

MANNED SPACECRAFT CENTER HOUSTON, TEXAS	SIZE A	1900994
SCALE-NONE	REV LTR H	SHEET 3 OF 16

MIL 2084 4-63

PENNANT LIST OF MATERIALS

NOTE	ITEM	QTY	PART NO	DESCRIPTION
	1	1	1900994-001	WIRE ND1002181 TYPE 2 CLASS 4 WHT JKT 22AWG WHT/BLU WHT/RED 160 FT TOTAL LENGTH
	2			DELETED (1900994-002) DELETED
	3	1	1900994-003	WIRE ND1002181 TYPE 3 CLASS 4 WHT JKT 22AWG WHT/BLU WHT/RED WHT/YEL 37 FT TOTAL LENGTH
	4	1	1900994-004	WIRE ND1002181 TYPE 1 CLASS 1, 22AWG, WHITE 77 FT 9 INCHES TOTAL LENGTH
16	5	1	MS3126F-24-61PZ (1897047-614)	CONNECTOR PLUG
22	6	1	1010411-002	CONNECTOR PLUG
	7			DELETED (1000243-003)
	8			DELETED (1000242-002)
10	9	10	1000243-008	FERRULE, ELEC. COND.
10	10	10	1000242-007	FERRULE, ELEC. COND.
10	11	3	1000243-011	FERRULE, ELEC. COND.
10	12	3	1000242-011	FERRULE, ELEC. COND.
10	13	21	1010490-198	INSULATION, SLEEVING ELECT.
	14			DELETED (1010490-200)
10	15	5	1010490-196	INSULATION, SLEEVING ELECT.
10	16	3	1010490-258	INSULATION, SLEEVING ELECT.

MANNED SPACECRAFT CENTER HOUSTON, TEXAS | SIZE A | 1900994
SCALE-NONE | REV LTR G | SHEET 5 OF 106

MIL 2084 4-63

PENNANT LIST OF MATERIALS

NOTE	ITEM	QTY	PART NO	DESCRIPTION
10	17	3	1016006-002	SPLICE REDUCER
10	18	108	1010464-002	CONNECTOR CONTACTS, SOCKETS
10	19	1	1016128-011	BAND IDENTIFICATION
10	20	2	1016128-041	BAND IDENTIFICATION
	21	1	1900994-005	ZIPPER TUBING ND1002155, TYPE 1, PLASTIC FLEXIBLE 1.00 IN. DIA 16 FT TOTAL LENGTH
	22	AR	MIL-T-713	LACING TAPE, TYPE P, CLASS 2, BLACK (ES-2732 NO. 18)
20	23			CONNECTOR CONTACTS, PIN
21	24	AR	1897147-104,-106,-108,-112,-116	CABLE CLAMP SLEEVE
10	25	1	1016282-024	RUBBER GROMMET
10	26	1	1015902-046	TERMINAL LUG
	27	1	1900994-006	TUBING, MODIFIED POLYVINYL CHLORIDE, FLEXIBLE, SHRINK-FIT PER 1016197-006 6 INCH TOTAL LENGTH
	28	1	1900994-007	WIRE COAXIAL MIL-C-17/69A RG188A/U 14 FEET TOTAL LENGTH
10	29	3	1000243-006	FERRULE, ELECTRICAL CONNECTOR
10	30	3	1000242-005	FERRULE, ELECTRICAL CONNECTOR
10	31	6	1010490-202	INSULATION SLEEVING
	32	4	1016369-420	PIN CONTACT

MANNED SPACECRAFT CENTER HOUSTON, TEXAS | SIZE A | 1900994
SCALE-NONE | REV LTR G | SHEET 6 OF 106

MIL 2084 4-63

PENNANT GENERAL NOTES

NOTE

TOLERANCE CHART, UNLESS OTHERWISE SPECIFIED ——

APPLICABLE LENGTH FOR WIRE OR CABLE, STRIP WIRE, STRIP JACKET, CUT WIRE OR CUT SHIELD.	TOLERANCE				
	WIRE OR CABLE	STRIP WIRE	STRIP JACKET	CUT WIRE	CUT SHIELD
UNDER 1 INCH	+ .06-.00	+.03-.00	+.06-.06	+.06-.06	+.06-.06
1 INCH TO 6 INCHES	+ .50-.00	+.06-.00	+.25-.25	+.25-.25	+.25-.25
6 INCHES TO 6 FEET	+1.00-.00		+.50-.50	+.50-.50	+.50-.50
OVER 6 FEET	+2.00-.00				

MANNED SPACECRAFT CENTER HOUSTON, TEXAS | SIZE A | 1900994
SCALE-NONE | REV LTR G | SHEET 4 OF 106

MIL 2084 4-63

PENNANT LIST OF MATERIALS

NOTE	ITEM	QTY	PART NO	DESCRIPTION
	33	3	1016369-288	OUTER MALE BODY
	34	3	1016369-588	HYRING
	35	3	1016369-388	CONTACT, INNER FEMALE
	36	1	1900994-008	TUBING, MODIFIED POLYVINYL CHLORIDE, FLEXIBLE SHRINK-FIT PER 1016197-007 4.5 FT TOTAL LENGTH
	37	1	1016369-140	CONNECTOR
	38	1	1900994-~~008~~ 009	ZIPPER TUBING ND1002155, TYPE 1, PLASTIC FLEXIBLE 1.50 IN. DIA, 5 IN. TOT. LENGTH

MANNED SPACECRAFT CENTER HOUSTON, TEXAS | SIZE A | 1900994
SCALE-NONE | REV LTR ~~G~~ H | SHEET 7 OF 106

MIL 2084 4-63

CONDUCTOR NUMBER	INDIVIDUAL LENGTH ITEM NO.	[2]	FROM CUT WIRE OR SHIELD STRIP WIRE OR JACKET CIRCUIT POINT	[2]	TIN	[2]	TERMINATION SPEC. [1] ITEM NO.				NO.	TO CUT WIRE OR SHIELD STRIP WIRE OR JACKET CIRCUIT POINT	[2]	TIN	[2]	TERMINATION SPEC [1] ITEM NO.				NO.
A 5A	4		SHLD A5		37N							E1		37N						
A 5L			P1-H*		22N		23					P2- 10		22N		18				
A 5R			P1-G*		22N		23					P2- 9		22N		18				
A 6	3			280		250	11	12		5			280		250	A	15		7A	
							A	15												
A 6A	4		SHLD A6		37N							E1		37N						
A 6L			P1-J*		22N		23					P2- 25		22N		18				
A 6R			P1-I*		22N		23					P2- 12		22N		18				
A 6Y			P1-K*		22N		23					P2- 11		22N		18				
A 7			DELETED																	
			DELETED																	
A 7A			DELETED																	
A 7L			DELETED																	
A 7R			DELETED																	
A 8	1			280		250	9	10		5			280		250	A	13		7A	
							A	13												
A 8A	4		SHLD A8		37N							E2		37N						
A 8L			P1-Q*		22N		23					P2- 66		22N		18				

[1] THE STD CONDUCTOR TERMINATION FIGURES ARE PER
[2] DIMENSIONS ARE IN INCHES AND TWO PLACE DECIMALS.

MANNED SPACECRAFT CENTER HOUSTON, TEXAS | SIZE A | 1900994
SCALE - NONE | REV LTR G | SHEET 9 OF 18

MIL 2085 - 4-63 WIR

CONDUCTOR NUMBER	INDIVIDUAL LENGTH ITEM NO.	[2]	FROM CUT WIRE OR SHIELD STRIP WIRE OR JACKET CIRCUIT POINT	[2]	TIN	[2]	TERMINATION SPEC. [1] ITEM NO.				NO.	TO CUT WIRE OR SHIELD STRIP WIRE OR JACKET CIRCUIT POINT	[2]	TIN	[2]	TERMINATION SPEC [1] ITEM NO.				NO.
A 8R			P1-P*		22N		23					P2- 56		22N		18				
A 9			DELETED																	
			DELETED																	
A 9A			DELETED																	
A 9L			DELETED																	
A 9R			DELETED																	
A 10	1			330		300	9	10		5			330		300	A	13		7A	
							A	13												
A 10A	4		SHLD A10		37N							E2		37N						
A 10L			P1-V*		22N		23					P2- 87		22N		18				
A 10R			P1-U*		22N		23					P2-101		22N		18				
A 11			DELETED																	
			DELETED																	
A 11A			DELETED																	
A 11W			DELETED																	
A 12	1			330		300	9	10		5			330		300	A	13		7A	
							A	13												
A 12A	4		SHLD A12		37N							E2		37N						

[1] THE STD CONDUCTOR TERMINATION FIGURES ARE PER
[2] DIMENSIONS ARE IN INCHES AND TWO PLACE DECIMALS.

MANNED SPACECRAFT CENTER HOUSTON, TEXAS | SIZE A | 1900994
SCALE - NONE | REV LTR G | SHEET 10 OF 18

MIL 2085 - 4-63 WIR

CONDUCTOR NUMBER	INDIVIDUAL LENGTH ITEM NO.	[2]	FROM CUT WIRE OR SHIELD STRIP WIRE OR JACKET CIRCUIT POINT	[2]	TIN	[2]	TERMINATION SPEC. [1] ITEM NO.				NO.	TO CUT WIRE OR SHIELD STRIP WIRE OR JACKET CIRCUIT POINT	[2]	TIN	[2]	TERMINATION SPEC [1] ITEM NO.				NO.
A 1	1			230		200	9	10		5			230		200	A	13		7A	
							A	13												
A 1A	4		SHLD A1		37N							E1		37N						
A 1L			P1-Z		22N		23					P2- 14		22N		18				
A 1R			P1-Y		22N		23					P2- 1		22N		18				
A 2	1			230		200	9	10		5			230		200	A	13		7A	
							A	13												
A 2A	4		SHLD A2		37N							E1		37N						
A 2L			P1-C*		22N		23					P2- 18		22N		18				
A 2R			P1-B*		22N		23					P2- 17		22N		18				
A 3	4		P1-D*		22N		23					P2- 4		22N		18				
A 4	1			230		200	9	10		5			230		200	A	13		7A	
							A	13												
A 4A	4		SHLD A4		37N							E1		37N						
A 4L			P1-F*		22N		23					P2- 22		22N		18				
A 4R			P1-E*		22N		23					P2- 8		22N		18				
A 5	1			230		200	9	10		5			230		200	A	13		7A	
							A	13												

[1] THE STD CONDUCTOR TERMINATION FIGURES ARE PER
[2] DIMENSIONS ARE IN INCHES AND TWO PLACE DECIMALS.

MANNED SPACECRAFT CENTER HOUSTON, TEXAS | SIZE A | 1900994
SCALE - NONE | REV LTR G | SHEET 8 OF 18

MIL 2085 - 4-63 WIR

CONDUCTOR NUMBER	INDIVIDUAL LENGTH ITEM NO.	[2]	FROM CUT WIRE OR SHIELD STRIP WIRE OR JACKET CIRCUIT POINT	[2]	TIN	[2]	TERMINATION SPEC. [1] ITEM NO.				NO.	TO CUT WIRE OR SHIELD STRIP WIRE OR JACKET CIRCUIT POINT	[2]	TIN	[2]	TERMINATION SPEC [1] ITEM NO.				NO.
A 12L			P1-X*		22N		23					P2- 86		22N		18				
A 12R			P1-W*		22N		23					P2-100		22N		18				
A 13			DELETED																	
			DELETED																	
A 13A			DELETED																	
A 13L			DELETED																	
A 13R			DELETED																	
A 13Y			DELETED																	
A 14	1			380		350	9	10					380		350	A	13		7A	
							A	13												
A 14A	4		SHLD A14		37N							E3		37N						
A 14L			P1-DD		22N		23					P2- 60		22N		18				
A 14R			P1-CC		22N		23					P2- 50		22N		18				
A 15	1			380		350	9	10		5			380		350	A	13		7A	
							A	13												
A 15A	4		SHLD A15		37N							E3		37N						
A 15L			P1-FF		22N		23					P2- 2		22N		18				
A 15R			P1-EE		22N		23					P2- 3		22N		18				

[1] THE STD CONDUCTOR TERMINATION FIGURES ARE PER
[2] DIMENSIONS ARE IN INCHES AND TWO PLACE DECIMALS.

MANNED SPACECRAFT CENTER HOUSTON, TEXAS | SIZE A | 1900994
SCALE - NONE | REV LTR G | SHEET 11 OF 18

MIL 2085 - 4-63 WIR

1900994

REVISIONS					
SYM	ZONE	DESCRIPTION	CHG NO.	DATE	APPD.
G		SEE SHEET 1 FOR REVISION RECORD REDRAWN PER TDRC 15399			

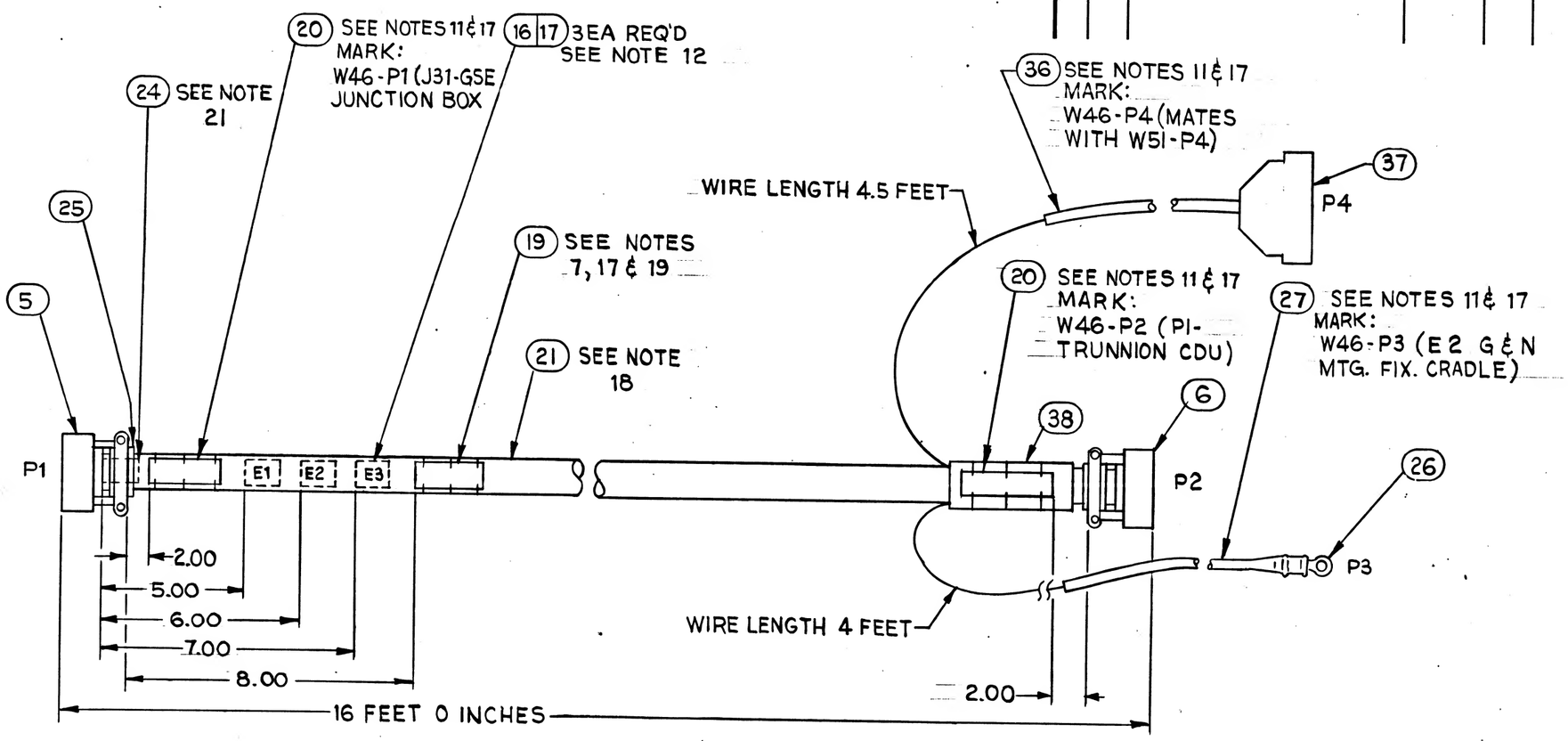

LOCATION TOLERANCE (EXCEPT LENGTH) ±.50

NEXT ASSY	USED ON
APPLICATION	

UNLESS OTHERWISE SPECIFIED DIMENSIONS ARE IN INCHES TOLERANCES ON

FRACTIONS	DECIMALS	ANGLES
+ —	+ —	+ —
— —	— —	— —

DO NOT SCALE THIS DRAWING

MATERIAL

CONTRACT NAS 9-497

AC SPARK PLUG DIVISION, GMC
MILWAUKEE, WISCONSIN

ACSP PN

DRAWN ORZEL DATE 11 NOV 63
CHECKED M. MANNING 20 NOV 63
APPROVAL N. ABRAHAM 20 NOV 63
APPROVAL J. M. Watson 15-65
NASA APPROVAL G. C. [illegible] 17 Nov 65
MIT APPROVAL W. [illegible] 27 Nov 65

MANNED SPACECRAFT CENTER
HOUSTON, TEXAS

CABLE, INTERCONNECT W46 ISS, OSS TESTING

CODE IDENT NO. | SIZE C | 1900994

SCALE NONE | SHEET 15 OF 16

MIL 1077C-P

GIV CABLE W-46 ~~F~~ 1900994

CONDUCTOR NUMBER	INDIVIDUAL LENGTH ITEM NO.	2		FROM CUT WIRE OR SHIELD STRIP WIRE OR JACKET CIRCUIT POINT	2	TIN	2	TERMINATION SPEC. 1 ITEM NO.				NO.	TO CUT WIRE OR SHIELD STRIP WIRE OR JACKET CIRCUIT POINT	2	TIN	2	TERMINATION SPEC 1 ITEM NO.				NO.
A 21	4			E1		37N							E2		37N						
A 22	4			E2		22N							E3		37N						
A 23	4			P1-D		22N		23					P1-E		22N		23				
A 24	28				280		250	29	30		5			56			A	31			
								A	31												
A 24A	4			SHLD A24		37N							P2- 67		10N		18				
~~A 24X~~ ~~A 24B~~				SHLD A24									P4-D SHLD		N	25	33	34			
~~A 24E~~ ~~A 24W~~				P2- 68		10N		18					P4-D		18		35				
A 25	28				380		350	29	30		5			56			A	31			
								A	31												
A 25A	4			SHLD A25		37N							P2- 92		10N		18				
~~A 25X~~ ~~A 25B~~				SHLD A25									P4-E SHLD		N	25	33	34			
~~A 25E~~ ~~A 25W~~				P2-106		10N		18					P4-E		18		35				
A 26	3				380		350	A	15		7A			380		350	11	12		5	
																	A	15			
A 26B	4			SHLD A26		37N							P4-J		22N						
A 26L				P2-108		10N							P4-B		22N			32			
A 26R				P2-107		10N							P4-F		22N			32			

1 THE STD CONDUCTOR TERMINATION FIGURES ARE PER
2 DIMENSIONS ARE IN INCHES AND TWO PLACE DECIMALS.

MANNED SPACECRAFT CENTER HOUSTON, TEXAS | SIZE A | 1900994 | SCALE - NONE | REV LTR ~~G~~ H | SHEET 13 OF 19

MIL 2085 - 4-63 WIR

GIV CABLE W-46 ~~F~~ 1900994

CONDUCTOR NUMBER	INDIVIDUAL LENGTH ITEM NO.	2		FROM CUT WIRE OR SHIELD STRIP WIRE OR JACKET CIRCUIT POINT	2	TIN	2	TERMINATION SPEC. 1 ITEM NO.				NO.	TO CUT WIRE OR SHIELD STRIP WIRE OR JACKET CIRCUIT POINT	2	TIN	2	TERMINATION SPEC 1 ITEM NO.				NO.
A 26Y				P2- 94		10N							P4-J		22N			32			
A 27	28				380		350	29	30			5		56			A	31			
								A	31												
A 27A	4			SHLD A27		37N							P2- 90		10N		18				
~~A 27X~~ ~~A 27B~~				SHLD A27									P4-M SHLD		N	25	33	34			
~~A 27E~~ ~~A 27W~~				P2-104		10N		18					P4-M		18		35				
A 28	4			P2- 89		10N		18					P4-H		22N			32			

1 THE STD CONDUCTOR TERMINATION FIGURES ARE PER
2 DIMENSIONS ARE IN INCHES AND TWO PLACE DECIMALS.

MANNED SPACECRAFT CENTER HOUSTON, TEXAS | SIZE A | 1900994 | SCALE - NONE | REV LTR ~~F~~ H | SHEET 14 OF 19

MIL 2085 - 4-63 WIR

GIV CABLE W-46 G 1900994

CONDUCTOR NUMBER	INDIVIDUAL LENGTH ITEM NO.	2		FROM CUT WIRE OR SHIELD STRIP WIRE OR JACKET CIRCUIT POINT	2	TIN	2	TERMINATION SPEC. 1 ITEM NO.				NO.	TO CUT WIRE OR SHIELD STRIP WIRE OR JACKET CIRCUIT POINT	2	TIN	2	TERMINATION SPEC 1 ITEM NO.				NO.
A 16				DELETED																	
				DELETED																	
A 16A				DELETED																	
A 16L				DELETED																	
A 16R				DELETED																	
A 17	3				380		350	11	12		5			380		350	A	15		7A	
								A	15												
A 17A	4			SHLD A17		37N							E3		37						
A 17L				P1-LL		22N		23					P2- 31		22N		18				
A 17R				P1-KK		22N		23					P2- 32		22N		18				
A 17Y				P1-MM		22N		23					P2- 43		22N		18				
A 18	1				430		400	9	10		5			430		400	A	13		7A	
								A	13												
A 18A	4			SHLD A18		37N							E3		37N						
A 18L				P1-PP		22N		23					P2- 29		22N		18				
A 18R				P1-NN		22N		23					P2- 28		22N		18				
A 19	4			P3- 1		25N		26					P2- 41		22N		18				
A 20	4			P1-B		22N		23					E1		37N						

1 THE STD CONDUCTOR TERMINATION FIGURES ARE PER
2 DIMENSIONS ARE IN INCHES AND TWO PLACE DECIMALS.

MANNED SPACECRAFT CENTER HOUSTON, TEXAS | SIZE A | 1900994 | SCALE - NONE | REV LTR G | SHEET 12 OF 19

MIL 2085 - 4-63 WIR

GENERAL NOTES

NOTES

1 SEE CONDUCTOR CHART

2 SEE CONDUCTOR CHART

3 INTERPRET DRAWING IN ACCORDANCE WITH STANDARDS PRESCRIBED BY MIL-D-70327.

4 MARK CONDUCTOR IDENTIFICATION ON SINGLE CONDUCTORS PER ND1002019 OMITTING ALL SUFFIX LETTERS EXCEPT A AND B.

5 SPACING OF CONDUCTOR IDENTIFICATION SHALL BE EVERY 15 INCHES MAX AND AT EACH TERMINATION.

6 SPIRALLING OF THE MARKING IS ALLOWED.

7 IDENTIFY USING DRAWING NO. AND REVISION LETTER PER MIL-STD-130 (ES-267). .12 INCH HIGH CHARACTERS BLACK.

8 Y OR N IN TINNED COLUMN INDICATES YES OR NO.

9 A LETTER WITH AN ASTERISK SUFFIX, INDICATES A LOWER CASE LETTER.

10 VENDOR ITEM - SEE SPECIFICATION CONTROL DRAWING.

11 MARK IDENTIFICATION BAND WITH REFERENCE DESIGNATION AS NOTED .12 INCH HIGH COLOR BLACK, HOT IMPRESSION STAMPING PER ND1002019. CENTRALIZE.

MANNED SPACECRAFT CENTER HOUSTON, TEXAS	SIZE A	1900994	
SCALE-NONE	REV LTR +		SHEET 2 OF 13

MIL 2084 4-63

GENERAL NOTES

NOTES

12 MARK SLEEVING WITH REFERENCE DESIGNATIONS AS SHOWN .12 INCH HIGH, COLOR BLACK PER ND1002019.

13 MARK SLEEVING OF MULTI-CONDUCTORS WITH THE CONDUCTOR NUMBER .12 INCH HIGH, COLOR BLACK, PER ND1002019 WHEN SLEEVING ITEM NUMBERS FOLLOW AN A OR T IN THE ACCESSORIES ITEM NUMBER FIELD.

14 A OR T PREFIX IN THE ACCESSORIES ITEM NUMBER COLUMN INDICATES THE READING POSITION AWAY FROM TERMINATION OR TOWARD TERMINATION RESPECTIVELY, OF THE WIRE MARKER SLEEVE.

15 THE SUFFIX LETTER OF A CONDUCTOR IDENTIFICATION NUMBER INDICATES CONDUCTOR SHIELDING, COLOR, OR MARKING.
- A - FROM END SHIELD
- L - WHITE WITH BLUE TRACER
- R - WHITE WITH RED TRACER
- Y - WHITE WITH YELLOW TRACER

16 ASSEMBLE CONTACTS IN ALL CONNECTOR GROMMET HOLES

17 SECURE TO CABLE USING ITEM 22. MARKING TO READ AWAY FROM CONNECTOR.

18 SEAL ZIPPER TUBING PER ND 1002153.

19 SERIALIZE PER ND 1002023.

20 THIS ITEM FURNISHED WITH ITEM 5

MANNED SPACECRAFT CENTER HOUSTON, TEXAS	SIZE A	1900994	
SCALE-NONE	REV LTR +		SHEET 3 OF 13

MIL 2084 4-63

APPLICATION		REVISIONS			
NEXT ASSY	USED ON	SYM	DESCRIPTION	DATE	APPROVAL
1901308	1900005-011		-		

FOR INFORMATION ONLY

CLASS B RELEASE TDR No. 05653 DATE 1/7/69

REV	+	+	+	+	+	+	+	+	+	+	+	+
SHEET	1	2	3	4	5	6	7	8	9	10	11	12/13

REV STATUS + OF SHEETS 13

AC SPARK PLUG DIVISION, GMC
MILWAUKEE, WISCONSIN

ACSP PN

DRAWN Orgel DATE 11 NOV 63
CHECKED Fleming DATE 20 NOV 63
APPROVAL D. Bina 20 NOV 63
APPROVAL J. Adkinson 11/26

MANNED SPACECRAFT CENTER HOUSTON, TEXAS

CABLE, INTERCONNECT W46
ISS, OSS TESTING

CODE IDENT NO. SIZE A 1900994 REV +

NASA APPROVAL
MIT APPROVAL
CONTRACT NAS 9-497 SCALE SHEET 1 OF 13

GENERAL NOTES

TOLERANCE CHART, UNLESS OTHERWISE SPECIFIED ---

APPLICABLE LENGTH FOR WIRE OR CABLE, STRIP WIRE, STRIP JACKET, CUT WIRE OR CUT SHIELD	TOLERANCE				
	WIRE OR CABLE	STRIP WIRE	STRIP JACKET	CUT WIRE	CUT SHIELD
UNDER 1 INCH	+ .06-.00	+.03-.00	+.06-.06	+.06-.06	+.06-.06
1 INCH TO 6 INCHES	+ .50-.00	+.06-.00	+.25-.25	+.25-.25	+.25-.25
6 INCHES TO 6 FEET	+1.00-.00		+.50-.50	+.50-.50	+.50-.50
OVER 6 FEET	+2.00-.00				

MANNED SPACECRAFT CENTER HOUSTON, TEXAS	SIZE A	1900994	
SCALE-NONE	REV LTR +		SHEET 4 OF 13

MIL 2084 4-63

INCHES 0 1 2
PHOTOGRAPHIC SCALE ONLY

LIST OF MATERIAL

SEE NOTE	ITEM	REQ'D	PART NUMBER	DESCRIPTION
10	16	3	1010490-258	INSULATION, SLEEVING ELECT.
10	17	3	1016006-002	SPLICE REDUCER
10	18	108	1010464-2	CONNECTOR CONTACTS, SOCKETS
10	19	1	1016128-011	BAND IDENTIFICATION
10	20	2	1016128-041	BAND IDENTIFICATION
21	21	1	1900994-005	ZIPPER TUBING ND 1002155, TYPE 1, PLASTIC FLEXIBLE 9/16 DIA 16 FT TOTAL LENGTH
	22	AR	MIL-T-713	LACING TAPE, TYPE P, CLASS 2, BLACK (ES 2732 NO.18)
20	23	-	-	CONNECTOR CONTACTS, PIN

MANNED SPACECRAFT CENTER HOUSTON, TEXAS	SIZE A	1900994
SCALE - NONE	REV LTR +	SHEET 6 OF 13

MIL 2084 4-63

CONDUCTOR NUMBER	INDIVIDUAL LENGTH ITEM NO.	[2]		FROM CUT WIRE OR SHIELD STRIP WIRE OR JACKET CIRCUIT POINT	[2]	TIN	[2]	TERMINATION SPEC. [1] ITEM NO.			NO.	TO CUT WIRE OR SHIELD STRIP WIRE OR JACKET CIRCUIT POINT	[2]	TIN	[2]	TERMINATION SPEC [1] ITEM NO.			NO.
A 1	1				230		200	9	10	5			230		200	A	13	7A	
								A	13										
A 1A	4			SHLD A1	37N							E1	37N						
A 1L				P1-Z	22N			23				P2- 14	22N			18			
A 1R				P1-Y	22N			23				P2- 1	22N			18			
A 2	1				230		200	9	10	5			230		200	A	13	7A	
								A	13										
A 2A	4			SHLD A2	37N							E1	37N						
A 2L				P1-C*	22N			23				P2- 18	22N			18			
A 2R				P1-B*	22N			23				P2- 17	22N			18			
A 3	4			P1-D*	22N			23				P2- 4	22N			18			
A 4	1				230		200	9	10	5			230		200	A	13	7A	
								A	13										
A 4A	4			SHLD A4	37N							E1	37N						
A 4L				P1-F*	22N			23				P2- 22	22N			18			
A 4R				P1-E*	22N			23				P2- 8	22N			18			
A 5	1				230		200	9	10	5			230		200	A	13	7A	
								A	13										

[1] THE STD CONDUCTOR TERMINATION FIGURES ARE PER
[2] DIMENSIONS ARE IN INCHES AND TWO PLACE DECIMALS.

MANNED SPACECRAFT CENTER HOUSTON, TEXAS	SIZE A	1900994
SCALE - NONE	REV LTR +	SHEET 7 OF 13

MIL 2085 - 4-63 WIR

LIST OF MATERIAL

SEE NOTE	ITEM	REQ'D	PART NUMBER	DESCRIPTION
	1	1	1900994-001	WIRE ND 1002181 TYPE 2 CLASS 4 WHT JKT 22 AWG WHT/BLU WHT/RED 208 FT TOTAL LENGTH
	2	1	-002	WIRE ND 1002181 TYPE 1 CLASS 4 WHT JKT 22 AWG WHITE 16 FT TOTAL LENGTH
	3	1	-003	WIRE ND 1002181 TYPE 3 CLASS 4 WHT JKT 22 AWG WHT/BLU WHT/RED WHT/YEL 48 FT TOTAL LENGTH
	4	1	-004	WIRE ND 1002181 TYPE 1 CLASS 1, 22 AWG, WHITE 75 FT TOTAL LENGTH
16	5	1	MS3126F-24-61PZ	(1897047-614) CONNECTOR PLUG
16,10	6	1	1010411-2	CONNECTOR PLUG
10	7	1	1000243-003	FERRULE, ELEC. COND.
10	8	1	1000242-002	FERRULE, ELEC. COND.
10	9	13	1000243-008	FERRULE, ELEC. COND.
10	10	13	1000242-007	FERRULE, ELEC. COND.
10	11	3	1000243-011	FERRULE, ELEC. COND.
10	12	3	1000242-011	FERRULE, ELEC. COND.
10	13	27	1010490-198	INSULATION, SLEEVING ELECT.
10	14	1	1010490-200	INSULATION, SLEEVING ELECT.
10	15	6	1010490-196	INSULATION, SLEEVING ELECT.

MANNED SPACECRAFT CENTER HOUSTON, TEXAS	SIZE A	1900994
SCALE - NONE	REV LTR +	SHEET 5 OF 13

MIL 2084 4-63

CONDUCTOR NUMBER	INDIVIDUAL LENGTH ITEM NO.	[2]		FROM CUT WIRE OR SHIELD STRIP WIRE OR JACKET CIRCUIT POINT	[2]	TIN	[2]	TERMINATION SPEC. [1] ITEM NO.			NO.	TO CUT WIRE OR SHIELD STRIP WIRE OR JACKET CIRCUIT POINT	[2]	TIN	[2]	TERMINATION SPEC [1] ITEM NO.			NO.
A 5A	4			SHLD A5	37N							E1	37N						
A 5L				P1-H*	22N			23				P2- 10	22N			18			
A 5R				P1-G*	22N			23				P2- 9	22N			18			
A 6	3				280		250	11	12	5			280		250	A	15	7A	
								A	15										
A 6A	4			SHLD A6	37N							E1	37N						
A 6L				P1-J*	22N			23				P2- 25	22N			18			
A 6R				P1-I*	22N			23				P2- 12	22N			18			
A 6Y				P1-K*	22N			23				P2- 11	22N			18			
A 7	1				280		250	9	10	5			280		250	A	13	7A	
								A	13										
A 7A	4			SHLD A7	37N							E1	37N						
A 7L				P1-N*	22N			23				P2- 68	22N			18			
A 7R				P1-M*	22N			23				P2- 67	22N			18			
A 8	1				280		250	9	10	5			280		250	A	13	7A	
								A	13										
A 8A	4			SHLD A8	37N							E2	37N						
A 8L				P1-O*	22N			23				P2- 66	22N			18			

[1] THE STD CONDUCTOR TERMINATION FIGURES ARE PER
[2] DIMENSIONS ARE IN INCHES AND TWO PLACE DECIMALS.

MANNED SPACECRAFT CENTER HOUSTON, TEXAS	SIZE A	1900994
SCALE - NONE	REV LTR +	SHEET 8 OF 13

MIL 2085 - 4-63 WIR

INCHES 0 1 2
PHOTOGRAPHIC SCALE ONLY

CONDUCTOR NUMBER	INDIVIDUAL LENGTH ITEM NO.		FROM CUT WIRE OR SHIELD STRIP WIRE OR JACKET CIRCUIT POINT		TIN		TERMINATION SPEC. ITEM NO.				NO.	TO CUT WIRE OR SHIELD STRIP WIRE OR JACKET CIRCUIT POINT		TIN		TERMINATION SPEC ITEM NO.				NO.
A 12L			P1-X*	22	N		23					P2- 86	22	N		18				
A 12R			P1-W*	22	N		23					P2-100	22	N		18				
A 13	3			330		300	11	12		5			330		300	A	15		7A	
							A	15												
A 13A	4		SHLD A13	37	N							E2	37	N						
A 13L			P1-Z*	22	N		23					P2-108	22	N		18				
A 13R			P1-Y*	22	N		23					P2-107	22	N		18				
A 13Y			P1-AA	22	N		23					P2- 94	22	N		18				
A 14	1			380		350	9	10					380		350	A	13		7A	
							A	13												
A 14A	4		SHLD A14	37	N							E3	37	N						
A 14L			P1-DD	22	N		23					P2- 60	22	N		18				
A 14R			P1-CC	22	N		23					P2- 50	22	N		18				
A 15	1			380		350	9	10		5			380		350	A	13		7A	
							A	13												
A 15A	4		SHLD A15	37	N							E3	37	N						
A 15L			P1-FF	22	N		23					P2- 2	22	N		18				
A 15R			P1-EE	22	N		23					P2- 3	22	N		18				

1 THE STD CONDUCTOR TERMINATION FIGURES ARE PER
2 DIMENSIONS ARE IN INCHES AND TWO PLACE DECIMALS.

MANNED SPACECRAFT CENTER HOUSTON, TEXAS | SIZE A | 1900994
SCALE - NONE | REV LTR + | SHEET 10 OF 13

MIL 2085 - 4-63 WIR

CONDUCTOR NUMBER	INDIVIDUAL LENGTH ITEM NO.		FROM CUT WIRE OR SHIELD STRIP WIRE OR JACKET CIRCUIT POINT		TIN		TERMINATION SPEC. ITEM NO.				NO.	TO CUT WIRE OR SHIELD STRIP WIRE OR JACKET CIRCUIT POINT		TIN		TERMINATION SPEC ITEM NO.				NO.
A 16	1			380		350	9	10		5			380		350	A	13		7A	
							A	13												
A 16A	4		SHLD A16	37	N							E3	37	N						
A 16L			P1-JJ	22	N		23					P2- 92	22	N		18				
A 16R			P1-HH	22	N		23					P2-106	22	N		18				
A 17	3			380		350	11	12		5			380		350	A	15		7A	
							A	15												
A 17A	4		SHLD A17	37	N							E3	37							
A 17L			P1-LL	22	N		23					P2- 31	22	N		18				
A 17R			P1-KK	22	N		23					P2- 32	22	N		18				
A 17Y			P1-MM	22	N		23					P2- 43	22	N		18				
A 18	1			430		400	9	10		5			430		400	A	13		7A	
							A	13												
A 18A	4		SHLD A18	37	N							E3	37	N						
A 18L			P1-PP	22	N		23					P2- 29	22	N		18				
A 18R			P1-NN	22	N		23					P2- 28	22	N		18				
A 19	4		P1-A	22	N		23					P2- 41	22	N		18				
A 20	4		P1-B	22	N		23					E1	37	N						

1 THE STD CONDUCTOR TERMINATION FIGURES ARE PER
2 DIMENSIONS ARE IN INCHES AND TWO PLACE DECIMALS.

MANNED SPACECRAFT CENTER HOUSTON, TEXAS | SIZE A | 1900994
SCALE - NONE | REV LTR + | SHEET 11 OF 13

MIL 2085 - 4-63 WIR

CONDUCTOR NUMBER	INDIVIDUAL LENGTH ITEM NO.		FROM CUT WIRE OR SHIELD STRIP WIRE OR JACKET CIRCUIT POINT		TIN		TERMINATION SPEC. ITEM NO.				NO.	TO CUT WIRE OR SHIELD STRIP WIRE OR JACKET CIRCUIT POINT		TIN		TERMINATION SPEC ITEM NO.				NO.
A 8R			P1-P*	22	N		23					P2- 56	22	N		18				
A 9	1			280		250	9	10		5			280		250	A	13		7A	
							A	13												
A 9A	4		SHLD A9	37	N							E2	37	N						
A 9L			P1-S*	22	N		23					P2- 90	22	N		18				
A 9R			P1-R*	22	N		23					P2-104	22	N		18				
A 10	1			330		300	9	10		5			330		300	A	13		7A	
							A	13												
A 10A	4		SHLD A10	37	N							E2	37	N						
A 10L			P1-V*	22	N		23					P2- 87	22	N		18				
A 10R			P1-U*	22	N		23					P2-101	22	N		18				
A 11	2			330		300	7	8		5			330		300	A	14		7A	
							A	13												
A 11A	4		SHLD A11	37	N							E2	37	N						
A 11W			P1-T*	22	N		23					P2- 89	22	N		18				
A 12	1			330		300	9	10		5			330		300	A	13		7A	
							A	13												
A 12A	4		SHLD A12	37	N							E2	37	N						

1 THE STD CONDUCTOR TERMINATION FIGURES ARE PER
2 DIMENSIONS ARE IN INCHES AND TWO PLACE DECIMALS.

MANNED SPACECRAFT CENTER HOUSTON, TEXAS | SIZE A | 1900994
SCALE - NONE | REV LTR + | SHEET 9 OF 13

MIL 2085 - 4-63 WIR

CONDUCTOR NUMBER	INDIVIDUAL LENGTH ITEM NO.		FROM CUT WIRE OR SHIELD STRIP WIRE OR JACKET CIRCUIT POINT		TIN		TERMINATION SPEC. ITEM NO.				NO.	TO CUT WIRE OR SHIELD STRIP WIRE OR JACKET CIRCUIT POINT		TIN		TERMINATION SPEC ITEM NO.				NO.
A 21	4		E1	37	N							E2	37	N						
A 22	4		E2	22	N							E3	37	N						

1 THE STD CONDUCTOR TERMINATION FIGURES ARE PER
2 DIMENSIONS ARE IN INCHES AND TWO PLACE DECIMALS.

MANNED SPACECRAFT CENTER HOUSTON, TEXAS | SIZE A | 1900994
SCALE - NONE | REV LTR + | SHEET 12 OF 13

MIL 2085 - 4-63 WIR

INCHES 0 1 2
PHOTOGRAPHIC SCALE ONLY

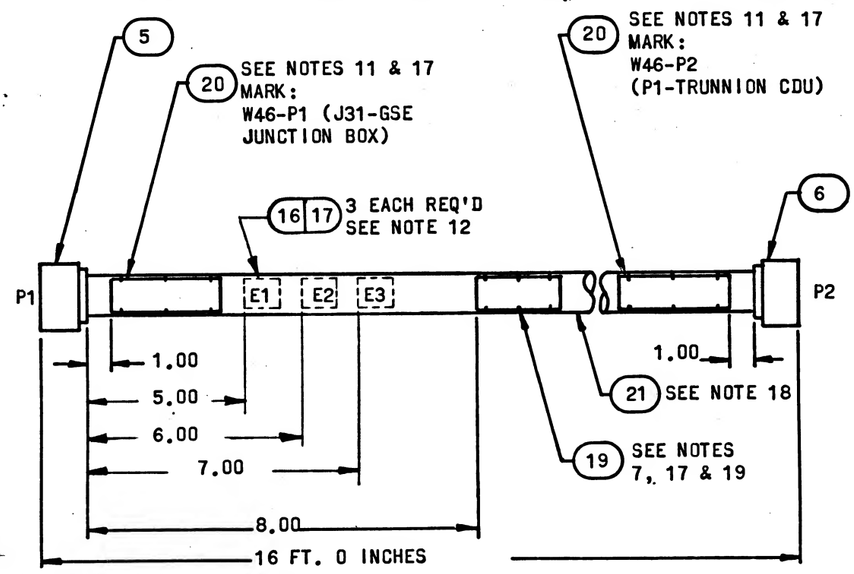

LOCATION TOLERANCE
(EXCEPT LENGTH):
+.50
-.50

MANNED SPACECRAFT CENTER HOUSTON, TEXAS	SIZE A	1900994	
SCALE-NONE	REV LTR +		SHEET 13 OF 13

MIL 2084 4-63

PHOTOGRAPHIC SCALE ONLY
0 INCHES 2

1900995 1B1

NOTES:
1. SECURE ITEM 3 USING ITEM 6.

PART NO.	QUAN	DESCRIPTION	ITEM NO
1900098	1	COOLANT SUPPLY	1
1900015-061	2	HANDLE ASSY	2
1015831-253	8	SCREW-FLAT HEAD	3
1901304-219	1	NAMEPLATE	4
AN535-0-4	4	DRIVE SCREWS	5
MIL-S-40083C130	AR	(ES-2544-5) SEALING COMPOUND	6

REVISIONS 04810

SYM	DESCRIPTION	CHG NO.	DATE	APPD.
A	CHANGE IN ACCORDANCE WITH CM-193629 TDRR 09130	-	8-JAN-64	M.G.
B	CHANGE IN ACCORDANCE WITH CM-193930 TDRR 09131	—	7 JAN 64	M.G.

FOR INFORMATION ONLY

CLASS B RELEASE TDR No. 04810 DATE 26 Nov 1963

1900145-011	
NEXT ASSY	USED ON
APPLICATION	

UNLESS OTHERWISE SPECIFIED
DIMENSIONS ARE IN INCHES
TOLERANCES ON

FRACTIONS	DECIMALS	ANGLES
+ —	+ —	+ —
- —	- —	- —

DO NOT SCALE THIS DRAWING

MATERIAL ——

CONTRACT NAS 9-497

AC SPARK PLUG DIVISION, GMC
MILWAUKEE, WISCONSIN

ACSP PN

DRAWN J. Schwinger DATE 8 NOV 63
CHECKED W. Duell 8 Nov. 63
APPROVAL Jos. Van Den Kieboom
APPROVAL L. Gedeman 11/22/63
NASA APPROVAL W. J. Kehm 11-26-63
MIT APPROVAL W. Kupfer 26 Nov 63

MANNED
SPACECRAFT CENTER
HOUSTON, TEXAS

COOLANT SUPPLY ASSY

CODE IDENT NO. | SIZE B | 1900995

SCALE — | SHEET 1 OF 1

MIL 1077B—P

▼ 1 2 1 9660061 1

NOTES:
1. SECURE ITEM 3 USING ITEM 6.

PART NO.	QUAN	DESCRIPTION	ITEM NO
1900098	1	COOLANT SUPPLY	1
1900015-061	2	HANDLE ASSY	2
AN507C832R12	8	(1897003-568) SCREW, FL. HD.	3
1901304-219	1	NAMEPLATE	4
AN535-0-4	4	DRIVE SCREWS	5
MIL-S-40083C130	AR	(ES-25445) SEALING COMPOUND	6

REVISIONS 04810

SYM	DESCRIPTION	CHG NO.	DATE	APPD.
A	CHANGE IN ACCORDANCE WITH CM-193629 TDRR 09130	-	8-JAN-64	M.G.
B	CHANGE IN ACCORDANCE WITH CM-193930 TDRR 09131	—	17-JAN-64	M.G.
C	REVISED PER TDRR 10873	—	20 JUL 64	R.J.F.

FOR INFORMATION ONLY

CLASS B RELEASE TDR No. 04810 DATE 26 Nov 1963

1900145-011	
NEXT ASSY	USED ON
APPLICATION	

UNLESS OTHERWISE SPECIFIED
DIMENSIONS ARE IN INCHES
TOLERANCES ON

FRACTIONS	DECIMALS	ANGLES
+ —	+ —	+ —
- —	- —	- —

DO NOT SCALE THIS DRAWING

MATERIAL ——

CONTRACT NAS 9-497

AC SPARK PLUG DIVISION, GMC
MILWAUKEE, WISCONSIN

ACSP. PN

DRAWN J. Kilvinger DATE 8 NOV 63
CHECKED W. Snell 8 Nov. 63
APPROVAL M. Van Den Kieboom
APPROVAL L. Gedeman 11/22/63
NASA APPROVAL W. J. Rhine 11-26-63
MIT APPROVAL W. Kupfer 26 Nov 63

MANNED SPACECRAFT CENTER
HOUSTON, TEXAS

COOLANT SUPPLY ASSY

CODE IDENT NO. | SIZE B | 1900995

SCALE — | SHEET 1 OF 1

MIL 1077B—P

NOTES:
1. SECURE ITEM 3 USING ITEM 6.

PART NO.	QUAN	DESCRIPTION	ITEM NO
1900098	1	COOLANT SUPPLY	1
1900015-061	2	HANDLE ASSY	2
AN507C832R12	8	(1897003-568) SCREW, FL.HD.	3
1901304-219	1	NAMEPLATE	4
AN535-0-4	4	DRIVE SCREWS	5
MIL-S-40083C130	AR	(ES-2544-5) SEALING COMPOUND	6

REVISIONS 04810

SYM	DESCRIPTION	CHG NO.	DATE	APPD.
A	CHANGE IN ACCORDANCE WITH CM-193629 TDRR 09130	-	8-JAN-64	N.G.
B	CHANGE IN ACCORDANCE WITH CM-193930 TDRR 09131	—	13-JAN-64	N.G.
C	REVISED PER TDRR 10873 TDRR 10873	—	20 JUL 64	R.J.F.
D	REPLACED WITH CHANGE BY REV "E" PER TDRR 12278	—	5 AUG 64	JMP

FOR INFORMATION ONLY

CLASS B RELEASE TDR No. 04810 DATE 26 Nov 1963

(D) REPLACED WITH CHANGE BY REV "E"

1900145-011	
NEXT ASSY	USED ON
APPLICATION	

UNLESS OTHERWISE SPECIFIED
DIMENSIONS ARE IN INCHES
TOLERANCES ON

FRACTIONS	DECIMALS	ANGLES
+ —	+ —	+ —
— —	— —	— —

DO NOT SCALE THIS DRAWING

MATERIAL ____

CONTRACT NAS 9-497

AC SPARK PLUG DIVISION, GMC
MILWAUKEE, WISCONSIN

ACSP PN

DRAWN J. Keringer DATE 8 NOV 63
CHECKED W. Dreil 8 Nov. 63
APPROVAL M. Van Den Ketoom
APPROVAL L. Gedeman 11/22/63
NASA APPROVAL W. J. Wh... 11-26-63
MIT APPROVAL W. Kuppler 26 Nov 63

MANNED
SPACECRAFT CENTER
HOUSTON, TEXAS

COOLANT SUPPLY ASSY

CODE IDENT NO. | SIZE B | 1900995

SCALE — | SHEET 1 OF 1

MIL 10778-P

NOTES:
1. INTERPRET DRAWING IN ACCORDANCE WITH STANDARDS PRESCRIBED BY MIL-D-70327.
2. MARK APPLICABLE REVISION LETTER "DRAWING REVISION LETTER ____" PER ND1002019, .12 HIGH, COLOR BLACK. CENTERALIZE .12 ABOVE (4).
3. APPLY (6) TO ITEM (3) IN ACCORDANCE WITH ND 1002211.

REVISIONS						
SYM	ZONE	DESCRIPTION	CHG NO.	DATE	APPD.	
E		REPLACES REV. "D" WITH CHANGE PER TDRR 18278				

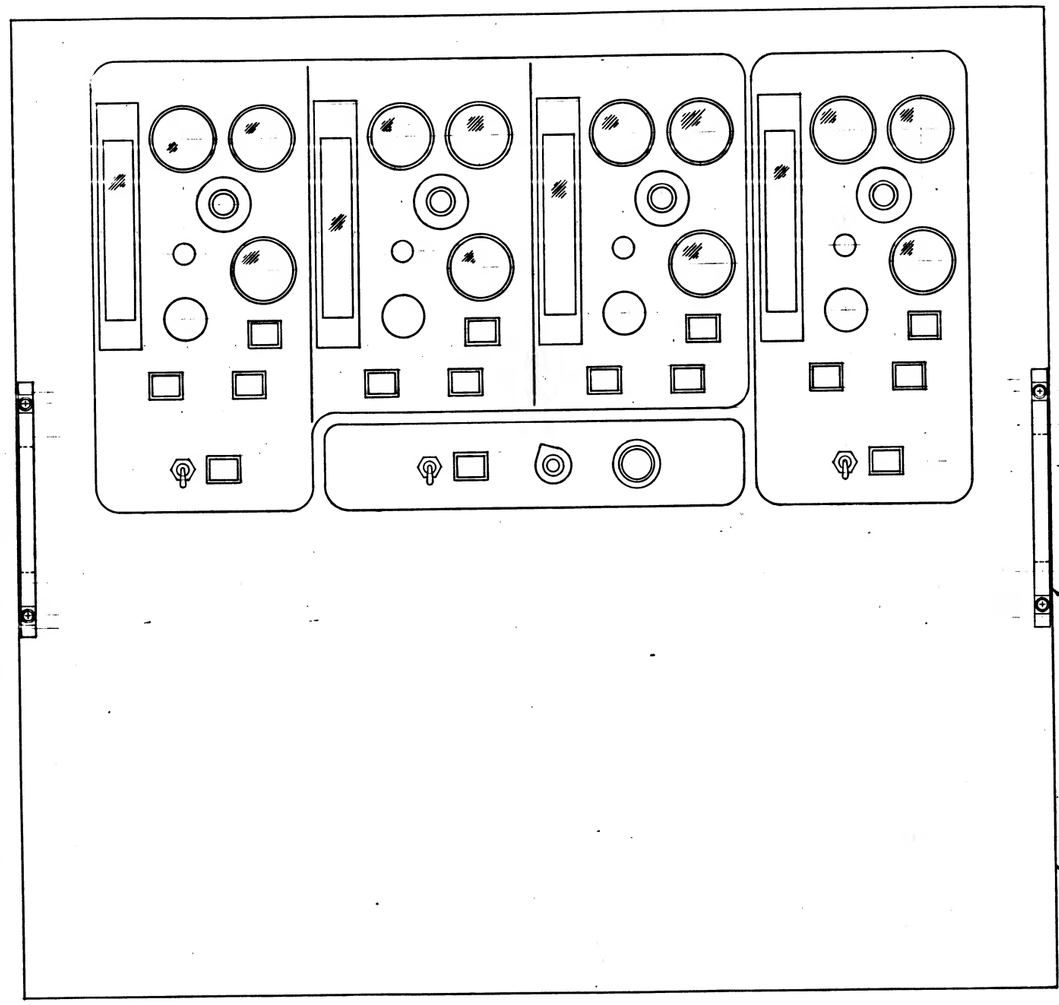

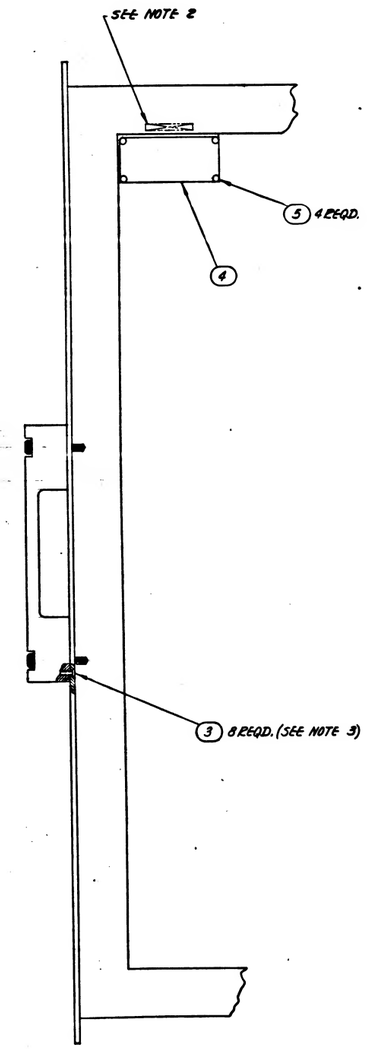

FOR INFORMATION ONLY
CLASS B RELEASE TDR No. 04810 DATE 26 NOV 68

(6) REPLACES REV "D" WITH CHANGE

ITEM NO.	NO. REQD	PART OR IDENTIFYING NUMBER	NOMENCLATURE OR DESCRIPTION
6	AR	MIL-S-22473	THD. SEALING COMPOUND (GRADE E)
5	4	AN535-0-4	(1897109-104) DRIVE SCREW
4	1	1901304-219	NAMEPLATE
3	8	1015831-253	SCREW-FLAT HEAD
2	2	1900015-061	HANDLE ASSEMBLY
1	1	1900098-011	COOLANT SUPPLY

LIST OF PARTS AND MATERIALS

UNLESS OTHERWISE SPECIFIED DIMENSIONS ARE IN INCHES TOLERANCES ON FRACTIONS ± — DECIMALS ± — ANGLES ± —
DO NOT SCALE THIS DRAWING
MATERIAL
CONTRACT NAS9-497

AC SPARK PLUG DIVISION, GMC
MILWAUKEE, WISCONSIN
ACSP PN
DRAWN 5 JUNE 68
CHECKED 5 JUNE 68
APPROVAL
APPROVAL
NASA APPROVAL
MIT APPROVAL

MANNED SPACECRAFT CENTER
HOUSTON, TEXAS

COOLANT SUPPLY ASSEMBLY

CODE IDENT NO. SIZE E 1900995
SCALE 1:2 SHEET 1 OF 1

NEXT ASSY	USED ON
1900145-011	1900145-011
APPLICATION	

MASTER

1900995

1900995

REVISIONS 04810				
SYM	DESCRIPTION	CHG NO.	DATE	APPD.

PART NO	QUAN	DESCRIPTION
1900098	1	COOLANT SUPPLY
1900015-061	2	HANDLE ASSY
1015831-257	8	SCREW-FLAT HEAD

FOR INFORMATION ONLY

CLASS B RELEASE TDR No. 04810 **DATE** 26 Nov 1963

1900145-011	
NEXT ASSY	USED ON
APPLICATION	

UNLESS OTHERWISE SPECIFIED
DIMENSIONS ARE IN INCHES
TOLERANCES ON

FRACTIONS	DECIMALS	ANGLES
+ —	+ —	+ —
− —	− —	− —

DO NOT SCALE THIS DRAWING

MATERIAL ____

CONTRACT NAS 9-497

AC SPARK PLUG DIVISION, GMC
MILWAUKEE, WISCONSIN

ACSP PN

DRAWN J. Kilbinger DATE 8 NOV 63
CHECKED W. Snell 8 Nov. 63
APPROVAL M. Van Den Kieboom
APPROVAL L. Gedeman 11/22/63
NASA APPROVAL W. J. Rhine 11-26-63
MIT APPROVAL W. Kupfer 26 Nov 63

MANNED
SPACECRAFT CENTER
HOUSTON, TEXAS

COOLANT SUPPLY ASSY

CODE IDENT NO. | SIZE B | 1900995

SCALE — | SHEET 1 OF 1

MIL 1077B—P

INCHES
0 1 2
PHOTOGRAPHIC SCALE ONLY

APPLICATION		REVISIONS			
NEXT ASSY	USED ON	SYM	DESCRIPTION	DATE	APPROVAL
1901308	1900005-011	A	CHANGE IN ACCORDANCE WITH CM 193631	4 FEB 64	JJJ J.E.G.
		B	CHANGE IN ACCORDANCE WITH CM 193723	4 FEB 64	JJJ J.E.G.
		C	CHANGE IN ACCORDANCE WITH CM 194719 09716	4 FEB 64	JJJ J.E.G.
		D	CHANGE IN ACCORDANCE WITH CM 196123 ADDED CUSTOMER DATA (Y2-69)	3 APR 64	CJL mcn
		E	CHANGE IN ACCORDANCE WITH CM 196299 REVISED PER TDR 09717	15 MAY 64	RB CP

FOR INFORMATION ONLY

CLASS B RELEASE TDR No. 05653 DATE 1/7/69

REV													
SHEET													
REV STATUS OF SHEETS	REV	E	C	C	C	C	D	C	C	C	C	D	E
	SHEET	1	2	3	4	5	6	7	8	9	10	11	12	13

AC SPARK PLUG DIVISION, GMC
MILWAUKEE, WISCONSIN

ACSP PN

MANNED SPACECRAFT CENTER
HOUSTON, TEXAS

DRAWN 12 NOV 63 DATE
CHECKED 26 NOV 63
APPROVAL 26 NOV 63
APPROVAL 1/8/64

CABLE, INTERCONNECT W49
ISS TESTING

NASA APPROVAL
MIT APPROVAL

CODE IDENT NO.	SIZE		REV
	A	1900996	E

CONTRACT

SCALE NONE

SHEET 1 OF 13

GJL CABLE W-49 C 1900996

PERMANT NOTE — GENERAL NOTES

1. SEE CONDUCTOR CHART, PERMANT NOTE 1.
2. SEE CONDUCTOR CHART, PERMANT NOTE 2.
3. INTERPRET DRAWING IN ACCORDANCE WITH STANDARDS PRESCRIBED BY MIL-D-70327.
4. MARK CONDUCTOR IDENTIFICATION ON SINGLE CONDUCTORS PER ND1002019 OMITTING ALL SUFFIX LETTERS EXCEPT A AND B.
5. SPACING OF CONDUCTOR IDENTIFICATION SHALL BE EVERY 19 INCHES MAX. AND AT EACH TERMINATION.
6. SPIRALLING OF THE MARKING IS ALLOWED.
7. IDENTIFY USING DRAWING NO. AND REVISION LETTER PER MIL-STD-130 (ES-2671). .12 INCH HIGH CHARACTERS WHITE.
8. Y OR N IN TINNED COLUMN INDICATES YES OR NO.
9. A LETTER WITH AN ASTERISK SUFFIX INDICATES A LOWER CASE LETTER.
10. VENDOR ITEM - SEE SPECIFICATION CONTROL DRAWING.
11. MARK IDENTIFICATION BAND WITH REFERENCE DESIGNATION AS NOTED .12 INCH HIGH COLOR WHITE, HOT IMPRESSION STAMPING PER ND1002019. CENTRALIZE.
12. MARK SLEEVING WITH REFERENCE DESIGNATIONS AS SHOWN .12 INCH HIGH, COLOR BLACK PER ND1002019.
13. MARK SLEEVING OF MULTI-CONDUCTORS WITH THE CONDUCTOR NUMBER .12 INCH HIGH, COLOR BLACK, PER ND1002019 WHEN SLEEVING ITEM NUMBERS FOLLOW AN A OR T IN THE ACCESSORIES ITEM NUMBER FIELD.

MANNED SPACECRAFT CENTER HOUSTON, TEXAS | SIZE A | 1900996
SCALE-NONE | REV LTR C | SHEET 2 OF 13

GJL CABLE W-49 C 1900996

PERMANT NOTE — GENERAL NOTES

TOLERANCE CHART, UNLESS OTHERWISE SPECIFIED ---

APPLICABLE LENGTH FOR WIRE OR CABLE, STRIP WIRE, STRIP JACKET, CUT WIRE OR CUT SHIELD.	WIRE OR CABLE	TOLERANCE STRIP	JACKET	WIRE	CUT	SHIELD
UNDER 1 INCH	+.06-.00	+.03-.00	+.06-.06	+.08-.06	+.06-.06	
1 INCH TO 6 INCHES	+.50-.00	+.06-.00	+.25-.25	+.25-.25	+.25-.25	
6 INCHES TO 6 FEET	+1.00-.00		+.50-.50	+.50-.50	+.50-.50	
OVER 6 FEET	+2.00-.00					

MANNED SPACECRAFT CENTER HOUSTON, TEXAS | SIZE A | 1900996
SCALE-NONE | REV LTR C | SHEET 4 OF 13

GJL CABLE W-49 C 1900996

PERMANT NOTE — GENERAL NOTES

14. A OR T PREFIX IN THE ACCESSORIES ITEM NUMBER COLUMN INDICATES THE READING POSITION AWAY FROM TERMINATION OR TOWARD TERMINATION RESPECTIVELY, OF THE WIRE MARKER SLEEVE.
15. THE SUFFIX LETTER OF A CONDUCTOR IDENTIFICATION NUMBER INDICATES CONDUCTOR FROM END SHIELD, COLOR, OR MARKING.
    L - WHITE WITH BLUE TRACER
    R - WHITE WITH RED TRACER
16. ASSEMBLE CONTACTS IN ALL CONNECTOR GROMMET HOLES.
17. SECURE TO CABLE USING ITEM 17. MARKING TO READ AWAY FROM CONNECTOR.
18. SEAL ZIPPER TUBING PER NC10C2159.
19. SERIALIZE PER ND1002023
20. ITEM 23 FURNISHED WITH ITEM 4.
21. ITEM 24 SHALL BE SHORTENED WHEN NECESSARY AND MAY BE CUT LENGTH WISE ON ONE SIDE. SELECT ONE OR MORE OF ITEM 24 AS REQUIRED TO FIT.

MANNED SPACECRAFT CENTER HOUSTON, TEXAS | SIZE A | 1900996
SCALE-NONE | REV LTR C | SHEET 3 OF 13

LIST OF MATERIALS

PENNANT NOTE	ITEM	QTY	PART NO	DESCRIPTION
	1	1	1900996-001	WIRE ND1002181 TYPE 1 CLASS 1 22AWG WHT 345 FT TOTAL LENGTH
	2	1	1900996-002	WIRE ND1002181 TYPE 1 CLASS 4 22AWG WHT JAKT WHT, 128 FT TOTAL LENGTH
	3	1	1900996-003	WIRE ND1002181 TYPE 2 CLASS 4 22AWG WHT JAKT WHT/RED, WHT/BLU 128 FT TOTAL LENGTH
16	4	1	MS3126F-22-55P (1897J45-55U)	CONNECTOR
10	5	1	1010411- 1	CONNECTOR
10	6	1	1010607- 1	CONNECTOR
10	7	9	1000243- 3	FERRULE, ELECT. COND
10	8	9	1000242- 2	FERRULE, ELECT. COND
10	9	8	1000243- 8	FERRULE, ELECT. COND
10	10	8	1000242- 7	FERRULE, ELECT. COND
10	11	25	1010490-198	INSULATION, SLEEVING, ELECT.
10	12	9	1010490-200	INSULATION, SLEEVING, ELECT.
10	13	4	1010490-258	INSULATION, SLEEVING, ELECT.
10	14	1	1016128-011	BAND-IDENTIFICATION
10	15	3	1016128-041	BAND-IDENTIFICATION
10	16	4	1016006-002	SPLICE REDUCER
10	17	216	1010464- 2	CONNECTOR CONTACT SOCKET

MANNED SPACECRAFT CENTER HOUSTON, TEXAS | SIZE A | 1900996
SCALE-NONE | REV LTR C | SHEET 5 OF 13

LIST OF MATERIALS

PENNANT NOTE	ITEM	QTY	PART NO	DESCRIPTION
	18	AR	MIL-T-713	LACING TAPE, TYPE P, CLASS 2, BLACK (ES-2732 NO. 18)
	19	1	1900996-004	ZIPPER TUBING ND1002155, TYPE 1, PLASTIC, FLEXIBLE, .88 DIA 13 FT TOTAL LENGTH
	20	1	1900996-005	ZIPPER TUBING ND1002155 TYPE 1, PLASTIC, FLEXIBLE, .50 DIA 3 FT TOTAL LENGTH
	21	1	1900996-006	ZIPPER TUBING ND1002155 TYPE 1, PLASTIC, FLEXIBLE, .75 DIA 3 FT TOTAL LENGTH
10	22	1	1016184-002	TRANSITION, HARNESS, 2 FINGER (Y) HEAT SHRINK
20	23	55		CONNECTION CONTACT, PIN
21	24	AR	1897147-106,-108,-112,-116	CABLE CLAMP SLEEVE
10	25	1	1016282- 22	GROMMET, RUBBER

MANNED SPACECRAFT CENTER HOUSTON, TEXAS | SIZE A | 1900996
SCALE-NONE | REV LTR D | SHEET 6 OF 13

CONDUCTOR INDIVIDUAL LENGTH NUMBER	ITEM NO.	B	FROM CUT WIRE OR SHIELD STRIP WIRE OR JACKET CIRCUIT POINT	3	T	B	TERMINATION SPEC 1	ITEM NO.	NO.	TO CUT WIRE OR SHIELD STRIP WIRE OR JACKET CIRCUIT POINT	3	T	B	TERMINATION SPEC 1	ITEM NO.	NO.
A 1	1		P1-8	19N			23			E3	25N					
A 2	1		P1-F	19N			23			P3- 12	10N			17		
A 3	1		P1-G	19N			23			P3- 13	10N			17		
A 4	1		P1-H	19N			23			P3- 91	10N			17		
A 5	3			23Q	20Q	9	10	5			23Q	20Q	A	11	7A	
						A	11									
A 5A	1		SHLD A5	25N						E1	25N					
A 5L			P1-N	19N			23			P3-108	10N			17		
A 5R			P1-M	19N			23			P3-106	10N			17		
A 6	3			23Q	20Q	9	10	5			23Q	20Q	A	11	7A	
						A	11									
A 6A	1		SHLD A6	25N						E1	25N					
A 6L			P1-R	19N			23			P3- 94	10N			17		
A 6R			P1-P	19N			23			P3- 93	10N			17		
A 7	2			23Q	20Q	7	8	5			23Q	20Q	A	12	7A	
						A	11									
A 7A	1		SHLD A7	25N						E1	25N					
A 7W			P1-S	19N			23			P3- 10	10N			17		

1> THE STD CONDUCTOR TERMINATION FIGURES ARE PER
2> DIMENSIONS ARE IN INCHES AND TWO PLACE DECIMALS.

MANNED SPACECRAFT CENTER HOUSTON, TEXAS | SIZE A | 1900996
SCALE-NONE | REV LTR C | SHEET 7 OF 13

CONDUCTOR INDIVIDUAL LENGTH NUMBER	ITEM NO.	B	FROM CUT WIRE OR SHIELD STRIP WIRE OR JACKET CIRCUIT POINT	3	T	B	TERMINATION SPEC 1	ITEM NO.	NO.	TO CUT WIRE OR SHIELD STRIP WIRE OR JACKET CIRCUIT POINT	3	T	B	TERMINATION SPEC 1	ITEM NO.	NO.
A 8	2			23Q	20Q	7	8	5			23Q	20Q	A	12	7A	
						A	11									
A 8A	1		SHLD A8	25N						E1	25N					
A 8W			P1-T	19N			23			P3- 24	10N			17		
A 9	3			28Q	25Q	9	10	5			28Q	25Q	A	11	7A	
						A	11									
A 9A	1		SHLD A9	25N						E1	25N					
A 9L			P1-V	19N			23			P3- 69	10N			17		
A 9R			P1-U	19N			23			P3- 68	10N			17		
A 10	3			28Q	25Q	9	10	5			28Q	25Q	A	11	7A	
						A	11									
A 10A	1		SHLD A10	25N						E2	25N					
A 10L			P1-B*	19N			23			P2- 2	10N			17		
A 10R			P1-A*	19N			23			P2- 1	10N			17		
A 11	3			28Q	25Q	9	10	5			28Q	25Q	A	11	7A	
						A	11									
A 11A	1		SHLD A11	25N						E2	25N					
A 11L			P1-D*	19N			23			P2- 15	10N			17		

1> THE STD CONDUCTOR TERMINATION FIGURES ARE PER
2> DIMENSIONS ARE IN INCHES AND TWO PLACE DECIMALS.

MANNED SPACECRAFT CENTER HOUSTON, TEXAS | SIZE A | 1900996
SCALE-NONE | REV LTR C | SHEET 8 OF 13

GJL CABLE W-49 C 1900996

CONDUCTOR INDIVIDUAL LENGTH NUMBER	ITEM NO.	FROM CUT WIRE OR SHIELD STRIP WIRE OR JACKET CIRCUIT POINT	TERMINATION SPEC. ITEM NO.	TO CUT WIRE OR SHIELD STRIP WIRE OR JACKET CIRCUIT POINT	TERMINATION SPEC. ITEM NO.
A 11R		P1-L*	19N 23	P2- 14	10N 17
A 12	3		28Q 25W 9 10 5 A 11		28Q 25Q A 11 7A
A 12A	1	SHLD A12	25N	E2	25N
A 12L		P1-F*	19N 23	P2- 28	10N 17
A 12R		P1-E*	19N 23	P2- 29	10N 17
A 13	3		33Q 30Q 9 10 5 A 11		33Q 30Q A 11 7A
A 13A	1	SHLD A13	25N	E2	25N
A 13L		P1-H*	19N 23	P2-107	10N 17
A 13R		P1-G*	19N 23	P2-108	10N 17
A 14	1	P1-I*	19N 23	P2- 9	10N 17
A 15	1	P1-J*	19N 23	P2- 25	22N 17
A 16	1	P1-K*	19N 23	P2- 79	22N 17
A 17	1	P1-J	19N 23	P2- 68	10N 17
A 18	1	P1-N*	19N 23	P2- 69	10N 17
A 19	1	P1-P*	19N 23	P2- 81	10N 17
A 20	1	P1-Q*	19N 23	P2- 46	10N 17

1 THE STD CONDUCTOR TERMINATION FIGURES ARE PER
2 DIMENSIONS ARE IN INCHES AND TWO PLACE DECIMALS.

MANNED SPACECRAFT CENTER HOUSTON, TEXAS | SIZE A | 1900996
SCALE - NONE | REV LTR C | SHEET 9 OF 13

GJL CABLE W-49 C 1900996

CONDUCTOR INDIVIDUAL LENGTH NUMBER	ITEM NO.	FROM CUT WIRE OR SHIELD STRIP WIRE OR JACKET CIRCUIT POINT	TERMINATION SPEC. ITEM NO.	TO CUT WIRE OR SHIELD STRIP WIRE OR JACKET CIRCUIT POINT	TERMINATION SPEC. ITEM NO.
A 21	1	P1-R*	19N 23	P2- 12	10N 17
A 22	1	P1-S*	19N 23	P2- 18	10N 17
A 23	1	P1-T*	19N 23	P2- 6	10N 17
A 24	1	P1-U*	19N 23	P2- 34	10N 17
A 25	1	P1-V*	19N 23	P2- 93	10N 17
A 26	1	P1-K	19N 23	P2- 78	10N 17
A 27	2		33Q 30Q 7 8 A 11		33Q 30Q A 12 7A
A 27A	1	SHLD A27	25N	E2	25N
A 27W		P1-X*	19N 23	P2-104	10N 17
A 28	1	P1-Y*	19N 23	P2- 56	10N 17
A 29	2		33ON 30Q 7 8 5 A 11		33Q 30Q A 12 7A
A 29A	1	SHLD A29	25N	E3	25N
A 29W		P1-Z*	19N 23	P2- 92	10N 17
A 30	1	P1-AA	19N 23	P2- 35	10N 17
A 31	1	P1-BB	19N 23	P2- 36	10N 17
A 32	2		33Q 30Q 7 8 5		33Q 30Q A 12 7A

1 THE STD CONDUCTOR TERMINATION FIGURES ARE PER
2 DIMENSIONS ARE IN INCHES AND TWO PLACE DECIMALS.

MANNED SPACECRAFT CENTER HOUSTON, TEXAS | SIZE A | 1900996
SCALE - NONE | REV LTR C | SHEET 10 OF 13

GJL CABLE W-49 C 1900996

CONDUCTOR INDIVIDUAL LENGTH NUMBER	ITEM NO.	FROM CUT WIRE OR SHIELD STRIP WIRE OR JACKET CIRCUIT POINT	TERMINATION SPEC. ITEM NO.	TO CUT WIRE OR SHIELD STRIP WIRE OR JACKET CIRCUIT POINT	TERMINATION SPEC. ITEM NO.
			A 11		
A 32A	1	SHLD A32	25N	E3	25N
A 32W		P1-CC	19N 23	P2-105	10N 17
A 33	1	P1-DD	19N 23	P2- 37	10N 17
A 34	1	P1-EE	19N 23	P2- 23	10N 17
A 35	2		38Q 35Q 7 8 5 A 11		38Q 35Q A 12 7A
A 35A	1	SHLD A35	25N	E3	25N
A 35W		P1-FF	19N 23	P2- 94	10N 17
A 36	2		38Q 35Q 7 8 5 A 11		38Q 35Q A 12 7A
A 36A	1	SHLD A36	25N	E3	25N
A 36W		P1-GG	19N 23	P2- 22	10N 17
A 37	1	P1-HH	19N 23	P2- 24	10N 17
A 38	1	E1	25N	E2	25N
A 39	1	E2	25N	E3	25N
A 40	3		38Q 35Q 9 10 5 A 11		38Q 35Q A 11 7A

1 THE STD CONDUCTOR TERMINATION FIGURES ARE PER
2 DIMENSIONS ARE IN INCHES AND TWO PLACE DECIMALS.

MANNED SPACECRAFT CENTER HOUSTON, TEXAS | SIZE A | 1900996
SCALE - NONE | REV LTR C | SHEET 11 OF 13

GJL CABLE W-49 D 1900996

CONDUCTOR INDIVIDUAL LENGTH NUMBER	ITEM NO.	FROM CUT WIRE OR SHIELD STRIP WIRE OR JACKET CIRCUIT POINT	TERMINATION SPEC. ITEM NO.	TO CUT WIRE OR SHIELD STRIP WIRE OR JACKET CIRCUIT POINT	TERMINATION SPEC. ITEM NO.
A 40A	1	SHLD A40	25N	E4	25N
A 40L		P1-D	19N 23	P3-49	10N 17
A 40R		P1-C	19N 23	P3-48	10N 17
A 41	2		43Q 40Q 7 8 5 A 11		43Q 40Q A 12 7A
A 41A	1	SHLD A41	25N	E4	25N
A 41W		P1-A	19N 23	P3-38	10N 17
A 42	2		43Q 40Q 7 8 5 A 11		43Q 40Q A 12 7A
A 42A	1	SHLD A42	25N	E4	25N
A 42W		P1-E	19N 23	P3-39	10N 17
A 43	1	E3	25N	E4	25N

1 THE STD CONDUCTOR TERMINATION FIGURES ARE PER
2 DIMENSIONS ARE IN INCHES AND TWO PLACE DECIMALS.

MANNED SPACECRAFT CENTER HOUSTON, TEXAS | SIZE A | 1900996
SCALE - NONE | REV LTR D | SHEET 12 OF 13

REVISIONS					
SYM	ZONE	DESCRIPTION	CHG NO.	DATE	APPD.
		SEE SHEET 1 FOR REVISIONS.			

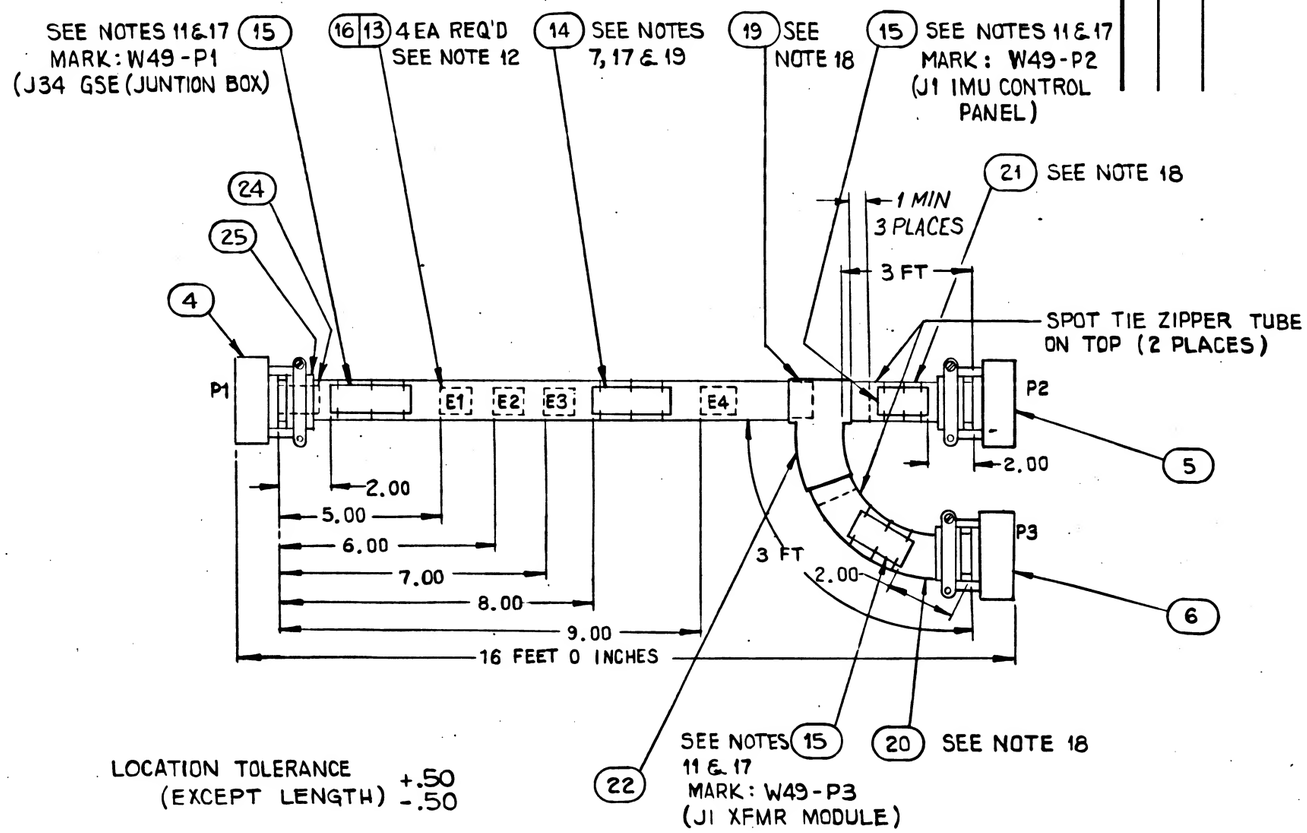

LOCATION TOLERANCE (EXCEPT LENGTH) +.50 -.50

NEXT ASSY	USED ON	UNLESS OTHERWISE SPECIFIED DIMENSIONS ARE IN INCHES TOLERANCES ON FRACTIONS + — DECIMALS + — ANGLES + —	AC SPARK PLUG DIVISION, GMC MILWAUKEE, WISCONSIN	MANNED SPACECRAFT CENTER HOUSTON, TEXAS
APPLICATION			ACSP PN	CABLE, INTERCONNECT W49 ISS TESTING
			DRAWN OEZEL DATE 12 NOV 63	
			CHECKED H MANNING 26 NOV 63	
			APPROVAL N. ABRAHAM 26 NOV 63	
		DO NOT SCALE THIS DRAWING	APPROVAL	
		MATERIAL	NASA APPROVAL	CODE IDENT NO. / SIZE C / 1900996
		CONTRACT	MIT APPROVAL	SCALE NONE / SHEET 13 OF 13

MIL 1077C-P

1900996

PENNANT NOTE	GENERAL NOTES
1	SEE CONDUCTOR CHART, PENNANT NOTE 1.
2	SEE CONDUCTOR CHART, PENNANT NOTE 2.
3	INTERPRET DRAWING IN ACCORDANCE WITH STANDARDS PRESCRIBED BY MIL-D-70327.
4	MARK CONDUCTOR IDENTIFICATION ON SINGLE CONDUCTORS PER ND1002019 OMITTING ALL SUFFIX LETTERS EXCEPT A AND B.
5	SPACING OF CONDUCTOR IDENTIFICATION SHALL BE EVERY 15 INCHES MAX. AND AT EACH TERMINATION.
6	SPIRALLING OF THE MARKING IS ALLOWED.
7	IDENTIFY USING DRAWING NO. AND REVISION LETTER PER MIL-STD-130 (ES-267). .12 INCH HIGH CHARACTERS WHITE.
8	Y OR N IN TINNED COLUMN INDICATES YES OR NO.
9	A LETTER WITH AN ASTERISK SUFFIX, INDICATES A LOWER CASE LETTER.
10	VENDOR ITEM - SEE SPECIFICATION CONTROL DRAWING.
11	MARK IDENTIFICATION BAND WITH REFERENCE DESIGNATION AS NOTED .12 INCH HIGH COLOR WHITE, HOT IMPRESSION STAMPING PER ND1002019. CENTRALIZE.
12	MARK SLEEVING WITH REFERENCE DESIGNATIONS AS SHOWN .12 INCH HIGH, COLOR BLACK PER ND1002019.
13	MARK SLEEVING OF MULTI-CONDUCTORS WITH THE CONDUCTOR NUMBER .12 INCH HIGH, COLOR BLACK, PER ND1002019 WHEN SLEEVING ITEM NUMBERS FOLLOW AN A OR T IN THE ACCESSORIES ITEM NUMBER FIELD.

PENNANT NOTE	GENERAL NOTES
14	A OR T PREFIX IN THE ACCESSORIES ITEM NUMBER COLUMN INDICATES THE READING POSITION AWAY FROM TERMINATION OR TOWARD TERMINATION RESPECTIVELY, OF THE WIRE MARKER SLEEVE.
15	THE SUFFIX LETTER OF A CONDUCTOR IDENTIFICATION NUMBER INDICATES CONDUCTOR SHIELDING, COLOR, OR MARKING. A - FROM END SHIELD L - WHITE WITH BLUE TRACER R - WHITE WITH RED TRACER
16	ASSEMBLE CONTACTS IN ALL CONNECTOR GROMMET HOLES.
17	SECURE TO CABLE USING ITEM 17, MARKING TO READ AWAY FROM CONNECTOR.
18	SEAL ZIPPER TUBING PER ND1002153
19	SERIALIZE PER ND1002023
20	ITEM 23 FURNISHED WITH ITEM 4.
21	ITEM 24 SHALL BE SHORTENED WHEN NECESSARY AND MAY BE CUT LENGTH WISE ON ONE SIDE. SELECT ONE OR MORE OF ITEM 24 AS REQUIRED TO FIT.

PENNANT NOTE — GENERAL NOTES

TOLERANCE CHART, UNLESS OTHERWISE SPECIFIED ---

APPLICABLE LENGTH FOR WIRE OR CABLE, STRIP WIRE, STRIP JACKET, CUT WIRE OR CUT SHIELD.	TOLERANCE: WIRE OR CABLE	STRIP: WIRE	STRIP: JACKET	CUT: WIRE	CUT: SHIELD
UNDER 1 INCH	+.06-.00	+.03-.00	+.06-.06	+.06-.06	+.06-.06
1 INCH TO 6 INCHES	+.50-.00	+.06-.00	+.25-.25	+.25-.25	+.25-.25
6 INCHES TO 6 FEET	+1.00-.00		+.50-.50	+.50-.50	+.50-.50
OVER 6 FEET	+2.00-.00				

V2-64

APPLICATION: NEXT ASSY 1901308 | USED ON 79 [illegible]

REVISIONS

SYM	DESCRIPTION	DATE	APPROVAL
A	CHANGE IN ACCORDANCE WITH CM 193630	4 FEB 64	JJJ
B	CHANGE IN ACCORDANCE WITH CM 195723	4 FEB 64	JJJ
C	CHANGE IN ACCORDANCE WITH CM 194719 TDRR 09216	4 FEB 64	JJJ
D	CHANGE IN ACCORDANCE WITH CM 196123 TDR ADDED CUSTOMER DATA (Y2-64)	3 APR 64	OJL
E	CHANGE IN ACCORDANCE WITH CM 196229	15 MAY 64	RB CP
F	CHANGE IN ACCORDANCE WITH CM 197541 TDRR 10668	28 MAY 64	BK
G	CHANGE IN ACCORDANCE WITH CM 197689 TDRR 11370	23 JUN 64	JJJ
H	CHANGE IN ACCORDANCE WITH CM 197760 TDRR 11746	16 JUL 64	RWP
J	CHANGE IN ACCORDANCE WITH CM 199022 TDRR 14021	30 JUL 64	JWP

FOR INFORMATION ONLY

CLASS B RELEASE TDR No. 05653 DATE 1-7-64

REV | SHEET | REV STATUS | REV | OF SHEETS | SHEET

			U	C	C	B	J	A	C	C	C	B	A
			1	2	3	4	5	6	7	8	9	10	11

AC SPARK PLUG DIVISION, GMC
MILWAUKEE, WISCONSIN

MANNED SPACECRAFT CENTER HOUSTON, TEXAS

CABLE, INTERCONNECT W49
ISS TESTING

ACSP PN

DRAWN Engel 12 NOV 63
CHECKED 26 NOV 63
APPROVAL
APPROVAL

NASA APPROVAL
MIT APPROVAL

CODE IDENT NO. | SIZE A | 1900996 | REV C

SCALE NONE | SHEET 1 OF 13

CONTRACT

INCHES 0 1

PENNANT LIST OF MATERIALS

NOTE	ITEM	QTY	PART NO	DESCRIPTION
	18	AR	MIL-T-713	LACING TAPE, TYPE P, CLASS 2, BLACK (ES-2732 NO. 18)
	19	1	1900996-004	ZIPPER TUBING ND1002155, TYPE 1, PLASTIC, FLEXIBLE, .88 DIA 13 FT TOTAL LENGTH
	20	1	1900996-005	ZIPPER TUBING ND1002155 TYPE 1, PLASTIC, FLEXIBLE, .50 DIA 3 FT TOTAL LENGTH
	21	1	1900996-006	ZIPPER TUBING ND1002155 TYPE 1, PLASTIC, FLEXIBLE, .75 DIA 3 FT TOTAL LENGTH
10	22	1	1016184-002	TRANSITION, HARNESS, 2 FINGER (Y) HEAT SHRINK
20	23	54		CONNECTION CONTACT, PIN
21	24	AR	1897147-106,-108,-112,-116	CABLE CLAMP SLEEVE
10	25	1	1016282- 22	GROMMET, RUBBER
10	26	2	1015902- 46	TERMINAL LUG
	27	3	1900996-007	TUBING, MODIFIED POLYVINYL CHLORIDE FLEXIBLE, SHRINK-FIT PER 1016197-006 6 INCH TOTAL LENGTH
	28	1	MS24056-2	CONNECTOR
	29	1	MS24018-1	CONNECTOR, HOOD
	30	1	1900996-008	TUBING, MODIFIED POLYVINYL CHLORIDE FLEXIBLE, SHRINK-FIT PER 1016197-005 30 INCHES TOTAL LENGTH

MANNED SPACECRAFT CENTER HOUSTON, TEXAS | SIZE A | 1900996
SCALE-NONE | REV LTR X J | SHEET 6 OF 13

MIL 2084 4-63

CONDUCTOR NUMBER	INDIVIDUAL LENGTH ITEM NO.	[2]		FROM CUT WIRE OR SHIELD STRIP WIRE OR JACKET CIRCUIT POINT	[2]	TIN	[2]	TERMINATION SPEC. [1] ITEM NO.				NO.		TO CUT WIRE OR SHIELD STRIP WIRE OR JACKET CIRCUIT POINT	[2]	TIN	[2]	TERMINATION SPEC [1] ITEM NO.				NO.	
A 1	1			P1-B	19N			23						E3	25N								
A 2	1			P1-F	19N			23						P3- 12	10N			17					
A 3	1			P1-G	19N			23						P3- 13	10N			17					
A 4	1			P4- 2	25N			26						P2- 91	10N			17					
A 5	3				230		200	9	10		5				230		200	A	11		7A		
								A	11														
A 5A	1			SHLD A5	25N									E1	25N								
A 5L				P1-N	19N			23						P3-108	10N			17					
A 5R				P1-M	19N			23						P3- 81	10N			17					
A 6	3				230		200	9	10		5				230		200	A	11		7A		
								A	11														
A 6A	1			SHLD A6	25N									E1	25N								
A 6L				P1-R	19N			23						P3- 94	10N			17					
A 6R				P1-P	19N			23						P3- 95	10N			17					
A 7				DELETED																			
				DELETED																			
A 7A				DELETED																			
A 7W				DELETED																			

[1] THE STD CONDUCTOR TERMINATION FIGURES ARE PER
[2] DIMENSIONS ARE IN INCHES AND TWO PLACE DECIMALS.

MANNED SPACECRAFT CENTER HOUSTON, TEXAS | SIZE A | 1900996
SCALE-NONE | REV LTR H | SHEET 7 OF 13

MIL 2088 - 4-63 WIR

PENNANT LIST OF MATERIALS

NOTE	ITEM	QTY	PART NO	DESCRIPTION
	1	1	1900996-001	WIRE ND1002181 TYPE 1 CLASS 1 22AWG WHT 377 FT TOTAL LENGTH
	2	1	1900996-002	WIRE ND1002181 TYPE 1 CLASS 4 22AWG WHT JAKT WHT, 128 FT TOTAL LENGTH
	3	1	1900996-003	WIRE ND1002181 TYPE 2 CLASS 4 22AWG WHT JAKT WHT/RED, WHT/BLU 128 FT TOTAL LENGTH
16	4	1	MS3126F-22-55P (1897045-550)	CONNECTOR
10	5	1	1010411- 1	CONNECTOR
10	6	1	1010607- 1	CONNECTOR
10	7	8	1000243- 3	FERRULE, ELECT. COND
10	8	8	1000242- 2	FERRULE, ELECT. COND
10	9	8	1000243- 8	FERRULE, ELECT. COND
10	10	8	1000242- 7	FERRULE, ELECT. COND
10	11	24	1010490-198	INSULATION, SLEEVING, ELECT.
10	12	8	1010490-200	INSULATION, SLEEVING, ELECT.
10	13	4	1010490-258	INSULATION, SLEEVING, ELECT.
10	14	1	1016128-011	BAND-IDENTIFICATION
10	15	3	1016128-041	BAND-IDENTIFICATION
10	16	4	1016006-002	SPLICE REDUCER
10	17	220	1010464- 2	CONNECTOR CONTACT SOCKET

MANNED SPACECRAFT CENTER HOUSTON, TEXAS | SIZE A | 1900996
SCALE-NONE | REV LTR H | SHEET 5 OF 13

MIL 2084 4-63

CONDUCTOR NUMBER	INDIVIDUAL LENGTH ITEM NO.	[2]		FROM CUT WIRE OR SHIELD STRIP WIRE OR JACKET CIRCUIT POINT	[2]	TIN	[2]	TERMINATION SPEC. [1] ITEM NO.				NO.		TO CUT WIRE OR SHIELD STRIP WIRE OR JACKET CIRCUIT POINT	[2]	TIN	[2]	TERMINATION SPEC [1] ITEM NO.				NO.	
A 8	2				230		200	7	8		5				230		200	A	12		7A		
								A	11														
A 8A	1			SHLD A8	25N									E1	25N								
A 8W				P1-T	19N			23						P3- 24	10N			17					
A 9	3				280		250	9	10		5				280		250	A	11		7A		
								A	11														
A 9A	1			SHLD A9	25N									E1	25N								
A 9L				P1-V	19N			23						P3- 69	10N			17					
A 9R				P1-U	19N			23						P3- 68	10N			17					
A 10	3				280		250	9	10		5				280		250	A	11		7A		
								A	11														
A 10A	1			SHLD A10	25N									E2	25N								
A 10L				P1-B*	19N			23						P2- 2	10N			17					
A 10R				P1-A*	19N			23						P2- 1	10N			17					
A 11	3				280		250	9	10		5				280		250	A	11		7A		
								A	11														
A 11A	1			SHLD A11	25N									E2	25N								
A 11L				P1-D*	19N			23						P2- 15	10N			17					

[1] THE STD CONDUCTOR TERMINATION FIGURES ARE PER
[2] DIMENSIONS ARE IN INCHES AND TWO PLACE DECIMALS.

MANNED SPACECRAFT CENTER HOUSTON, TEXAS | SIZE A | 1900996
SCALE-NONE | REV LTR C | SHEET 8 OF 13

MIL 2088 - 4-63 WIR

INCHES 1 0 1 2 3 4 5 6 7 8 9 10 11 12 13 14 15 16 17 18 19 20 21 22 23 24 25 26 27 28 29 30 31 32 33 34 35 36 37 38 39

GJL CABLE W-49 C 1900996

CONDUCTOR INDIVIDUAL LENGTH NUMBER	ITEM NO.	2	FROM CUT WIRE OR SHIELD STRIP WIRE OR JACKET CIRCUIT POINT	2	TIN	2	TERMINATION SPEC. 1 ITEM NO.	NO.	TO CUT WIRE OR SHIELD STRIP WIRE OR JACKET CIRCUIT POINT	2	TIN	2	TERMINATION SPEC. 1 ITEM NO.	NO.
A 21	1		P1-R*	19	N		23		P2- 12	10	N		17	
A 22	1		P1-S*	19	N		23		P2- 18	10	N		17	
A 23	1		P1-T*	19	N		23		P2- 6	10	N		17	
A 24	1		P1-U*	19	N		23		P2- 34	10	N		17	
A 25	1		P1-V*	19	N		23		P2- 93	10	N		17	
A 26	1		P1-K	19	N		23		P2- 78	10	N		17	
A 27	2			33	0	30	0 7 8 A 11			33	0	30	0 A 12 7A	
A 27A	1		SHLD A27	25	N				E2	25	N			
A 27W			P1-X*	19	N		23		P2-104	10	N		17	
A 28	1		P1-Y*	19	N		23		P2- 56	10	N		17	
A 29	2			33	0N	30	0 7 8 A 11	5		33	0	30	0 A 12 7A	
A 29A	1		SHLD A29	25	N				E3	25	N			
A 29W			P1-Z*	19	N		23		P2- 92	10	N		17	
A 30	1		P1-AA	19	N		23		P2- 35	10	N		17	
A 31	1		P1-BB	19	N		23		P2- 36	10	N		17	
A 32	2			33	0	30	0 7 8	5		33	0	30	0 A 12	7A

1 THE STD CONDUCTOR TERMINATION FIGURES ARE PER
2 DIMENSIONS ARE IN INCHES AND TWO PLACE DECIMALS.

MANNED SPACECRAFT CENTER HOUSTON, TEXAS | SIZE A | 1900996

SCALE - NONE | REV LTR C | SHEET 10 OF 13

MIL 2089 - 4-63 WIR

GJL CABLE W-49 C 1900996

CONDUCTOR INDIVIDUAL LENGTH NUMBER	ITEM NO.	2	FROM CUT WIRE OR SHIELD STRIP WIRE OR JACKET CIRCUIT POINT	2	TIN	2	TERMINATION SPEC. 1 ITEM NO.	NO.	TO CUT WIRE OR SHIELD STRIP WIRE OR JACKET CIRCUIT POINT	2	TIN	2	TERMINATION SPEC. 1 ITEM NO.	NO.
A 11R			P1-C*	19	N		23		P2- 14	10	N		17	
A 12	3			28	0	25	0 9 10 A 11	5		28	0	25	0 A 11 7A	
A 12A	1		SHLD A12	25	N				E2	25	N			
A 12L			P1-F*	19	N		23		P2- 28	10	N		17	
A 12R			P1-E*	19	N		23		P2- 29	10	N		17	
A 13	3			33	0	30	0 9 10 A 11	5		33	0	30	0 A 11 7A	
A 13A	1		SHLD A13	25	N				E2	25	N			
A 13L			P1-H*	19	N		23		P2-107	10	N		17	
A 13R			P1-G*	19	N		23		P2-108	10	N		17	
A 14	1		P1-I*	19	N		23		P2- 9	10	N		17	
A 15	1		P1-J*	19	N		23		P2- 25	22	N		17	
A 16	1		P1-K*	19	N		23		P2- 79	22	N		17	
A 17	1		P1-J	19	N		23		P2- 68	10	N		17	
A 18	1		P1-N*	19	N		23		P2- 69	10	N		17	
A 19	1		P1-P*	19	N		23		P2- 81	10	N		17	
A 20	1		P1-Q*	19	N		23		P2- 46	10	N		17	

1 THE STD CONDUCTOR TERMINATION FIGURES ARE PER
2 DIMENSIONS ARE IN INCHES AND TWO PLACE DECIMALS.

MANNED SPACECRAFT CENTER HOUSTON, TEXAS | SIZE A | 1900996

SCALE - NONE | REV LTR C | SHEET 9 OF 13

MIL 2089 - 4-63 WIR

GJL CABLE W-49 C 1900996

CONDUCTOR INDIVIDUAL LENGTH NUMBER	ITEM NO.	2	FROM CUT WIRE OR SHIELD STRIP WIRE OR JACKET CIRCUIT POINT	2	TIN	2	TERMINATION SPEC. 1 ITEM NO.	NO.	TO CUT WIRE OR SHIELD STRIP WIRE OR JACKET CIRCUIT POINT	2	TIN	2	TERMINATION SPEC. 1 ITEM NO.	NO.
							A 11							
A 32A	1		SHLD A32	25	N				E3	25	N			
A 32W			P1-CC	19	N		23		P2-105	10	N		17	
A 33	1		P1-DD	19	N		23		P2- 37	10	N		17	
A 34	1		P1-EE	19	N		23		P2- 23	10	N		17	
A 35	2			38	0	35	0 7 8 A 11	5		38	0	35	0 A 12 7A	
A 35A	1		SHLD A35	25	N				E3	25	N			
A 35W			P1-FF	19	N		23		P2- 94	10	N		17	
A 36	2			38	0	35	0 7 8 A 11	5		38	0	35	0 A 12 7A	
A 36A	1		SHLD A36	25	N				E3	25	N			
A 36W			P1-GG	19	N		23		P2- 22	10	N		17	
A 37	1		P1-HH	19	N		23		P2- 24	10	N		17	
A 38	1		E1	25	N				E2	25	N			
A 39	1		E2	25	N				E3	25	N			
A 40	3			38	0	35	0 9 10 A 11	5		38	0	35	0 A 11 7A	

1 THE STD CONDUCTOR TERMINATION FIGURES ARE PER
2 DIMENSIONS ARE IN INCHES AND TWO PLACE DECIMALS.

MANNED SPACECRAFT CENTER HOUSTON, TEXAS | SIZE A | 1900996

SCALE - NONE | REV LTR C | SHEET 11 OF 13

MIL 2089 - 4-63 WIR

GJL CABLE W-49 H 1900996

CONDUCTOR INDIVIDUAL LENGTH NUMBER	ITEM NO.	2	FROM CUT WIRE OR SHIELD STRIP WIRE OR JACKET CIRCUIT POINT	2	TIN	2	TERMINATION SPEC. 1 ITEM NO.	NO.	TO CUT WIRE OR SHIELD STRIP WIRE OR JACKET CIRCUIT POINT	2	TIN	2	TERMINATION SPEC. 1 ITEM NO.	NO.
A 40A	1		SHLD A40	25	N				E4	25	N			
A 40L			F1-D	19	N		23		P3-49	10	N		17	
A 40R			P1-C	19	N		23		P3-48	10	N		17	
A 41	2			43	0	40	0 7 8 A 11	5		43	0	40	0 A 12 7A	
A 41A	1		SHLD A41	25	N				E4	25	N			
A 41W			P1-A	19	N		23		P3-38	10	N		17	
A 42	2			43	0	40	0 7 8 A 11	5		43	0	40	0 A 12 7A	
A 42A	1		SHLD A42	25	N				E4	25	N			
A 42W			P1-E	19	N		23		P3-39	10	N		17	
A 43	1		E3	25	N				E4	25	N			
A 44	1		P4- 1	25	N				P3- 1	10	N		17	
A 45	1		P1-W	19	N		23		P3- 9	10	N		17	
A 46	1		P1-X	19	N		23		P3- 8	10	N		17	
A 47	1		P5-D	25	Y				P3-106	10	N		17	
A 48	1		P5-C	25	Y				P3- 93	10	N		17	
A 49	1		P5-B	25	Y				P3- 10	10	N		17	

1 THE STD CONDUCTOR TERMINATION FIGURES ARE PER
2 DIMENSIONS ARE IN INCHES AND TWO PLACE DECIMALS.

MANNED SPACECRAFT CENTER HOUSTON, TEXAS | SIZE A | 1900996

SCALE - NONE | REV LTR H | SHEET 12 OF 13

MIL 2089 - 4-63 WIR

INCHES

9660061

REVISIONS					
SYM	ZONE	DESCRIPTION	CHG NO.	DATE	APPD.
		SEE SHEET 1 FOR REVISIONS.			

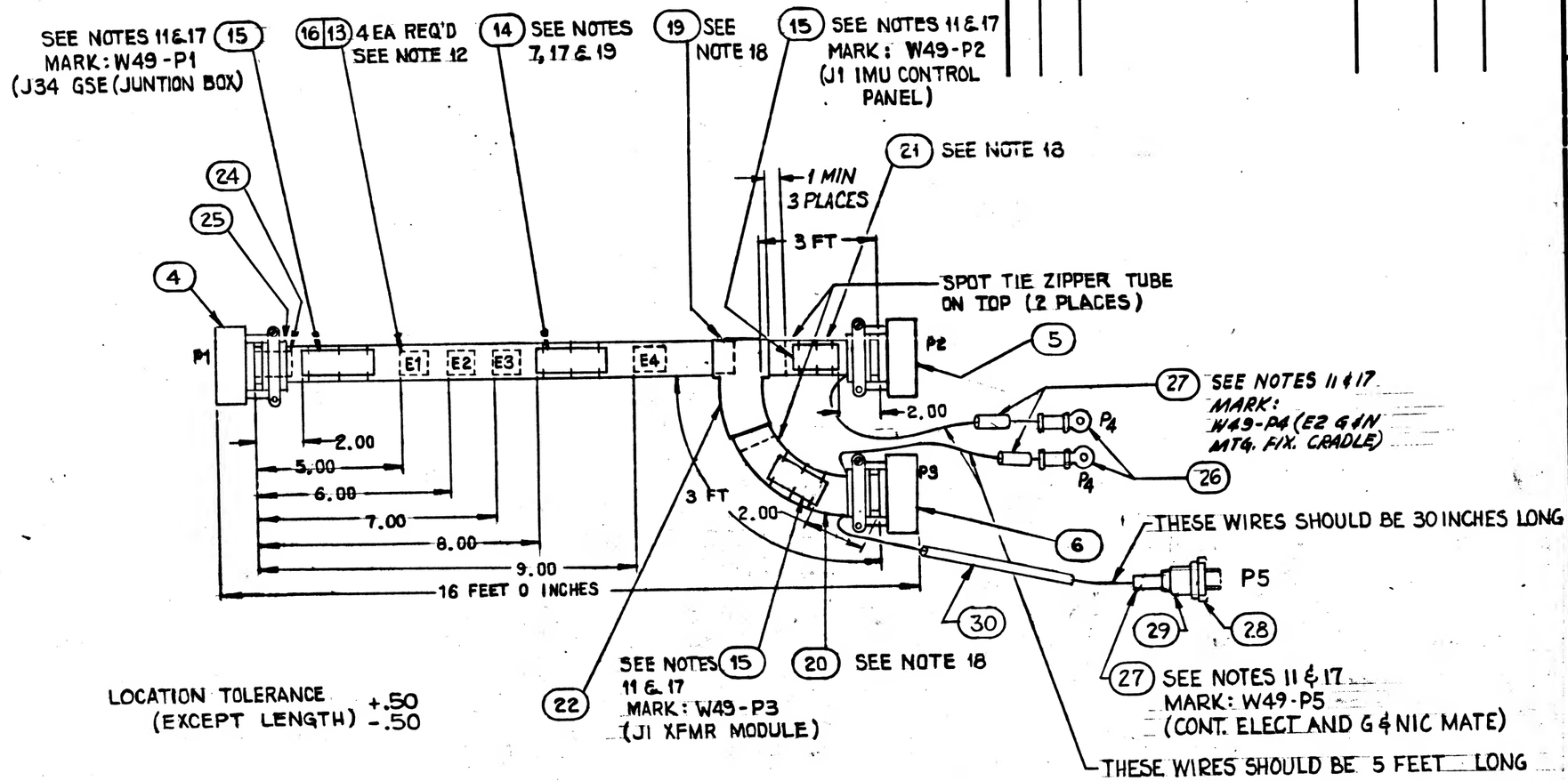

LOCATION TOLERANCE (EXCEPT LENGTH) +.50 -.50

NEXT ASSY	USED ON
APPLICATION	

UNLESS OTHERWISE SPECIFIED
DIMENSIONS ARE IN INCHES
TOLERANCES ON
FRACTIONS + — — DECIMALS + — — ANGLES + — —
DO NOT SCALE THIS DRAWING
MATERIAL
CONTRACT

AC SPARK PLUG DIVISION, GMC
MILWAUKEE, WISCONSIN
ACSP PN
DRAWN Orzel DATE 12 NOV 63
CHECKED N. Manning 26 NOV 63
APPROVAL N. ABRAHAM 26 NOV 63
APPROVAL 9/14/64
NASA APPROVAL 9/15/64
MIT APPROVAL 9/15/64

MANNED SPACECRAFT CENTER
HOUSTON, TEXAS

CABLE, INTERCONNECT W49
ISS TESTING

CODE IDENT NO. | SIZE C | 1900996
SCALE NONE | SHEET 13 OF 13

MIL 1077C-P

INCHES 0 1 2
PHOTOGRAPHIC SCALE ONLY

APPLICATION		REVISIONS			
NEXT ASSY	USED ON	SYM	DESCRIPTION	DATE	APPROVAL
1901308	1900005-011	A	CHANGE IN ACCORDANCE WITH CM 193630	4 FEB 64	J.J.J.
		B	CHANGE IN ACCORDANCE WITH CM 193723	4 FEB 64	J.J.J.
		C	CHANGE IN ACCORDANCE WITH CM 194719 TOOK 0976	4 FEB 64	J.J.J.
		D	CHANGE IN ACCORDANCE WITH CM 196123 ADDED CUSTOMER DATA (V2-64)	3 APR 64	CJL
		E	CHANGE IN ACCORDANCE WITH CM 196299	19 MAY 64	R.B.
			REVISED PER TDR 09717		
		F	CHANGE IN ACCORDANCE WITH CM 197541 TOOK 10688	28 MAY 64	B.K.
		G	CHANGE IN ACCORDANCE WITH CM 197689 TOOK 1179	23 JUN 64	J.J.J.
		H	CHANGE IN ACCORDANCE WITH CM 197760 TOOK 11746	16 JUL 64	R.B.
		J	CHANGE IN ACCORDANCE WITH CM 199022 TOOK 11744	30 JUL 64	J.W.P.
		K	REVISED & UPGRADED TO CLASS A PER TDRR 14941	21 DEC 64	J.J.J.

REV														
SHEET														
REV STATUS	REV	K	C	C	C	K	J	H	C	C	C	C	H	J
OF SHEETS	SHEET	1	2	3	4	5	6	7	8	9	10	11	12	13

MANNED SPACECRAFT CENTER
HOUSTON, TEXAS

AC SPARK PLUG DIVISION, GMC
MILWAUKEE, WISCONSIN

ACSP PN

DRAWN 12 NOV 63
CHECKED 26 NOV 63
APPROVAL 18/64
NASA APPROVAL
MIT APPROVAL
CONTRACT

CABLE, INTERCONNECT W49
ISS TESTING

CODE IDENT NO. | SIZE A | 1900996 | REV K

SCALE NONE | SHEET 1 OF 13

PENNANT NOTE — GENERAL NOTES

1 SEE CONDUCTOR CHART, PENNANT NOTE 1.

2 SEE CONDUCTOR CHART, PENNANT NOTE 2.

3 INTERPRET DRAWING IN ACCORDANCE WITH STANDARDS PRESCRIBED BY MIL-D-70327.

4 MARK CONDUCTOR IDENTIFICATION ON SINGLE CONDUCTORS PER ND1002019 OMITTING ALL SUFFIX LETTERS EXCEPT A AND B.

5 SPACING OF CONDUCTOR IDENTIFICATION SHALL BE EVERY 15 INCHES MAX. AND AT EACH TERMINATION.

6 SPIRALLING OF THE MARKING IS ALLOWED.

7 IDENTIFY USING DRAWING NO. AND REVISION LETTER PER MIL-STD-130 (ES-267). .12 INCH HIGH CHARACTERS WHITE.

8 Y OR N IN TINNED COLUMN INDICATES YES OR NO.

9 A LETTER WITH AN ASTERISK SUFFIX, INDICATES A LOWER CASE LETTER.

10 VENDOR ITEM - SEE SPECIFICATION CONTROL DRAWING.

11 MARK IDENTIFICATION BAND WITH REFERENCE DESIGNATION AS NOTED .12 INCH HIGH COLOR WHITE, HOT IMPRESSION STAMPING PER ND1002019. CENTRALIZE.

12 MARK SLEEVING WITH REFERENCE DESIGNATIONS AS SHOWN .12 INCH HIGH, COLOR BLACK PER ND1002019.

13 MARK SLEEVING OF MULTI-CONDUCTORS WITH THE CONDUCTOR NUMBER .12 INCH HIGH, COLOR BLACK, PER ND1002019 WHEN SLEEVING ITEM NUMBERS FOLLOW AN A OR T IN THE ACCESSORIES ITEM NUMBER FIELD.

PENNANT NOTE — GENERAL NOTES

14 A OR T PREFIX IN THE ACCESSORIES ITEM NUMBER COLUMN INDICATES THE READING POSITION AWAY FROM TERMINATION OR TOWARD TERMINATION RESPECTIVELY, OF THE WIRE MARKER SLEEVE.

15 THE SUFFIX LETTER OF A CONDUCTOR IDENTIFICATION NUMBER INDICATES CONDUCTOR SHIELDING, COLOR, OR MARKING.
A - FROM END SHIELD
L - WHITE WITH BLUE TRACER
R - WHITE WITH RED TRACER

16 ASSEMBLE CONTACTS IN ALL CONNECTOR GROMMET HOLES.

17 SECURE TO CABLE USING ITEM 17, MARKING TO READ AWAY FROM CONNECTOR.

18 SEAL ZIPPER TUBING PER ND1002153

19 SERIALIZE PER ND1002023

20 ITEM 23 FURNISHED WITH ITEM 4.

21 ITEM 24 SHALL BE SHORTENED WHEN NECESSARY AND MAY BE CUT LENGTH WISE ON ONE SIDE. SELECT ONE OR MORE OF ITEM 24 AS REQUIRED TO FIT.

PENNANT NOTE — GENERAL NOTES

TOLERANCE CHART, UNLESS OTHERWISE SPECIFIED ---

APPLICABLE LENGTH FOR WIRE OR CABLE, STRIP WIRE, STRIP JACKET, CUT WIRE OR CUT SHIELD.	TOLERANCE				
	WIRE OR CABLE	STRIP WIRE	STRIP JACKET	CUT WIRE	CUT SHIELD
UNDER 1 INCH	+ .06-.00	+.03-.00	+.06-.06	+.06-.06	+.06-.06
1 INCH TO 6 INCHES	+ .50-.00	+.06-.00	+.25-.25	+.25-.25	+.25-.25
6 INCHES TO 6 FEET	+1.00-.00		+.50-.50	+.50-.50	+.50-.50
OVER 6 FEET	+2.00-.00				

PENNANT NOTE — LIST OF MATERIALS

NOTE	ITEM	QTY	PART NO	DESCRIPTION
	1	1	1900996-001	WIRE ND1002181 TYPE 1 CLASS 1 22AWG WHT 384 FT 6 INCHES TOTAL LENGTH
	2	1	1900996-002	WIRE ND1002181 TYPE 1 CLASS 4 22AWG WHT JAKT WHT, 128 FT TOTAL LENGTH
	3	1	1900996-003	WIRE ND1002181 TYPE 2 CLASS 4 22AWG WHT JAKT WHT/RED, WHT/BLU 128 FT TOTAL LENGTH
16	4	1	MS3126F-22-55P (1897045-550)	CONNECTOR
10	5	1	1897173-001	CONNECTOR
10	6	1	1897171-001	CONNECTOR
10	7	8	1000243- 3	FERRULE, ELECT. COND
10	8	8	1000242- 2	FERRULE, ELECT. COND
10	9	8	1000243- 8	FERRULE, ELECT. COND
10	10	8	1000242- 7	FERRULE, ELECT. COND
10	11	24	1010490-198	INSULATION, SLEEVING, ELECT.
10	12	8	1010490-200	INSULATION, SLEEVING, ELECT.
10	13	4	1010490-258	INSULATION, SLEEVING, ELECT.
10	14	1	1016128-011	BAND-IDENTIFICATION
10	15	3	1016128-041	BAND-IDENTIFICATION
10	16	4	1016006-002	SPLICE REDUCER
10	17	220	1010738- 6	CONNECTOR CONTACT SOCKET

LIST OF MATERIALS

PENNANT NOTE	ITEM	QTY	PART NO	DESCRIPTION
	18	AR	MIL-T-713	LACING TAPE, TYPE P, CLASS 2, BLACK (ES-2732 NO. 18)
	19	1	1900996-004	ZIPPER TUBING ND1002155, TYPE 1, PLASTIC, FLEXIBLE, .88 DIA 13 FT TOTAL LENGTH
	20	1	1900996-005	ZIPPER TUBING ND1002155 TYPE 1, PLASTIC, FLEXIBLE, .50 DIA 3 FT TOTAL LENGTH
	21	1	1900996-006	ZIPPER TUBING ND1002155 TYPE 1, PLASTIC, FLEXIBLE, .75 DIA 3 FT TOTAL LENGTH
10	22	1	1016184-002	TRANSITION, HARNESS, 2 FINGER (Y) HEAT SHRINK
20	23	54		CONNECTION CONTACT, PIN
21	24	AR	1897147-106,-108,-112,-116	CABLE CLAMP SLEEVE
10	25	1	1016282- 22	GROMMET, RUBBER
10	26	2	1015902- 46	TERMINAL LUG
	27	3	1900996-007	TUBING, MODIFIED POLYVINYL CHLORIDE FLEXIBLE, SHRINK-FIT PER 1016197-006 6 INCH TOTAL LENGTH
	28	1	MS24056-2	CONNECTOR
	29	1	MS24018-1	CONNECTOR, HOOD
	30	1	1900996-008	TUBING, MODIFIED POLYVINYL CHLORIDE FLEXIBLE, SHRINK-FIT PER 1016197-005 30 INCHES TOTAL LENGTH

CONDUCTOR INDIVIDUAL LENGTH NUMBER	ITEM NO. (2)	FROM CUT WIRE OR SHIELD STRIP WIRE OR JACKET CIRCUIT POINT (2)	T I N (2)	TERMINATION SPEC (1) ITEM NO.	NO.	TO CUT WIRE OR SHIELD STRIP WIRE OR JACKET CIRCUIT POINT (2)	T I N (2)	TERMINATION SPEC (1) ITEM NO.	NO.
A 1	1	P1-B	19N	23		E3	25N		
A 2	1	P1-F	19N	23		P3- 12	10N	17	
A 3	1	P1-G	19N	23		P3- 13	10N	17	
A 4	1	P4- 2	25N	26		P2- 91	10N	17	
A 5	3		230 200	9 10	5		230 200	A 11	7A
				A 11					
A 5A	1	SHLD A5	25N			E1	25N		
A 5L		P1-N	19N	23		P3-108	10N	17	
A 5R		P1-M	19N	23		P3- 81	10N	17	
A 6	3		230 200	9 10	5		230 200	A 11	7A
				A 11					
A 6A	1	SHLD A6	25N			E1	25N		
A 6L		P1-R	19N	23		P3- 94	10N	17	
A 6R		P1-P	19N	23		P3- 95	10N	17	
A 7		DELETED							
		DELETED							
A 7A		DELETED							
A 7W		DELETED							

(1) THE STD CONDUCTOR TERMINATION FIGURES ARE PER
(2) DIMENSIONS ARE IN INCHES AND TWO PLACE DECIMALS.

CONDUCTOR INDIVIDUAL LENGTH NUMBER	ITEM NO. (2)	FROM CUT WIRE OR SHIELD STRIP WIRE OR JACKET CIRCUIT POINT (2)	T I N (2)	TERMINATION SPEC (1) ITEM NO.	NO.	TO CUT WIRE OR SHIELD STRIP WIRE OR JACKET CIRCUIT POINT (2)	T I N (2)	TERMINATION SPEC (1) ITEM NO.	NO.
A 8	2		230 200	7 8	5		230 200	A 12	7A
				A 11					
A 8A	1	SHLD A8	25N			E1	25N		
A 8W		P1-T	19N	23		P3- 24	10N	17	
A 9	3		280 250	9 10	5		280 250	A 11	7A
				A 11					
A 9A	1	SHLD A9	25N			E1	25N		
A 9L		P1-V	19N	23		P3- 69	10N	17	
A 9R		P1-U	19N	23		P3- 68	10N	17	
A 10	3		280 250	9 10	5		280 250	A 11	7A
				A 11					
A 10A	1	SHLD A10	25N			E2	25N		
A 10L		P1-B*	19N	23		P2- 2	10N	17	
A 10R		P1-A*	19N	23		P2- 1	10N	17	
A 11	3		280 250	9 10	5		280 250	A 11	7A
				A 11					
A 11A	1	SHLD A11	25N			E2	25N		
A 11L		P1-D*	19N	23		P2- 15	10N	17	

(1) THE STD CONDUCTOR TERMINATION FIGURES ARE PER
(2) DIMENSIONS ARE IN INCHES AND TWO PLACE DECIMALS.

CONDUCTOR INDIVIDUAL LENGTH NUMBER	ITEM NO. (2)	FROM CUT WIRE OR SHIELD STRIP WIRE OR JACKET CIRCUIT POINT (2)	T I N (2)	TERMINATION SPEC (1) ITEM NO.	NO.	TO CUT WIRE OR SHIELD STRIP WIRE OR JACKET CIRCUIT POINT (2)	T I N (2)	TERMINATION SPEC (1) ITEM NO.	NO.
A 11R		P1-C*	19N	23		P2- 14	10N	17	
A 12	3		280 250	9 10	5		280 250	A 11	7A
				A 11					
A 12A	1	SHLD A12	25N			E2	25N		
A 12L		P1-F*	19N	23		P2- 28	10N	17	
A 12R		P1-E*	19N	23		P2- 29	10N	17	
A 13	3		330 300	9 10	5		330 300	A 11	7A
				A 11					
A 13A	1	SHLD A13	25N			E2	25N		
A 13L		P1-H*	19N	23		P2-107	10N	17	
A 13R		P1-G*	19N	23		P2-108	10N	17	
A 14	1	P1-I*	19N	23		P2- 9	10N	17	
A 15	1	P1-J*	19N	23		P2- 25	22N	17	
A 16	1	P1-K*	19N	23		P2- 79	22N	17	
A 17	1	P1-J	19N	23		P2- 68	10N	17	
A 18	1	P1-N*	19N	23		P2- 69	10N	17	
A 19	1	P1-P*	19N	23		P2- 81	10N	17	
A 20	1	P1-Q*	19N	23		P2- 46	10N	17	

(1) THE STD CONDUCTOR TERMINATION FIGURES ARE PER
(2) DIMENSIONS ARE IN INCHES AND TWO PLACE DECIMALS.

GJL CABLE W-49 C 1900996

CONDUCTOR INDIVIDUAL LENGTH NUMBER	ITEM NO.	2	FROM CUT WIRE OR SHIELD STRIP WIRE OR JACKET CIRCUIT POINT	3	TYPE	2	TERMINATION SPEC 1 ITEM NO.	NO.	TO CUT WIRE OR SHIELD STRIP WIRE OR JACKET CIRCUIT POINT	3	TYPE	2	TERMINATION SPEC 1 ITEM NO.	NO.
A 21	1		P1-R*	19	N		23		P2- 12	10	N		17	
A 22	1		P1-S*	19	N		23		P2- 18	10	N		17	
A 23	1		P1-T*	19	N		23		P2- 6	10	N		17	
A 24	1		P1-U*	19	N		23		P2- 34	10	N		17	
A 25	1		P1-V*	19	N		23		P2- 93	10	N		17	
A 26	1		P1-K	19	N		23		P2- 78	10	N		17	
A 27	2			33	0	30	7 8			33	0	30	A 12 7A	
							A 11							
A 27A	1		SHLD A27	25	N				E2	25	N			
A 27W			P1-X*	19	N		23		P2-104	10	N		17	
A 28	1		P1-Y*	19	N		23		P2- 56	10	N		17	
A 29	2			33	0N	30	7 8	5		33	0	30	A 12 7A	
							A 11							
A 29A	1		SHLD A29	25	N				E3	25	N			
A 29W			P1-Z*	19	N		23		P2- 92	10	N		17	
A 30	1		P1-AA	19	N		23		P2- 35	10	N		17	
A 31	1		P1-BB	19	N		23		P2- 36	10	N		17	
A 32	2			33	0	30	7 8	5		33	0	30	A 12 7A	

1 THE STD CONDUCTOR TERMINATION FIGURES ARE PER
2 DIMENSIONS ARE IN INCHES AND TWO PLACE DECIMALS.

MANNED SPACECRAFT CENTER HOUSTON, TEXAS | SIZE A | 1900996
SCALE - NONE | REV LTR C | SHEET 10 OF 13

MIL 2049 - 4-65 WIR

GJL CABLE W-49 C 1900996

CONDUCTOR INDIVIDUAL LENGTH NUMBER	ITEM NO.	2	FROM CUT WIRE OR SHIELD STRIP WIRE OR JACKET CIRCUIT POINT	3	TYPE	2	TERMINATION SPEC 1 ITEM NO.	NO.	TO CUT WIRE OR SHIELD STRIP WIRE OR JACKET CIRCUIT POINT	3	TYPE	2	TERMINATION SPEC 1 ITEM NO.	NO.
							A 11							
A 32A	1		SHLD A32	25	N				E3	25	N			
A 32W			P1-CC	19	N		23		P2-105	10	N		17	
A 33	1		P1-DD	19	N		23		P2- 37	10	N		17	
A 34	1		P1-EE	19	N		23		P2- 23	10	N		17	
A 35	2			38	0	35	7 8	5		38	0	35	A 12 7A	
							A 11							
A 35A	1		SHLD A35	25	N				E3	25	N			
A 35W			P1-FF	19	N		23		P2- 94	10	N		17	
A 36	2			38	0	35	7 8	5		38	0	35	A 12 7A	
							A 11							
A 36A	1		SHLD A36	25	N				E3	25	N			
A 36W			P1-GG	19	N		23		P2- 22	10	N		17	
A 37	1		P1-HH	19	N		23		P2- 24	10	N		17	
A 38	1		E1	25	N				E2	25	N			
A 39	1		E2	25	N				E3	25	N			
A 40	3			38	0	35	9 10	5		38	0	35	A 11 7A	
							A 11							

1 THE STD CONDUCTOR TERMINATION FIGURES ARE PER
2 DIMENSIONS ARE IN INCHES AND TWO PLACE DECIMALS.

MANNED SPACECRAFT CENTER HOUSTON, TEXAS | SIZE A | 1900996
SCALE - NONE | REV LTR C | SHEET 11 OF 13

MIL 2049 - 4-65 WIR

GJL CABLE W-49 H 1900996

CONDUCTOR INDIVIDUAL LENGTH NUMBER	ITEM NO.	2	FROM CUT WIRE OR SHIELD STRIP WIRE OR JACKET CIRCUIT POINT	3	TYPE	2	TERMINATION SPEC 1 ITEM NO.	NO.	TO CUT WIRE OR SHIELD STRIP WIRE OR JACKET CIRCUIT POINT	3	TYPE	2	TERMINATION SPEC 1 ITEM NO.	NO.
A 40A	1		SHLD A40	25	N				E4	25	N			
A 40L			P1-D	19	N		23		P3-49	10	N		17	
A 40R			P1-C	19	N		23		P3-48	10	N		17	
A 41	2			43	0	40	7 8	5		43	0	40	A 12 7A	
							A 11							
A 41A	1		SHLD A41	25	N				E4	25	N			
A 41W			P1-A	19	N		23		P3-38	10	N		17	
A 42	2			43	0	40	7 8	5		43	0	40	A 12 7A	
							A 11							
A 42A	1		SHLD A42	25	N				E4	25	N			
A 42W			P1-E	19	N		23		P3-39	10	N		17	
A 43	1		E3	25	N				E4	25	N			
A 44	1		P4- 1	25	N				P3- 1	10	N		17	
A 45	1		P1-W	19	N		23		P3- 9	10	N		17	
A 46	1		P1-X	19	N		23		P3- 8	10	N		17	
A 47	1		P5-D	25	Y				P3-106	10	N		17	
A 48	1		P5-C	25	Y				P3- 93	10	N		17	
A 49	1		P5-B	25	Y				P3- 10	10	N		17	

1 THE STD CONDUCTOR TERMINATION FIGURES ARE PER
2 DIMENSIONS ARE IN INCHES AND TWO PLACE DECIMALS.

MANNED SPACECRAFT CENTER HOUSTON, TEXAS | SIZE A | 1900996
SCALE - NONE | REV LTR H | SHEET 12 OF 13

MIL 2049 - 4-65 WIR

9660061

REVISIONS					
SYM	ZONE	DESCRIPTION	CHG NO.	DATE	APPD.
		SEE SHEET 1 FOR REVISIONS.			

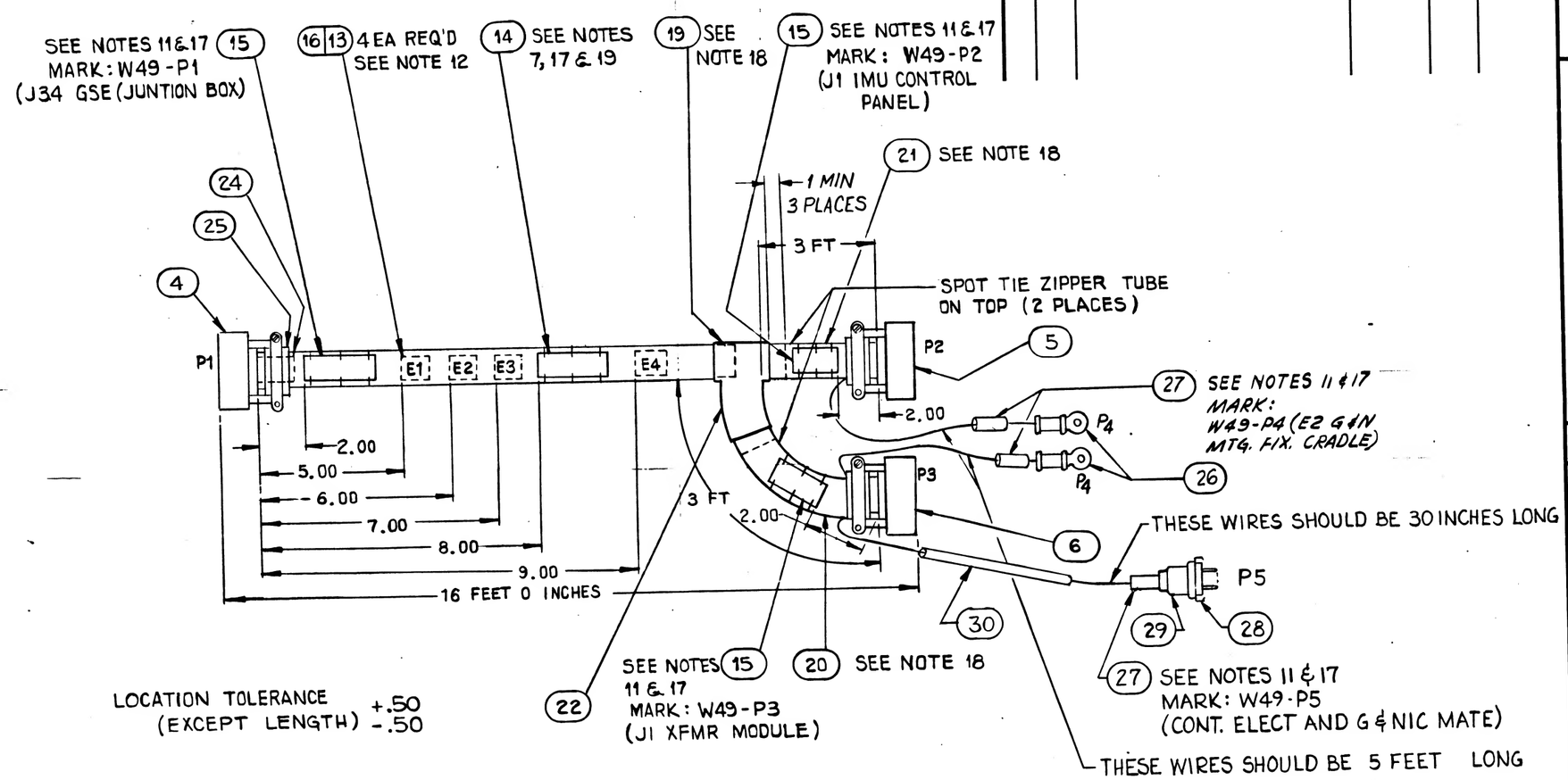

LOCATION TOLERANCE (EXCEPT LENGTH) +.50 -.50

NEXT ASSY	USED ON	UNLESS OTHERWISE SPECIFIED DIMENSIONS ARE IN INCHES TOLERANCES ON FRACTIONS + — DECIMALS + — ANGLES + —	AC SPARK PLUG DIVISION, GMC MILWAUKEE, WISCONSIN	MANNED SPACECRAFT CENTER HOUSTON, TEXAS
APPLICATION		DO NOT SCALE THIS DRAWING	ACSP PN	CABLE, INTERCONNECT W49 ISS TESTING
		MATERIAL	DRAWN ORZEL 12 NOV 63 DATE	CODE IDENT NO. / SIZE C / 1900996
			CHECKED M. MANNING 26 NOV 63	
			APPROVAL N. ABRAHAM 26 NOV 63	
			APPROVAL 9/14/64	
			NASA APPROVAL	SCALE NONE / SHEET 13 OF 13
		CONTRACT	MIT APPROVAL 9/15/64	

MIL 1077C-P

1900996

APPLICATION		REVISIONS			
NEXT ASSY	USED ON	SYM	DESCRIPTION	DATE	APPROVAL
1901308	1900005-011	A	CHANGE IN ACCORDANCE WITH CM 193630	4 FEB 64	JJJ J.E.G.
		B	CHANGE IN ACCORDANCE WITH CM 193723	4 FEB 64	JJJ J.E.G.
		C	CHANGE IN ACCORDANCE WITH CM 194719 TDRR 09716	4 FEB 64	JJJ J.E.G.
		D	CHANGE IN ACCORDANCE WITH CM 196123 ADDED CUSTOMER DATA (Y2-69)	3 APR 64	CJL MGM
		E	CHANGE IN ACCORDANCE WITH CM 196239	15 MAY 64	RB CP
		(H)	REVISED PER TDR 09717		
		(G) F	CHANGE IN ACCORDANCE WITH CM 197541 TDRR 10688	28 MAY 64	BK MGM
		(H) G	CHANGE IN ACCORDANCE WITH CM 197689 TDRR 11270	23 JUN 64	JJJ
		(M) H	CHANGE IN ACCORDANCE WITH CM 197760 TDRR 11746	16 JUL 64	RJB
		J	CHANGE IN ACCORDANCE WITH CM 199022 TDRR 12184	30 JUL 64	JWB J.E.G.
		(N) K	REVISED & UPGRADED TO CLASS A PER TDRR 14941	21 DEC 64	JJJ CMT
		L	REPLACED WITH CHANGE BY REV (L) PER TDRR 20917	27 JUL 65	R. TATICHEK CF

Y2-64

(L) REPLACED WITH CHANGE BY REV (M)

REV																							
SHEET																							
REV STATUS OF SHEETS	REV	L	L	L	L	L	L	L	L	L	L	L	L										
	SHEET	1	2	3	4	5	6	7	8	9	10	11	12	13									

AC SPARK PLUG DIVISION, GMC
MILWAUKEE, WISCONSIN

ACSP PN

DRAWN Osgood DATE 12 NOV 63
CHECKED D. Hanning 26 NOV 63
APPROVAL D. Fitzpatrick 26 NOV 63
APPROVAL L. Goldman 1/3/64

NASA APPROVAL
MIT APPROVAL

CONTRACT

MANNED
SPACECRAFT CENTER
HOUSTON, TEXAS

CABLE, INTERCONNECT W49
ISS TESTING

CODE IDENT NO.	SIZE		REV
	A	1900996	L

SCALE NONE

SHEET 1 OF 13

GENERAL NOTES

NOTES

1 SEE CONDUCTOR CHART

2 SEE CONDUCTOR CHART

3 INTERPRET DRAWING IN ACCORDANCE WITH STANDARDS PRESCRIBED BY MIL-D-70327.

4 MARK CONDUCTOR IDENTIFICATION ON SINGLE CONDUCTORS PER ND1002019 OMITTING ALL SUFFIX LETTERS EXCEPT A AND B.

5 SPACING OF CONDUCTOR IDENTIFICATION SHALL BE EVERY 15 INCHES MAX AND AT EACH TERMINATION.

6 SPIRALLING OF THE MARKING IS ALLOWED.

7 IDENTIFY USING DRAWING NO. AND REVISION LETTER PER MIL-STD-130 (ES-267). .12 INCH HIGH CHARACTERS BLACK.

8 Y OR N IN TINNED COLUMN INDICATES YES OR NO.

9 A LETTER WITH AN ASTERISK SUFFIX, INDICATES A LOWER CASE LETTER.

10 VENDOR ITEM - SEE SPECIFICATION CONTROL DRAWING.

11 MARK IDENTIFICATION BAND WITH REFERENCE DESIGNATION AS NOTED .12 INCH HIGH COLOR BLACK, HOT IMPRESSION STAMPING PER ND1002019. CENTRALIZE.

MANNED SPACECRAFT CENTER HOUSTON, TEXAS	SIZE A	1900996
SCALE - NONE	REV LTR +	SHEET 2 OF 12

MIL 2084 4-63

GENERAL NOTES

NOTES

12 MARK SLEEVING WITH REFERENCE DESIGNATIONS AS SHOWN .12 INCH HIGH, COLOR BLACK PER ND1002019.

13 MARK SLEEVING OF MULTI-CONDUCTORS WITH THE CONDUCTOR NUMBER .12 INCH HIGH, COLOR BLACK, PER ND1002019 WHEN SLEEVING ITEM NUMBERS FOLLOW AN A OR T IN THE ACCESSORIES ITEM NUMBER FIELD.

14 A OR T PREFIX IN THE ACCESSORIES ITEM NUMBER COLUMN INDICATES THE READING POSITION AWAY FROM TERMINATION OR TOWARD TERMINATION RESPECTIVELY, OF THE WIRE MARKER SLEEVE.

15 THE SUFFIX LETTER OF A CONDUCTOR IDENTIFICATION NUMBER INDICATES CONDUCTOR SHIELDING, COLOR, OR MARKING.
- A - FROM END SHIELD
- L - WHITE WITH BLUE TRACER
- R - WHITE WITH RED TRACER

16 ASSEMBLE CONTACTS IN ALL CONNECTOR GROMMET HOLES.

17 SECURE TO CABLE USING ITEM 17, MARKING TO READ AWAY FROM CONNECTOR.

18 SEAL ZIPPER TUBING PER ND 1002153.

19 SERIALIZE PER ND 1002023.

20 ITEM 23 FURNISHED WITH ITEM 4.

MANNED SPACECRAFT CENTER HOUSTON, TEXAS	SIZE A	1900996
SCALE - NONE	REV LTR +	SHEET 3 OF 12

MIL 2084 4-63

FOR INFORMATION ONLY

CLASS B RELEASE TDR No. 05653 DATE 1/7/64

APPLICATION	
NEXT ASSY	USED ON
1901308	1900005-011

REVISIONS			
SYM	DESCRIPTION	DATE	APPROVAL
	-		

REV												
SHEET												
REV STATUS												
REV	+	+	+	+	+	+	+	+	+	+	+	+
OF SHEETS / SHEET	1	2	3	4	5	6	7	8	9	10	11	12

MANNED SPACECRAFT CENTER HOUSTON, TEXAS

AC SPARK PLUG DIVISION, GMC MILWAUKEE, WISCONSIN

ACSP PN

CABLE, INTERCONNECT W49 ISS TESTING

DRAWN Cazel 12 NOV 63 DATE
CHECKED N. Manning 26 NOV 63
APPROVAL N. Abraham 26 NOV 63
APPROVAL L. Adamson 1/8/64
NASA APPROVAL [illegible]
MIT APPROVAL [illegible] 1 Jan 64
CONTRACT

CODE IDENT NO. | SIZE A | 1900996 | REV +

SCALE NONE | SHEET 1 OF 12

GENERAL NOTES

TOLERANCE CHART, UNLESS OTHERWISE SPECIFIED ---

APPLICABLE LENGTH FOR WIRE OR CABLE, STRIP WIRE, STRIP JACKET, CUT WIRE OR CUT SHIELD	TOLERANCE				
	WIRE OR CABLE	STRIP WIRE	STRIP JACKET	CUT WIRE	CUT SHIELD
UNDER 1 INCH	+ .06-.00	+.03-.00	+.06-.06	+.06-.06	+.06-.06
1 INCH TO 6 INCHES	+ .50-.00	+.06-.00	+.25-.25	+.25-.25	+.25-.25
6 INCHES TO 6 FEET	+1.00-.00		+.50-.50	+.50-.50	+.50-.50
OVER 6 FEET	+2.00-.00				

MANNED SPACECRAFT CENTER HOUSTON, TEXAS	SIZE A	1900996
SCALE - NONE	REV LTR +	SHEET 4 OF 12

MIL 2084 4-63

INCHES 0 1 2
PHOTOGRAPHIC SCALE ONLY

LIST OF MATERIAL

SEE NOTE	ITEM	REQ'D	PART NUMBER	DESCRIPTION
10	17	216	1010464-2	CONNECTOR CONTACT SOCKET
	18	AR	MIL-T-713	LACING TAPE, TYPE P, CLASS 2, BLACK (ES 2732 NO.18)
	19	1	1900996-004	ZIPPER TUBING ND 1002155, TYPE 1, PLASTIC, FLEXIBLE, 5/8 DIA. 13 FT. TOTAL LENGTH.
	20	1	1900996-005	ZIPPER TUBING ND 1002155 TYPE 1, PLASTIC, FLEXIBLE, 3/8 DIA. 3 FT. TOTAL LENGTH.
	21	1	1900996-006	ZIPPER TUBING ND 1002155 TYPE 1, PLASTIC, FLEXIBLE, 1/2 DIA. 3 FT. TOTAL LENGTH.
	22	1	1016184-002	TRANSITION, HARNESS, 2 FINGER (Y) HEAT SHRINK
20	23	55		CONNECTION CONTACT, PIN

MANNED SPACECRAFT CENTER HOUSTON, TEXAS | SIZE A | 1900996
SCALE - NONE | REV LTR | SHEET 6 OF 12

MIL 2084 4-63

GJL CABLE W-49 + 1900996

CONDUCTOR NUMBER	ITEM NO. (2)	FROM: CUT WIRE OR SHIELD / STRIP WIRE OR JACKET / CIRCUIT POINT (2)	TIN (2)	TERMINATION SPEC. (1) / ITEM NO.	NO.	TO: CUT WIRE OR SHIELD / STRIP WIRE OR JACKET / CIRCUIT POINT (2)	TIN (2)	TERMINATION SPEC (1) / ITEM NO.	NO.
A 1	1	P1-B	22N	23		E3	37N		
A 2	1	P1-F	22N	23		P3- 12	22N	17	
A 3	1	P1-G	22N	23		P3- 13	22N	17	
A 4	1	P1-H	22N	23		P3- 91	22N	17	
A 5	3		23Q 200	9 10 / A 11	5		23Q 200	A 11	7A
A 5A	1	SHLD A5	37N			E1	37N		
A 5L		P1-N	22N	23		P3-108	22N	17	
A 5R		P1-M	22N	23		P3-106	22N	17	
A 6	3		23Q 200	9 10 / A 11	5		23Q 200	A 11	7A
A 6A	1	SHLD A6	37N			E1	37N		
A 6L		P1-R	22N	23		P3-107	22N	17	
A 6R		P1-P	22N	23		P3- 93	22N	17	
A 7	2		23Q 200	7 8 / A 11	5		23Q 200	A 12	7A
A 7A	1	SHLD A7	37N			E1	37N		
A 7W		P1-S	22N	23		P3- 10	22N	17	

(1) THE STD CONDUCTOR TERMINATION FIGURES ARE PER
(2) DIMENSIONS ARE IN INCHES AND TWO PLACE DECIMALS.

MANNED SPACECRAFT CENTER HOUSTON, TEXAS | SIZE A | 1900996
SCALE - NONE | REV LTR + | SHEET 7 OF 12

MIL 2085 - 4-63 WIR

LIST OF MATERIAL

SEE NOTE	ITEM	REQ'D	PART NUMBER	DESCRIPTION
	1	1	1900996-001	WIRE ND 1002181 TYPE 1 CLASS 1 22 AWG WHT 345 FT TOTAL LENGTH
	2	1	1900996-002	WIRE ND 1002181 TYPE 1 CLASS 4 22 AWG WHT JAKT WHT, 96 FT. TOTAL LENGTH.
	3	1	1900996-003	WIRE ND 1002181 TYPE 2 CLASS 4 22 AWG WHT JAKT WHT/RED, WHT/BLU 112 FT TOTAL LENGTH
16	4	1	MS3126F-22-55P	(1897045-550) CONNECTOR
10,16	5	1	1010411-1	CONNECTOR
10,16	6	1	1010607-1	CONNECTOR
10	7	7	1000243-3	FERRULE, ELECT. COND.
10	8	7	1000242-2	FERRULE, ELECT. COND.
10	9	7	1000243-8	FERRULE, ELECT. COND.
10	10	7	1000242-7	FERRULE, ELECT. COND.
10	11	21	1010490-198	INSULATION, SLEEVING, ELECT.
10	12	7	1010490-200	INSULATION, SLEEVING, ELECT.
10	13	3	1010490-258	INSULATION, SLEEVING, ELECT.
10	14	1	1016128-011	BAND IDENTIFICATION
10	15	3	1016128-041	BAND IDENTIFICATION
10	16	3	1016006-002	SPLICE REDUCER

MANNED SPACECRAFT CENTER HOUSTON, TEXAS | SIZE A | 1900996
SCALE - NONE | REV LTR + | SHEET 5 OF 12

MIL 2084 4-63

GJL CABLE W-49 + 1900996

CONDUCTOR NUMBER	ITEM NO. (2)	FROM: CUT WIRE OR SHIELD / STRIP WIRE OR JACKET / CIRCUIT POINT (2)	TIN (2)	TERMINATION SPEC. (1) / ITEM NO.	NO.	TO: CUT WIRE OR SHIELD / STRIP WIRE OR JACKET / CIRCUIT POINT (2)	TIN (2)	TERMINATION SPEC (1) / ITEM NO.	NO.
A 8	2		23Q 200	7 8 / A 11	5		23Q 200	A 12	7A
A 8A	1	SHLD A8	37N			E1	37N		
A 8W		P1-T	22N	23		P3- 24	22N	17	
A 9	3		28Q 250	9 10 / A 11	5		28Q 250	A 11	7A
A 9A	1	SHLD A9	37N			E1	37N		
A 9L		P1-V	22N	23		P3- 68	22N	17	
A 9R		P1-U	22N	23		P3- 69	22N	17	
A 10	3		28Q 250	9 10 / A 11	5		28Q 250	A 11	7A
A 10A	1	SHLD A10	37N			E2	37N		
A 10L		P1-B*	22N	23		P2- 2	22N	17	
A 10R		P1-A*	22N	23		P2- 1	22N	17	
A 11	3		28Q 250	A 9 / 10 11	5		28Q 250	A 11	7A
A 11A	1	SHLD A11	37N			E2	37N		
A 11L		P1-D*	22N	23		P2- 15	22N	17	

(1) THE STD CONDUCTOR TERMINATION FIGURES ARE PER
(2) DIMENSIONS ARE IN INCHES AND TWO PLACE DECIMALS.

MANNED SPACECRAFT CENTER HOUSTON, TEXAS | SIZE A | 1900996
SCALE - NONE | REV LTR + | SHEET 8 OF 12

MIL 2085 - 4-63 WIR

INCHES 0 1 2
PHOTOGRAPHIC SCALE ONLY

GJL CABLE W-49 + 1900996

CONDUCTOR NUMBER	INDIVIDUAL LENGTH ITEM NO. (2)		FROM CUT WIRE OR SHIELD STRIP WIRE OR JACKET CIRCUIT POINT (2)	T I N (2)	TERMINATION SPEC. (1) ITEM NO.	NO.	TO CUT WIRE OR SHIELD STRIP WIRE OR JACKET CIRCUIT POINT (2)	T I N (2)	TERMINATION SPEC (1) ITEM NO.	NO.
A 21	1		P1-R*	22N	23		P2- 12	22N	17	
A 22	1		P1-S*	22N	23		P2- 18	22N	17	
A 23	1		P1-T*	22N	23		P2- 6	22N	17	
A 24	1		P1-U*	22N	23		P2- 34	22N	17	
A 25	1		P1-V*	22N	23		P2- 93	22N	17	
A 26	1		P1-W*	22N	23		P2- 78	22N	17	
A 27	2			330 300	7 8			330 300	A 12	7A
					A 11					
A 27A	1		SHLD A27	37N			E2	37N		
A 27W			P1-X*	22N	23		P2-104	22N	17	
A 28	1		P1-Y*	22N	23		P2- 56	22N	17	
A 29	2			330N 300	A 7	5		330 300	A 12	7A
					8 11					
A 29A	1		SHLD A29	37N			E3	37N		
A 29W			P1-Z*	22N	23		P2- 92	22N	17	
A 30	1		P1-AA	22N	23		P2- 35	22N	17	
A 31	1		P1-BB	22N	23		P2- 36	22N	17	
A 32	2			330 300	7 8	5		330 300	A 12	7A

(1) THE STD CONDUCTOR TERMINATION FIGURES ARE PER
(2) DIMENSIONS ARE IN INCHES AND TWO PLACE DECIMALS.

MANNED SPACECRAFT CENTER HOUSTON, TEXAS | SIZE A | 1900996
SCALE-NONE | REV LTR + | SHEET 10 OF 12

MIL 2085 - 4-63 WIR

GJL CABLE W-49 + 1900996

CONDUCTOR NUMBER	INDIVIDUAL LENGTH ITEM NO. (2)		FROM CUT WIRE OR SHIELD STRIP WIRE OR JACKET CIRCUIT POINT (2)	T I N (2)	TERMINATION SPEC. (1) ITEM NO.	NO.	TO CUT WIRE OR SHIELD STRIP WIRE OR JACKET CIRCUIT POINT (2)	T I N (2)	TERMINATION SPEC (1) ITEM NO.	NO.
					A 11					
A 32A	1		SHLD A32	37N			E3	37N		
A 32W			P1-CC	22N	23		P2-105	22N	17	
A 33	1		P1-DD	22N	23		P2- 37	22N	17	
A 34	1		P1-EE	22N	23		P2- 23	22N	17	
A 35	2			380 350	7 8	5		380 350	A 12	7A
					A 11					
A 35A	1		SHLD A35	37N			E3	37N		
A 35W			P1-FF	22N	23		P2- 94	22N	17	
A 36	2			380 350	7 8	5		380 350	A 12	7A
					A 11					
A 36A	1		SHLD A36	37N			E3	37N		
A 36W			P1-GG	22N	23		P2- 22	22N	17	
A 37	1		P1-HH	22N	23		P2- 24	N	17	
A 38	1		E1	37N			E2	37N		
A 39	1		E2	37N			E3	37N		

(1) THE STD CONDUCTOR TERMINATION FIGURES ARE PER
(2) DIMENSIONS ARE IN INCHES AND TWO PLACE DECIMALS.

MANNED SPACECRAFT CENTER HOUSTON, TEXAS | SIZE A | 1900996
SCALE-NONE | REV LTR + | SHEET 11 OF 12

MIL 2085 - 4-63 WIR

GJL CABLE W-49 + 1900996

CONDUCTOR NUMBER	INDIVIDUAL LENGTH ITEM NO. (2)		FROM CUT WIRE OR SHIELD STRIP WIRE OR JACKET CIRCUIT POINT (2)	T I N (2)	TERMINATION SPEC. (1) ITEM NO.	NO.	TO CUT WIRE OR SHIELD STRIP WIRE OR JACKET CIRCUIT POINT (2)	T I N (2)	TERMINATION SPEC (1) ITEM NO.	NO.
A 11R			P1-C*	24N	23		P2- 14	22N	17	
A 12	3			280 250	9 10	5		280 250	A 11	7A
					A 11					
A 12A	1		SHLD A12	37N			E2	37N		
A 12L			P1-F*	22N	23		P2- 28	22N	17	
A 12R			P1-E*	22N	23		P2- 29	22N	17	
A 13	3			330 300	9 10	5		330 300	A 11	7A
					A 11					
A 13A	1		SHLD A13	37N			E2	37N		
A 13L			P1-H*	22N	23		P2-107	22N	17	
A 13R			P1-G*	22N	23		P2-108	22N	17	
A 14	1		P1-I*	22N	23		P2- 9	22N	17	
A 15	1		P1-J*	22N	23		P2- 25	22N	17	
A 16	1		P1-K*	22N	23		P2- 79	22N	17	
A 17	1		P1-M*	22N	23		P2- 68	22N	17	
A 18	1		P1-N*	22N	23		P2- 69	22N	17	
A 19	1		P1-P*	22N	23		P2- 81	22N	17	
A 20	1		P1-Q*	22N	23		P2- 46	22N	17	

(1) THE STD CONDUCTOR TERMINATION FIGURES ARE PER
(2) DIMENSIONS ARE IN INCHES AND TWO PLACE DECIMALS.

MANNED SPACECRAFT CENTER HOUSTON, TEXAS | SIZE A | 1900996
SCALE-NONE | REV LTR + | SHEET 9 OF 12

MIL 2085 - 4-63 WIR

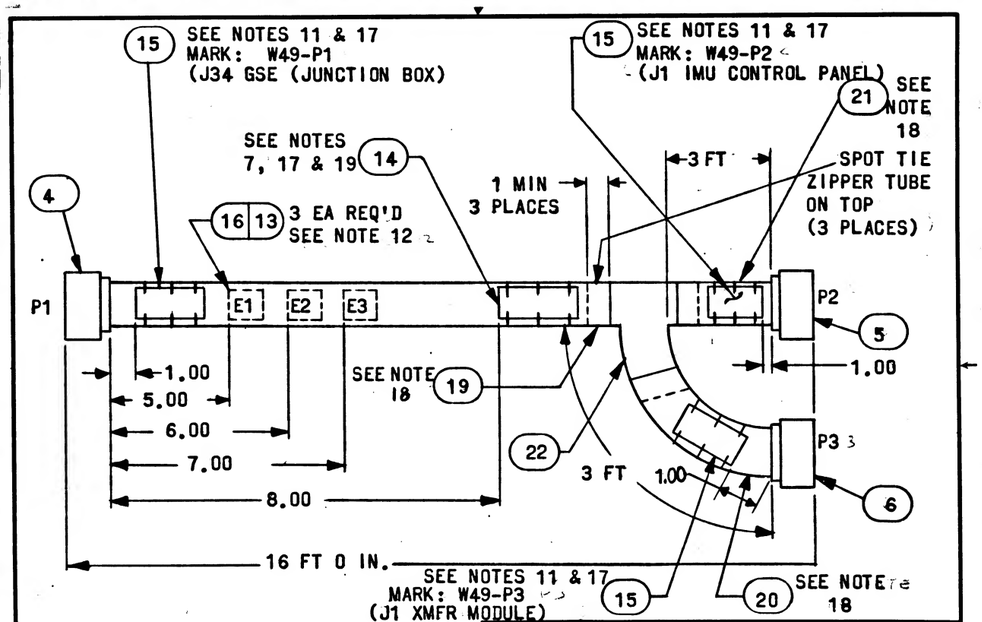

LOCATION TOLERANCE (EXCEPT LENGTH):
+.50
-.50

MANNED SPACECRAFT CENTER HOUSTON, TEXAS | SIZE A | 1900996
SCALE-NONE | REV LTR | SHEET 12 OF 12

MIL 2084 4-63

INCHES 0 1 2
PHOTOGRAPHIC SCALE ONLY

APPLICATION		REVISIONS			
NEXT ASSY	USED ON	SYM	DESCRIPTION	DATE	APPROVAL
1901308	1900005-011	A	CHANGE IN ACCORDANCE WITH CM 193775	19 FEB 64	RJF
		B	CHANGE IN ACCORDANCE WITH CM193776	20 FEB 64	SA
		C	CHANGE IN ACCORDANCE WITH CM 195380	12 MAR 64	RGL
		D	CHANGE IN ACCORDANCE WITH CM 196264	9 APR 64	JWP
			ADDED CUSTOMER DATA (V2-64)		
		E	CHANGE IN ACCORDANCE WITH CM 196857 89056	15 MAY 64	JJJ

FOR INFORMATION ONLY

CLASS B RELEASE TDR No. 05653 DATE 1/7/64

REV											
SHEET											
REV STATUS OF SHEETS	REV	E	D	D	A	E	C	E			
	SHEET	1	2	3	4	5	6	7			

AC SPARK PLUG DIVISION, GMC MILWAUKEE, WISCONSIN	MANNED SPACECRAFT CENTER HOUSTON, TEXAS
ACSP PN	CABLE INTERCONNECT W59 G&N TESTING
DRAWN Wiesert 11-NOV-63	
CHECKED Manning DATE 20 NOV 63	
APPROVAL 20 NOV 63	
APPROVAL Schuman 1/3/64	
NASA APPROVAL	CODE IDENT NO. / SIZE A / 1900997 / REV E
MIT APPROVAL	
CONTRACT NAS9-497	SCALE NONE / SHEET 1 OF 7

PENNANT NO. GENERAL NOTES CABLE W-59 A 1900997

NOTE

1. A GRT PREFIX IN THE ACCESSORIES ITEM NUMBER COLUMN INDICATES THE READING POSITION AWAY FROM TERMINATION ON TOWARD TERMINATION RESPECTIVELY, OF THE WIRE MARKER SLEEVE.
2. THE SUFFIX LETTER OF A CONDUCTOR IDENTIFICATION NUMBER INDICATES CONDUCTOR SHIELDING COLOR, OR MARKING. A - FROM END SHIELD
3. SOLDER PER MIL-STD-440 USING ITEMS 6 AND 7.
4. SECURE TO CABLE USING ITEM 6; MARKING TO READ AWAY FROM CONNECTOR.
5. SEAL ZIPPER TUBING PER ND1002159
6. SERVICIZE PER ND1002159
7. ITEM 6 FURNISHED WITH ITEM 5
8. ITEM 13 FURNISHED WITH ITEM 5.
9. ASSEMBLE CONTACTS TO ALL CONNECTOR GROMMET HOLES.
10. SEE NOTES 10 AND 22.

MANNED SPACECRAFT CENTER HOUSTON, TEXAS	SIZE A / 1900997
SCALE-NONE	REV LTR A / SHEET 1 OF 7

PENNANT NO. GENERAL NOTES CABLE W-59 A 1900997

NOTE

1. SEE CONDUCTOR CHART, PENNANT NOTE 2.
2. INTERPRET DRAWING IN ACCORDANCE WITH STANDARDS PRESCRIBED BY MIL-D-10322.
3. MARK CONDUCTOR IDENTIFICATION ON SINGLE CONDUCTORS PER ND1002019 OMITTING ALL SUFFIX LETTERS EXCEPT A AND B.
4. SPACING OF CONDUCTOR IDENTIFICATION SHALL BE EVERY 15 INCHES MAX AND AT EACH TERMINATION.
5. SPIRALLING OF THE MARKING IS ALLOWED.
6. IDENTIFY USING DRAWING NO. AND REVISION LETTER PER MIL-STD-100 (NE-267), .12 INCH MAGH CHARACTERS WHITE.
7. G & N IN TINNED COPPER INDICATES YES OR NO.
8. A LETTER WITH AN ASTERISK SUFFIX INDICATES A LOWER CASE LETTER.
9. VENDOR ITEM - SEE SPECIFICATION CONTROL DRAWING.
10. MARK IDENTIFICATION BAND WITH REFERENCE DESIGNATION AS NOTED .12 INCH HIGH COLOR WHITE, HOT IMPRESSION STAMPING PER ND1002019.
11. REVISIONS.
12. MARK SLEEVING WITH REFERENCE DESIGNATIONS AS SHOWN .12 INCH HIGH, COLOR BLACK PER ND1002019.
13. MARK SLEEVING OF MULTI-CONDUCTORS WITH THE CONDUCTOR NUMBER .12 INCH HIGH, COLOR BLACK, PER ND1002019 WHEN SLEEVING ITEM NUMBERS 1 BELOW AN X OR Z IN THE ACCESSORIES ITEM NUMBER FIELD.

MANNED SPACECRAFT CENTER HOUSTON, TEXAS	SIZE A / 1900997
SCALE-NONE	REV LTR B / SHEET 2 OF 7

PENNANT NO. GENERAL NOTES CABLE W-59 A 1900997

NOTE

14. TOLERANCE ON CABLE LENGTH UNLESS OTHERWISE SPECIFIED —

APPROXIMATE LENGTH OF CABLE	TOLERANCE
STRIP WIRE, STRIP JACKET, CUT WIRE OR CUT SHIELD	WIRE SPLICE / CUT WIRE / JACKET / SHIELD
CABLE	WIRE / JACKET / SHIELD
UNDER 1 INCH	+.00-.03 / +.00-.00 / +.04-.04 / +.06-.06
1 INCH TO 4 INCHES	+.10-.00 / +.06-.00 / +.25-.25 / +.25-.25
4 INCHES TO 6 FEET	+1.00-.00 / +.50-.50 / +.50-.50 / +.50-.50
OVER 6 FEET	+2.00-.00

MANNED SPACECRAFT CENTER HOUSTON, TEXAS	SIZE A / 1900997
SCALE-NONE	REV LTR A / SHEET 4 OF 7

LIST OF MATERIALS

PENNANT NOTE	ITEM	QTY	PART NO	DESCRIPTION
	1	1	1900997-001	WIRE, ND1002181 TYPE 1, CLASS 1, 12AWG, WHT, 112 FT 0 IN. TOTAL LENGTH
	2	1	1900997-002	WIRE, ND1002181 TYPE 1, CLASS 1, 14AWG, WHT, 32 FT 0 IN. TOTAL LENGTH
	3	1	1900997-003	WIRE, ND1002181 TYPE 1, CLASS 1, 16AWG, WHT, 32 FT 0 IN. TOTAL LENGTH
	4	1	MS3106R-36-9PW (1897126-091)	CONNECTOR, PLUG, ELEC.
23	5	1	1016181-002	CONNECTOR, PLUG, ELEC
	6	AR	QQ-S-571	SOLDER SN60 (ES-2175 ALLOY 1)
	7	AR	QQ-S-571	FLUX TYPE AR (ES-2175 TYPE 1 OR 2) OR MIL-F-14256 FLUX (ES-2798)
	8	AR	MIL-T-713	LACING TAPE, TYPE P CLASS 2, BLACK (ES-2732 NO. 18)
	9	1	1900997-004	ZIPPER TUBING, ND1002155 TYPE 1 PLASTIC, FLEXIBLE, 3/4 DIA X 16 FT 0 IN. TOT. LG
10	10	2	1016128-011	IDENTIFICATION BAND
10	11	1	1016128-041	IDENTIFICATION BAND
20	12	4		CONNECTOR CONTACTS, SOCKET NO. 16
21	13	10		CONNECTOR CONTACTS, SOCKET NO. 12
	14			DELETED (1016237-280)
	15			DELETED (1016237-360)

MANNED SPACECRAFT CENTER HOUSTON, TEXAS	SIZE A	1900997	
SCALE - NONE	REV LTR E		SHEET 5 OF 7

CONDUCTOR NUMBER	INDIVIDUAL LENGTH ITEM NO.		FROM CUT WIRE OR SHIELD STRIP WIRE OR JACKET CIRCUIT POINT			TERMINATION SPEC.	ITEM NO.	NO.	TO CUT WIRE OR SHIELD STRIP WIRE OR JACKET CIRCUIT POINT			TERMINATION SPEC.	ITEM NO.	NO.	
A 1	3		P1-D	25Y					P2-M	25N			13		
A 2	1		P1-I	37Y					P2-B	25N			13		
A 3	1		P1-J	37Y					P2-C	25N			13		
A 4	2		P1-K	37Y					P2-H	25N			13		
A 5	2		P1-M	37Y					P2-A	25N			13		
A 6	1		P1-S	37Y					P2-D	25N			13		
A 7	1		P1-T	37Y					P2-E	25N			13		
A 8	1		P1-H	25Y					P2-F	25N			13		
A 9	1		P1-U	37Y					P2-G	25N			13		
A 10	1		P1-V	37Y					P2-J	25N			13		
A 11	3		P1-X	37N					P2-L	25N					

1. THE STD CONDUCTOR TERMINATION FIGURES ARE PER
2. DIMENSIONS ARE IN INCHES AND TWO PLACE DECIMALS.

MANNED SPACECRAFT CENTER HOUSTON, TEXAS	SIZE A	1900997	
SCALE - NONE	REV LTR		SHEET 6 OF 7

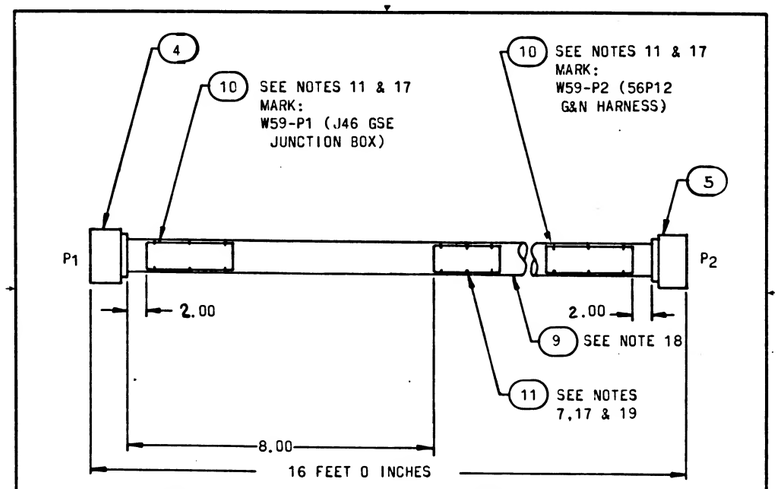

LOCATION TOLERANCE
(EXCEPT LENGTH)
+.50 -.50

MANNED SPACECRAFT CENTER HOUSTON, TEXAS	SIZE A	1900997	
SCALE - NONE	REV LTR E		SHEET 7 OF 7

GENERAL NOTES

NOTES

1 SEE CONDUCTOR CHART
2 SEE CONDUCTOR CHART
3 INTERPRET DRAWING IN ACCORDANCE WITH STANDARDS PRESCRIBED BY MIL-D-70327.
4 MARK CONDUCTOR IDENTIFICATION ON SINGLE CONDUCTORS PER ND1002019 OMITTING ALL SUFFIX LETTERS EXCEPT A AND B.
5 SPACING OF CONDUCTOR IDENTIFICATION SHALL BE EVERY 15 INCHES MAX AND AT EACH TERMINATION.
6 SPIRALLING OF THE MARKING IS ALLOWED.
7 IDENTIFY USING DRAWING NO. AND REVISION LETTER PER MIL-STD-130 (ES-267). .12 INCH HIGH CHARACTERS BLACK.
8 Y OR N IN TINNED COLUMN INDICATES YES OR NO.
9 A LETTER WITH AN ASTERISK SUFFIX, INDICATES A LOWER CASE LETTER.
10 VENDOR ITEM - SEE SPECIFICATION CONTROL DRAWING.
11 MARK IDENTIFICATION BAND WITH REFERENCE DESIGNATION AS NOTED .12 INCH HIGH COLOR BLACK, HOT IMPRESSION STAMPING PER ND1002019. CENTRALIZE.

MANNED SPACECRAFT CENTER HOUSTON, TEXAS	SIZE A	1900997
SCALE - NONE	REV LTR +	SHEET 2 OF 7

MIL 2084 4-63

GENERAL NOTES

NOTES

12 MARK SLEEVING WITH REFERENCE DESIGNATIONS AS SHOWN .12 INCH HIGH, COLOR BLACK PER ND1002019.
13 MARK SLEEVING OF MULTI-CONDUCTORS WITH THE CONDUCTOR NUMBER .12 INCH HIGH, COLOR BLACK, PER ND1002019 WHEN SLEEVING ITEM NUMBERS FOLLOW AN A OR T IN THE ACCESSORIES ITEM NUMBER FIELD.
14 A OR T PREFIX IN THE ACCESSORIES ITEM NUMBER COLUMN INDICATES THE READING POSITION AWAY FROM TERMINATION OR TOWARD TERMINATION RESPECTIVELY, OF THE WIRE MARKER SLEEVE.
15 THE SUFFIX LETTER OF A CONDUCTOR IDENTIFICATION NUMBER INDICATES CONDUCTOR SHIELDING, COLOR, OR MARKING.
A - FROM END SHIELD
16 SOLDER PER MIL-STD-440 USING ITEM 6 AND ITEM 7.
17 SECURE TO CABLE USING ITEM 8. MARKING TO READ AWAY FROM CONNECTOR.
18 SEAL ZIPPER TUBING PER ND 1002153.
19 SERIALIZE PER ND 1002023.
20 ITEM 12 FURNISHED WITH ITEM 5
21 ITEM 13 FURNISHED WITH ITEM 5
22 ASSEMBLE CONTACTS TO ALL CONNECTOR GROMMET HOLES.

MANNED SPACECRAFT CENTER HOUSTON, TEXAS	SIZE A	1900997
SCALE - NONE	REV LTR +	SHEET 3 of 7

MIL 2084 4-63

FOR INFORMATION ONLY

CLASS B RELEASE TDR No. 05653 DATE 1/7/64

REVISIONS

DESCRIPTION	DATE	APPROVAL

APPLICATION

NEXT ASSY	USED ON	SYM
1901308	1900005-011	

REV	+	+	+	+	+	+
SHEET	1	2	3	4	5	6
REV STATUS	+	+	+	+	+	+
OF SHEETS	7					

MANNED SPACECRAFT CENTER HOUSTON, TEXAS

CABLE INTERCONNECT W59
G&N TESTING

AC SPARK PLUG DIVISION, GMC
MILWAUKEE, WISCONSIN

ACSP PN

DRAWN Wesiuit 11-NOV-63
CHECKED Mann 20 NOV 63
APPROVAL D. Ahrlam 20 NOV 63
APPROVAL J. Johnson 1/3/64
NASA APPROVAL [illegible]
MIT APPROVAL [illegible] Jan 64

CODE IDENT NO. 1900997 SIZE A REV +
SCALE NONE SHEET 1 OF 7
CONTRACT NAS9-497

GENERAL NOTES

TOLERANCE CHART, UNLESS OTHERWISE SPECIFIED ---

APPLICABLE LENGTH FOR WIRE OR CABLE, STRIP WIRE, STRIP JACKET, CUT WIRE OR CUT SHIELD	TOLERANCE				
	WIRE OR CABLE	STRIP WIRE	STRIP JACKET	CUT WIRE	CUT SHIELD
UNDER 1 INCH	+ .06-.00	+.03-.00	+.06-.06	+.06-.06	+.06-.06
1 INCH TO 6 INCHES	+ .50-.00	+.06-.00	+.25-.25	+.25-.25	+.25-.25
6 INCHES TO 6 FEET	+1.00-.00		+.50-.50	+.50-.50	+.50-.50
OVER 6 FEET	+2.00-.00				

MANNED SPACECRAFT CENTER HOUSTON, TEXAS	SIZE A	1900997
SCALE - NONE	REV LTR +	SHEET 4 of 7

MIL 2084 4-63

INCHES 0 1 2
PHOTOGRAPHIC SCALE ONLY

LIST OF MATERIAL

SEE NOTE	ITEM	REQ'D	PART NUMBER	DESCRIPTION
	1	1	1900997-1	WIRE, ND 1002181 TYPE 1, CLASS 1, 12 AWG, WHT, 112 FT-0 IN. TOTAL LENGTH
	2	1	1900997-2	WIRE, ND 1002181 TYPE 1, CLASS 1, 14 AWG, WHT, 32 FT-0 IN. TOTAL LENGTH
	3	1	1900997-3	WIRE, ND 1002181 TYPE 1, CLASS 1, 16 AWG, WHT, 16 FT-0 IN. TOTAL LENGTH
	4	1	MS3106R-36-9PW	(1897126-091) CONNECTOR, PLUG, ELEC.
22,10	5	1	1016181-002	CONNECTOR, PLUG, ELEC
	6	AR	QQ-S-571	SOLDER SN60 (ES2175 ALLOY 1)
	7	AR	QQ-S-571	FLUX TYPE AR (ES2175 TYPE 1 OR 2) OR MIL-F-14256 FLUX (ES-2798)
	8	AR	MIL-T-713	LACING TAPE, TYPE P CLASS 2, BLACK (ES-2732 NO. 18)
	9	1	1900997-4	ZIPPER TUBING, ND 1002155 TYPE 1 PLASTIC, FLEXIBLE, 3/4 DIA X 16 FT-0IN. TOT. LENGTH
10	10	2	1016128-011	IDENTIFICATION BAND
10	11	1	1016128-041	IDENTIFICATION BAND
20	12	4		CONNECTOR CONTACTS, SOCKET NO. 16
21	13	10		CONNECTOR CONTACTS, SOCKET NO. 12

MANNED SPACECRAFT CENTER HOUSTON, TEXAS	SIZE A	1900997
SCALE - NONE	REV LTR +	SHEET 5 of 7

MIL 2084 4-63

GJJ CABLE W-59 + 1900997

CONDUCTOR INDIVIDUAL LENGTH NUMBER	ITEM NO.	3	FROM CUT WIRE OR SHIELD STRIP WIRE OR JACKET CIRCUIT POINT	2	TIN	3	TERMINATION SPEC. 1 ITEM NO.	NO.	TO CUT WIRE OR SHIELD STRIP WIRE OR JACKET CIRCUIT POINT	2	TIN	3	TERMINATION SPEC 1 ITEM NO.	NO.
A 1	3		P1-D	25	Y				P2-M	25	N		12	
A 2	1		P1-I	37	Y				P2-B	25	N		13	
A 3	1		P1-J	37	Y				P2-C	25	N		13	
A 4	2		P1-K	37	Y				P2-H	25	N		13	
A 5	2		P1-M	37	Y				P2-A	25	N		13	
A 6	1		P1-S	37	Y				P2-D	25	N		13	
A 7	1		P1-T	37	Y				P2-E	25	N		13	
A 8	1		P1-H	25	Y				P2-F	25	N		13	
A 9	1		P1-U	37	Y				P2-G	25	N		13	
A 10	1		P1-V	37	Y				P2-J	25	N		13	

1 THE STD CONDUCTOR TERMINATION FIGURES ARE PER
2 DIMENSIONS ARE IN INCHES AND TWO PLACE DECIMALS.

MANNED SPACECRAFT CENTER HOUSTON, TEXAS	SIZE A	1900997
SCALE - NONE	REV LTR +	SHEET 6 OF 7

MIL 2085 - 4-63 WIR

PHOTOGRAPHIC SCALE ONLY
0 1 2 INCHES

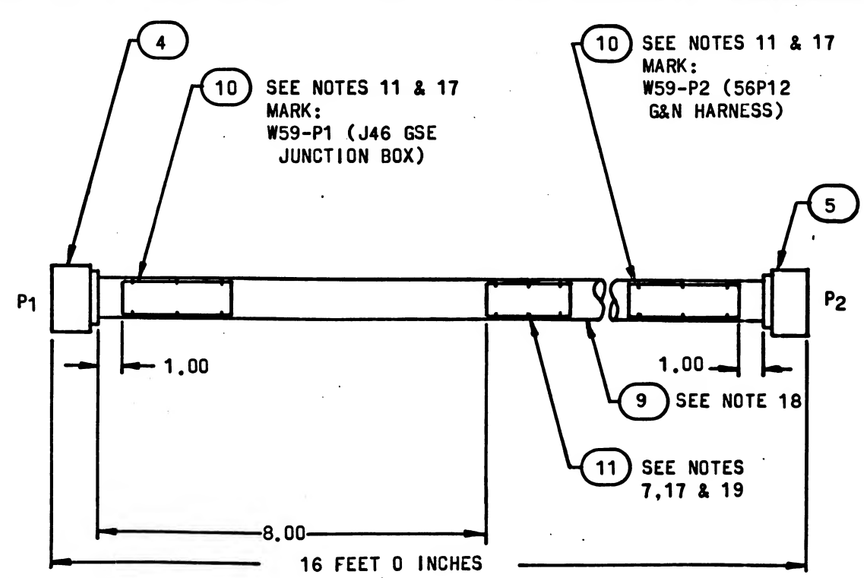

LOCATION TOLERANCE
(EXCEPT LENGTH)
+.50 -.50

MANNED SPACECRAFT CENTER HOUSTON, TEXAS	SIZE A	1900997
SCALE - NONE	REV LTR +	SHEET 7 OF 7

MIL 2084 4-63

PENNANT GENERAL NOTES

NOTE

1 SEE CONDUCTOR CHART, PENNANT NOTE 1.

2 SEE CONDUCTOR CHART, PENNANT NOTE 2.

3 INTERPRET DRAWING IN ACCORDANCE WITH STANDARDS PRESCRIBED BY MIL-D-70327.

4 MARK CONDUCTOR IDENTIFICATION ON SINGLE CONDUCTORS PER ND1002019 OMITTING ALL SUFFIX LETTERS EXCEPT A AND B.

5 SPACING OF CONDUCTOR IDENTIFICATION SHALL BE EVERY 15 INCHES MAX. AND AT EACH TERMINATION.

6 SPIRALLING OF THE MARKING IS ALLOWED.

7 IDENTIFY USING DRAWING NO. AND REVISION LETTER PER MIL-STD-130 (ES-267). .12 INCH HIGH CHARACTERS WHITE.

8 Y OR N IN TINNED COLUMN INDICATES YES OR NO.

9 A LETTER WITH AN ASTERISK SUFFIX, INDICATES A LOWER CASE LETTER.

10 VENDOR ITEM - SEE SPECIFICATION CONTROL DRAWING.

11 MARK IDENTIFICATION BAND WITH REFERENCE DESIGNATION AS NOTED .12 INCH HIGH COLOR WHITE, HOT IMPRESSION STAMPING PER ND1002019. CENTRALIZE.

12 MARK SLEEVING WITH REFERENCE DESIGNATIONS AS SHOWN .12 INCH HIGH, COLOR BLACK PER ND1002019.

13 MARK SLEEVING OF MULTI-CONDUCTORS WITH THE CONDUCTOR NUMBER .12 INCH HIGH, COLOR BLACK, PER ND1002019 WHEN SLEEVING ITEM NUMBERS FOLLOW AN A OR T IN THE ACCESSORIES ITEM NUMBER FIELD.

MANNED SPACECRAFT CENTER HOUSTON, TEXAS	SIZE A	1900998	
SCALE - NONE	REV LTR B		SHEET 2 OF 20

PENNANT GENERAL NOTES

NOTE

TOLERANCE CHART, UNLESS OTHERWISE SPECIFIED ---

APPLICABLE LENGTH FOR WIRE OR CABLE, STRIP WIRE, STRIP JACKET, CUT WIRE OR CUT SHIELD.	TOLERANCE				
	WIRE OR CABLE	WIRE	STRIP JACKET	WIRE	CUT SHIELD
UNDER 1 INCH	+ .06-.00	+.03-.00	+.06-.06	+.06-.06	+.06-.06
1 INCH TO 6 INCHES	+ .50-.00	+.06-.00	+.25-.25	+.25-.25	+.25-.25
6 INCHES TO 6 FEET	+1.00-.00		+.50-.50	+.50-.50	+.50-.50
OVER 6 FEET	+2.00-.00				

MANNED SPACECRAFT CENTER HOUSTON, TEXAS	SIZE A	1900998	
SCALE - NONE	REV LTR B		SHEET 4 OF 20

PENNANT GENERAL NOTES

NOTE

14 A ON 7 DRESS IN THE ACCESSORIES ITEM NUMBER COLUMN INDICATES THE READING POSITION AWAY FROM TERMINATION OR TOWARD TERMINATION RESPECTIVELY, OF THE WIRE MARKER SLEEVE.

15 THE SUFFIX LETTER OF A CONDUCTOR IDENTIFICATION NUMBER INDICATES CONDUCTOR SHIELDING, COLOR, OR MARKING.
- A - FROM END SHIELD
- L - WHITE WITH BLUE TRACER OR WHITE WITH LETTER L.
- R - WHITE WITH RED TRACER OR WHITE WITH LETTER R.
- Y - WHITE WITH YELLOW TRACER

16 ASSEMBLE CONTACTS IN ALL CONNECTOR GROMMET HOLES.

17 SECURE TO CABLE USING ITEM 22, MARKING TO READ AWAY FROM CONNECTOR.

18 SEAL ZIPPER TUBING PER ND1002153

19 SERIALIZE PER ND1002023

20 ITEM 27 FURNISHED WITH ITEM 6

21 ITEM 28 FURNISHED WITH ITEM 7

22 ITEM 30 SHALL BE SHORTENED WHEN NECESSARY TO AVOID INTERFERENCE WITH FERRULES AND MAY BE CUT LENGTHWISE ON ONE SIDE. SELECT ONE OR MORE OF ITEM 30 AS REQUIRED TO FIT.

MANNED SPACECRAFT CENTER HOUSTON, TEXAS	SIZE A	1900998	
SCALE - NONE	REV LTR B		SHEET 3 OF 20

FOR INFORMATION ONLY

CLASS B RELEASE TDR No. 05653 DATE 1/1/69

REVISIONS

SYM	DESCRIPTION	DATE	APPROVAL
A	CHANGE IN ACCORDANCE WITH CM193777	4 FEB 64	GG / PZ
B	CHANGE IN ACCORDANCE WITH CM195032	3 MAR 64	J.J. / CP
C	CHANGE IN ACCORDANCE WITH CM 200712. REVISED CUSOMER DATA Q2-64	2 APR 64	JMW / WEW
D	CHANGE IN ACCORDANCE WITH CM 196300 10030	27 MAY 64	R.B. / CP

APPLICATION

NEXT ASSY	USED ON
1901208	1900005-011

REV SHEET: 0 0 0 0 C B B B B B B B D

REV STATUS: REV / OF SHEETS: 12 | SHEET: 1 2 3 4 5 6 7 8 9 10 11 12 13 14 15 16 17 18 19 20

AC SPARK PLUG DIVISION, GMC
MILWAUKEE, WISCONSIN

ACSP PN

MANNED SPACECRAFT CENTER
HOUSTON, TEXAS

CABLE, INTERCONNECT W58
ISS, OSS TESTING

DRAWN WEISSERT DATE 11-NOV-63
CHECKED DATE 27 NOV 63
APPROVAL DATE
APPROVAL DATE

CODE IDENT NO. | SIZE A | 1900998 | REV D

NASA APPROVAL
MIT APPROVAL
CONTRACT
SCALE
SHEET 1 OF 20

PENNANT LIST OF MATERIALS

NOTE	ITEM	QTY	PART NO	DESCRIPTION
	1	1	1900998-001	WIRE ND1002181, TYPE 1, CLASS 1, WHT, NO. 22AWG 620 FT.+ 0 IN. TOTAL LENGTH.
	2	1	1900998-002	WIRE ND1002181, TYPE 1, CLASS 4, WHT JKT NO. 22AWG, WHT, 432 FT. 6 IN. TOTAL LENGTH.
	3	1	1900998-003	WIRE ND1002181, TYPE 2, CLASS 4, WHT JKT, NO. 22AWG WHT/BLU, WHT/RED, 180 FT. 0 IN. TOTAL LG.
	4	1	1900998-004	WIRE ND1002181, TYPE 3, CLASS 4, WHT, JKT, NO. 22AWG WHT/BLU, WHT/RED, WHT/YEL 50 FT. 0 IN. TOTAL LENGTH
	5	1	1900998-005	WIRE ND1002181, TYPE 2, CLASS 1, T2, 22AWG WHT WITH LETTER L, WHT WITH LETTER R 35 FT. 0 IN. TOTAL LENGTH.
16	6	1	MS3126F-24-61SX (1897048-612) CONNECTOR	
16	7	1	MS3126F-22-55PW (1897045-551) CONNECTOR	
10	8	1	1010411- 1	CONNECTOR
10	9	27	1000243- 3	FERRULE, ELECT. COND.
10	10	27	1000242- 2	FERRULE, ELECT. COND.
10	11	11	1000243- 8	FERRULE, ELECT. COND.
10	12	11	1000242- 7	FERRULE, ELECT. COND.
10	13	3	1000243- 11	FERRULE, ELECT. COND.
10	14	3	1000242- 11	FERRULE, ELECT. COND.
10	15	6	1010490-196	INSULATION, SLEEVING, ELECT.

MANNED SPACECRAFT CENTER HOUSTON, TEXAS | SIZE A | 1900998
SCALE - NONE | REV LTR B | SHEET 5 OF 20

PENNANT LIST OF MATERIALS

NOTE	ITEM	QTY	PART NO	DESCRIPTION
10	16	49	1010490-198	INSULATION, SLEEVING, ELECT.
10	17	27	1010490-200	INSULATION, SLEEVING, ELECT.
10	18	9	1010490-258	INSULATION, SLEEVING, ELECT.
10	19	1	1016128-011	BAND, IDENTIFICATION
10	20	3	1016128-041	BAND, IDENTIFICATION
10	21	9	1016006-002	SPLICE REDUCER
10	22	108	1010464- 2	CONNECTOR, CONTACT, PIN
	23	AR	MIL-T-713	LACING, TAPE, TYPE P, CLASS 2, BLACK (ES-2732 NO. 18)
	24	1	1900998-006	ZIPPER TUBING, ND1002155, TYPE 1, PLASTIC, FLEXIBLE 1.125 IN. DIA X 13 FT. 0 IN. TOT. LG.
	25	2	1900998-007	ZIPPER TUBING, ND1002155, TYPE 1, PLASTIC, FLEXIBLE 1.0 IN. DIA X 6 FT. 0 IN. TOTAL LG.
10	26	1	1016164-302	TRANSITION, HARNESS, 3 FINGER, HEAT SHRINK
20	27			CONNECTOR CONTACT, SOCKET
21	28			CONNECTOR CONTACT, PIN
10	29	4	1010490-188	INSULATION, SLEEVING, ELECT.
22	30	AR	1897147-106,-108,-112	CABLE CLAMP SLEEVE
10	31	1	1016282- 24	RUBBER GROMMET
10	32	1	1016282- 22	RUBBER GROMMET

MANNED SPACECRAFT CENTER HOUSTON, TEXAS | SIZE A | 1900998
SCALE - NONE | REV LTR C | SHEET 6 OF 20

CONDUCTOR INDIVIDUAL LENGTH NUMBER	ITEM NO.	1>	FROM CUT WIRE OR SHIELD STRIP WIRE OR JACKET CIRCUIT POINT	3>	T I P	2>	TERMINATION SPEC. 1>	ITEM NO.	NO.	TO CUT WIRE OR SHIELD STRIP WIRE OR JACKET CIRCUIT POINT	3>	T I P	2>	TERMINATION SPEC. 1>	ITEM NO.	NO.
A 1	1		P1-A	22M			27			P3- 91	22M			22		
A 2	3			23Q	20Q	11	12		5		23Q	20Q	A	16		7A
						A	16									
A 2A	1		SHLD A2	37M						E1	37M					
A 2L			P1-C	22M			27			P3- 32	22M			22		
A 2R			P1-B	22M			27			P3- 44	22M			22		
A 3	2			23Q	20Q	9	10		5		23Q	20Q	A	17		7A
						A	16									
A 3A	1		SHLD A3	37M						E1	37M					
A 3M			P1-D	22M			27			P3- 84	22M			22		
A 4	2			23Q	20Q	9	10		5		23Q	20Q	A	17		7A
						A	16									
A 4A	1		SHLD A4	37M						E1	37M					
A 4M			P1-E	22M			27			P3- 54	22M			22		
A 5	1		P1-F	22M			27			P3- 26	22M			22		
A 6	1		P1-G	22M			27			P3- 83	22M			22		
A 7	3			23Q	20Q	11	12		5		23Q	20Q	A	16		7A
						A	16									

1> THE STD CONDUCTOR TERMINATION FIGURES ARE PER
3> DIMENSIONS ARE IN INCHES AND TWO PLACE DECIMALS.

MANNED SPACECRAFT CENTER HOUSTON, TEXAS | SIZE A | 1900998
SCALE - NONE | REV LTR B | SHEET 7 OF 20

CONDUCTOR INDIVIDUAL LENGTH NUMBER	ITEM NO.	1>	FROM CUT WIRE OR SHIELD STRIP WIRE OR JACKET CIRCUIT POINT	3>	T I P	2>	TERMINATION SPEC. 1>	ITEM NO.	NO.	TO CUT WIRE OR SHIELD STRIP WIRE OR JACKET CIRCUIT POINT	3>	T I P	2>	TERMINATION SPEC. 1>	ITEM NO.	NO.
A 7A	1		SHLD A7	37M						E1	37M					
A 7L			P1-J	22M			27			P3- 12	22M			22		
A 7R			P1-H	22M			27			P3- 11	22M			22		
A 8	5					A	29						A	29		
A 8L			P1-L	22M			27			P3- 40	22M			22		
A 8R			P1-K	22M			27			P3- 41	22M			22		
A 9	1		P1-N	22M			27			P3- 43	22M			22		
A 10	1		P1-P	22M			27			P3- 71	22M			22		
A 11	3			23Q	20Q	11	12		5		23Q	20Q	A	16		7A
						A	16									
A 11A	1		SHLD A11	37M						E1	37M					
A 11L			P1-S	22M			27			P3- 53	22M			22		
A 11R			P1-R	22M			27			P3- 62	22M			22		
A 12	3			23Q	20Q	11	12		5		23Q	20Q	A	16		7A
						A	16									
A 12A	1		SHLD A12	37M						E1	37M					
A 12L			P1-U	22M			27			P3- 52	22M			22		
A 12R			P1-T	22M			27			P3- 61	22M			22		

1> THE STD CONDUCTOR TERMINATION FIGURES ARE PER
3> DIMENSIONS ARE IN INCHES AND TWO PLACE DECIMALS.

MANNED SPACECRAFT CENTER HOUSTON, TEXAS | SIZE A | 1900998
SCALE - NONE | REV LTR B | SHEET 8 OF 20

CONDUCTOR INDIVIDUAL LENGTH NUMBER	ITEM NO. [2]	FROM CUT WIRE OR SHIELD STRIP WIRE OR JACKET CIRCUIT POINT	T [2]	S	N	TERMINATION SPEC. [1]	ITEM NO.	NO.	TO CUT WIRE OR SHIELD STRIP WIRE OR JACKET CIRCUIT POINT	T [2]	S	N	TERMINATION SPEC. [1]	ITEM NO.	NO.
A 13	1	P1-V		22	N	27			P3- 1		22	N	22		
A 14	1	P1-W		22	N	27			P3- 60		22	N	22		
A 15	1	P1-X		22	N	27			P3- 2		22	N	22		
A 16	1	P1-Y		22	N	27			P3- 96		22	N	22		
A 17	1	P1-Z		22	N	27			P3- 95		22	N	22		
A 18	1	P1-A*		22	N	27			E4		37	N			
A 19	1	P1-B*		22	N	27			P3- 93		22	N	22		
A 20	1	P1-C*		22	N	27			P3- 51		22	N	22		
A 21	1	P1-D*		22	N	27			P3-106		22	N	22		
A 22	1	P1-E*		22	N	27			P3- 77		22	N	22		
A 23	1	P1-F*		22	N	27			P3- 65		22	N	22		
A 24	2		28	Q	25	9 10		5		28	Q 25	A 17		7A	
						A 16									
A 24A	1	SHLD A24		37	N				E2		37	N			
A 24W		P1-G*		22	N	27			P3- 85		22	N	22		
A 25	2		28	Q	25	9 10		5		28	Q 25	A 17		7A	
						A 16									
A 25A	1	SHLD A25		37	N				E2		37	N			

[1] THE STD CONDUCTOR TERMINATION FIGURES ARE PER
[2] DIMENSIONS ARE IN INCHES AND TWO PLACE DECIMALS.

MANNED SPACECRAFT CENTER HOUSTON, TEXAS | SIZE A | 1900998
SCALE - NONE | REV LTR B | SHEET 9 OF 20

CONDUCTOR INDIVIDUAL LENGTH NUMBER	ITEM NO. [2]	FROM CUT WIRE OR SHIELD STRIP WIRE OR JACKET CIRCUIT POINT	T [2]	S	N	TERMINATION SPEC. [1]	ITEM NO.	NO.	TO CUT WIRE OR SHIELD STRIP WIRE OR JACKET CIRCUIT POINT	T [2]	S	N	TERMINATION SPEC. [1]	ITEM NO.	NO.
A 25W		P1-H*		22	N	27			P3- 98		22	N	22		
A 26	1	P1-I*		22	N	27			P3- 42		22	N	22		
A 27	5					A 29							A 29		
A 27L		P1-K*		22	N	27			P3- 69		22	N	22		
A 27R		P1-J*		22	N	27			P3- 80		22	N	22		
A 28	2		28	Q	25	9 10		5		28	Q 25	A 17		7A	
						A 16									
A 28A	1	SHLD A28		37	N				E2		37	N			
A 28W		P1-M*		22	N	27			P3- 92		22	N	22		
A 29	2		28	Q	25	9 10		5		28	Q 25	A 17		7A	
						A 16									
A 29A	1	SHLD A29		37	N				E2		37	N			
A 29W		P1-N*		22	N	27			P3- 74		22	N	22		
A 30	2		28	Q	25	9 10		5		28	Q 25	A 17		7A	
						A 16									
A 30A	1	SHLD A30		37	N				E2		37	N			
A 30W		P1-P*		22	N	27			P3- 90		22	N	22		
A 31	2		28	Q	25	9 10		5		28	Q 25	A 17		7A	

[1] THE STD CONDUCTOR TERMINATION FIGURES ARE PER
[2] DIMENSIONS ARE IN INCHES AND TWO PLACE DECIMALS.

MANNED SPACECRAFT CENTER HOUSTON, TEXAS | SIZE A | 1900998
SCALE - NONE | REV LTR B | SHEET 10 OF 20

CONDUCTOR INDIVIDUAL LENGTH NUMBER	ITEM NO. [2]	FROM CUT WIRE OR SHIELD STRIP WIRE OR JACKET CIRCUIT POINT	T [2]	S	N	TERMINATION SPEC. [1]	ITEM NO.	NO.	TO CUT WIRE OR SHIELD STRIP WIRE OR JACKET CIRCUIT POINT	T [2]	S	N	TERMINATION SPEC. [1]	ITEM NO.	NO.
						A 16									
A 31A	1	SHLD A31		37	N				E2		37	N			
A 31W		P1-Q*		22	N	27			P3-100		22	N	22		
A 32	3		33	Q	30	11 12		5		33	Q 30	A 16		7A	
						A 16									
A 32A	1	SHLD A32		37	N				E3		37	N			
A 32L		P1-S*		22	N	27			P3- 47		22	N	22		
A 32R		P1-R*		22	N	27			P3- 56		22	N	22		
A 33	3		33	Q	30	11 12		5		33	Q 30	A 16		7A	
						A 16									
A 33A	1	SHLD A33		37	N				E3		37	N			
A 33L		P1-U*		22	N	27			P3- 57		22	N	22		
A 33R		P1-T*		22	N	27			P3- 48		22	N	22		
A 34	1	P1-V*		22	N	27			P3- 36		22	N	22		
A 35	1	P1-W*		22	N	27			P3- 94		22	N	22		
A 36	4		33	Q	30	13 14		5		33	Q 30	A 15		7A	
						A 15									
A 36A	1	SHLD A36		37	N				E3		37	N			

[1] THE STD CONDUCTOR TERMINATION FIGURES ARE PER
[2] DIMENSIONS ARE IN INCHES AND TWO PLACE DECIMALS.

MANNED SPACECRAFT CENTER HOUSTON, TEXAS | SIZE A | 1900998
SCALE - NONE | REV LTR B | SHEET 11 OF 20

CONDUCTOR INDIVIDUAL LENGTH NUMBER	ITEM NO. [2]	FROM CUT WIRE OR SHIELD STRIP WIRE OR JACKET CIRCUIT POINT	T [2]	S	N	TERMINATION SPEC. [1]	ITEM NO.	NO.	TO CUT WIRE OR SHIELD STRIP WIRE OR JACKET CIRCUIT POINT	T [2]	S	N	TERMINATION SPEC. [1]	ITEM NO.	NO.
A 36L		P1-Y*		22	N	27			P3- 17		22	N	22		
A 36R		P1-X*		22	N	27			P3- 3		22	N	22		
A 36Y		P1-Z*		22	N	27			P3- 16		22	N	22		
A 37	3		33	Q	30	13 12		5		33	Q 30	A 16		7A	
						A 16									
A 37A	1	SHLD A37		37	N				E3		37	N			
A 37L		P1-BB		22	N	27			P3- 27		22	N	22		
A 37R		P1-AA		22	N	27			P3- 13		22	N	22		
A 38	4		33	Q	30	13 14		5		33	Q 30	A 15		7A	
						A 15									
A 38A	1	SHLD A38		37	N				E3		37	N			
A 38L		P1-DD		22	N	27			P3- 6		22	N	22		
A 38R		P1-CC		22	N	27			P3- 20		22	N	22		
A 38Y		P1-EE		22	N	27			P3- 7		22	N	22		
A 39	4		33	Q	30	13 14		5		33	Q 30	A 15		7A	
						A 15									
A 39A	1	SHLD A39		37	N				E3		37	N			
A 39L		P1-GG		22	N	27			P3- 5		22	N	22		

[1] THE STD CONDUCTOR TERMINATION FIGURES ARE PER
[2] DIMENSIONS ARE IN INCHES AND TWO PLACE DECIMALS.

MANNED SPACECRAFT CENTER HOUSTON, TEXAS | SIZE A | 1900998
SCALE - NONE | REV LTR B | SHEET 12 OF 20

GJK CABLE W-58 B 1900998

CONDUCTOR INDIVIDUAL LENGTH NUMBER	ITEM NO. (3)	FROM CUT WIRE OR SHIELD STRIP WIRE OR JACKET	CIRCUIT POINT (3)	T/I/M (2)	TERMINATION SPEC (1)	ITEM NO.	NO.	TO CUT WIRE OR SHIELD STRIP WIRE OR JACKET	CIRCUIT POINT (3)	T/I/M (2)	TERMINATION SPEC (1)	ITEM NO.	NO.
A 39R		P1-FF	22N		27			P3- 4	22N		22		
A 39Y		P1-HH	22N		27			P3- 18	22N		22		
A 40	2		23Q	20Q	9 10	5			23Q	20Q	A 17	7A	
					A 16								
A 40A	1	SHLD A40	37N					E5	37N				
A 40W		P2-A	22N		28			P3- 39	22N		22		
A 41	2		23Q	20Q	9 10	5			23Q	20Q	A 17	7A	
					A 16								
A 41A	1	SHLD A41	37N					E5	37N				
A 41W		P2-B	22N		28			P3- 73	22N		22		
A 42	2		23Q	20Q	9 10	5			23Q	20Q	A 17	7A	
					A 16								
A 42A	1	SHLD A42	37N					E5	37N				
A 42W		P2-C	22N		28			P3- 10	22N		22		
A 43	3		23Q	20Q	11 12	5			23Q	20Q	A 16	7A	
					A 16								
A 43A	1	SHLD A43	37N					E5	37N				
A 43L		P2-E	22N		28			P3- 23	22N		22		

1. THE STD CONDUCTOR TERMINATION FIGURES ARE PER
2. DIMENSIONS ARE IN INCHES AND TWO PLACE DECIMALS.

MANNED SPACECRAFT CENTER HOUSTON, TEXAS | SIZE A | 1900998

SCALE - NONE | REV LTR B | SHEET 13 OF 20

GJK CABLE W-58 B 1900998

CONDUCTOR INDIVIDUAL LENGTH NUMBER	ITEM NO. (3)	FROM CUT WIRE OR SHIELD STRIP WIRE OR JACKET	CIRCUIT POINT (3)	T/I/M (2)	TERMINATION SPEC (1)	ITEM NO.	NO.	TO CUT WIRE OR SHIELD STRIP WIRE OR JACKET	CIRCUIT POINT (3)	T/I/M (2)	TERMINATION SPEC (1)	ITEM NO.	NO.
A 43R		P2-D	22N		28			P3- 24	22N		22		
A 44	3		23Q	20Q	11 12	5			23Q	20Q	A 16	7A	
					A 16								
A 44A	1	SHLD A44	37N					E5	37N				
A 44L		P2-G	22N		28			P3- 34	22N		22		
A 44R		P2-F	22N		28			P3- 35	22N		22		
A 45	3		23Q	20Q	11 12	5			23Q	20Q	A 16	7A	
					A 16								
A 45A	1	SHLD A45	37N					E5	37N				
A 45L		P2-J	22N		28			P3- 33	22N		22		
A 45R		P2-H	22N		28			P3- 19	22N		22		
A 46	1	P2-K	22N		28			P3- 99	22N		22		
A 47	3		28Q	25Q	11 12	5			28Q	25Q	A 16	7A	
					A 16								
A 47A	1	SHLD A47	37N					E6	37N				
A 47L		P2-M	22N		28			P3- 64	22N		22		
A 47R		P2-L	22N		28			P3- 63	22N		22		
A 48	2		28Q	25Q	9 10	5			28Q	25Q	A 17	7A	

1. THE STD CONDUCTOR TERMINATION FIGURES ARE PER
2. DIMENSIONS ARE IN INCHES AND TWO PLACE DECIMALS.

MANNED SPACECRAFT CENTER HOUSTON, TEXAS | SIZE A | 1900998

SCALE - NONE | REV LTR B | SHEET 14 OF 20

GJK CABLE W-58 B 1900998

CONDUCTOR INDIVIDUAL LENGTH NUMBER	ITEM NO. (3)	FROM CUT WIRE OR SHIELD STRIP WIRE OR JACKET	CIRCUIT POINT (3)	T/I/M (2)	TERMINATION SPEC (1)	ITEM NO.	NO.	TO CUT WIRE OR SHIELD STRIP WIRE OR JACKET	CIRCUIT POINT (3)	T/I/M (2)	TERMINATION SPEC (1)	ITEM NO.	NO.
					A 16								
A 48A	1	SHLD A48	37N					E6	37N				
A 48W		P2-N	22N		28			P3- 29	22N		22		
A 49	1	P2-R	22N		28			P3- 14	22N		22		
A 50	1	P2-S	22N		28			P3- 50	22N		22		
A 51	1	P2-T*	22N		28			P3- 21	22N		22		
A 52	1	P2-U	22N		28			P3- 70	22N		22		
A 53	2		28Q	25Q	9 10	5			28Q	25Q	A 17	7A	
					A 16								
A 53A	1	SHLD A53	37N					E6	37N				
A 53W		P2-V	22N		28			P3- 82	22N		22		
A 54	1	P2-W	22N		28			P3- 58	22N		22		
A 55	1	P2-X	22N		28			P3- 59	22N		22		
A 56	1	P2-Y	22N		28			P3- 66	22N		22		
A 57	1	P2-Z	22N		28			P3- 78	22N		22		
A 58	1	P2-A*	22N		28			E9	37N				
A 59	1	P2-B*	22N		28			P3- 81	22N		22		
A 60	1	P2-C*	22N		28			P3- 79	22N		22		

1. THE STD CONDUCTOR TERMINATION FIGURES ARE PER
2. DIMENSIONS ARE IN INCHES AND TWO PLACE DECIMALS.

MANNED SPACECRAFT CENTER HOUSTON, TEXAS | SIZE A | 1900998

SCALE - NONE | REV LTR B | SHEET 15 OF 20

GJK CABLE W-58 B 1900998

CONDUCTOR INDIVIDUAL LENGTH NUMBER	ITEM NO. (3)	FROM CUT WIRE OR SHIELD STRIP WIRE OR JACKET	CIRCUIT POINT (3)	T/I/M (2)	TERMINATION SPEC (1)	ITEM NO.	NO.	TO CUT WIRE OR SHIELD STRIP WIRE OR JACKET	CIRCUIT POINT (3)	T/I/M (2)	TERMINATION SPEC (1)	ITEM NO.	NO.
A 61	1	P2-D*	22N		28			P3- 68	22N		22		
A 62	1	P2-E*	22N		28			P3- 67	22N		22		
A 63	2		28Q	25Q	9 10	5			28Q	25Q	A 17	7A	
					A 16								
A 63A	1	SHLD A63	37N					E6	37N				
A 63W		P2-F*	22N		28			P3- 89	22N		22		
A 64	2		28Q	25Q	9 10	5			28Q	25Q	A 17	7A	
					A 16								
A 64A	1	SHLD A64	37N					E6	37N				
A 64W		P2-G*	22N		28			P3-104	22N		22		
A 65	2		28Q	25Q	9 10	5			28Q	25Q	A 17	7A	
					A 16								
A 65A	1	SHLD A65	37N					E6	37N				
A 65W		P2-H*	22N		28			P3- 97	22N		22		
A 66	2		33Q	30Q	9 10	5			33Q	30Q	A 17	7A	
					A 16								
A 66A	1	SHLD A66*	37N					E7	37N				
A 66W		P2-J*	22N		28			P3- 86	22N		22		

1. THE STD CONDUCTOR TERMINATION FIGURES ARE PER
2. DIMENSIONS ARE IN INCHES AND TWO PLACE DECIMALS.

MANNED SPACECRAFT CENTER HOUSTON, TEXAS | SIZE A | 1900998

SCALE - NONE | REV LTR B | SHEET 16 OF 20

REVISIONS					
SYM	ZONE	DESCRIPTION	CHG NO.	DATE	APPD.
		SEE SHEET 1 FOR REVISION RECORD			

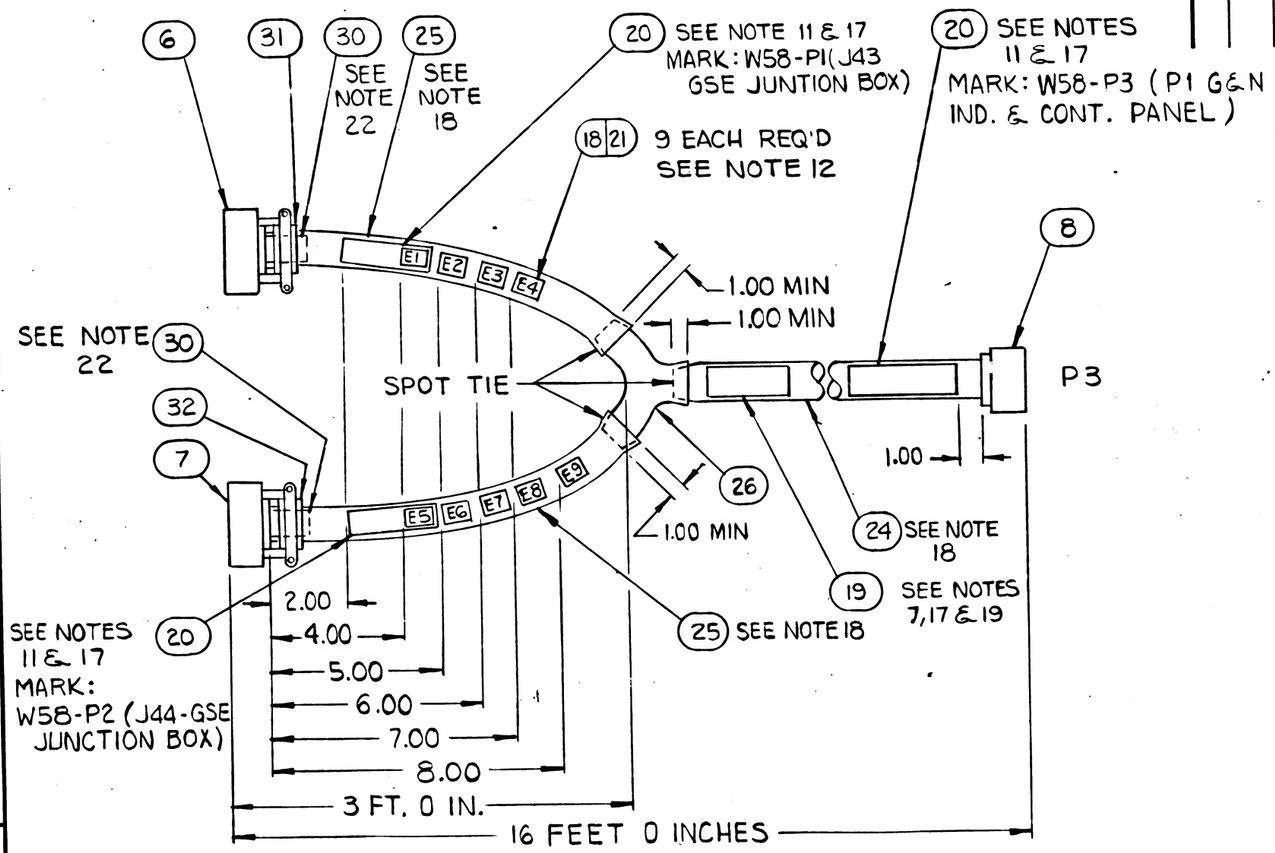

LOCATION TOLERANCE
(EXCEPT LENGTH): +.50
-.50

NEXT ASSY	USED ON
APPLICATION	

UNLESS OTHERWISE SPECIFIED
DIMENSIONS ARE IN INCHES
TOLERANCES ON
FRACTIONS + — — —
DECIMALS + — — —
ANGLES + — — —

DO NOT SCALE THIS DRAWING

MATERIAL

CONTRACT

AC SPARK PLUG DIVISION, GMC
MILWAUKEE, WISCONSIN

ACSP PN

DRAWN WEISSERT DATE 11-NOV-63
CHECKED M. MANNING 25-NOV-63
APPROVAL N. ABRAHAM 25-NOV-63
APPROVAL

NASA APPROVAL

MIT APPROVAL

MANNED SPACECRAFT CENTER
HOUSTON, TEXAS

CABLE, INTERCONNECT W58
ISS, OSS TESTING

CODE IDENT NO. | SIZE C | 1900998

SCALE NONE | SHEET 20 OF 20

MIL 1077C-P

GJK CABLE W-58 B 1900998

CONDUCTOR INDIVIDUAL LENGTH NUMBER	ITEM NO. (2)	FROM CUT WIRE OR SHIELD STRIP WIRE OR JACKET CIRCUIT POINT	(1)	(2)	TERMINATION SPEC (1)	ITEM NO.	NO.	TO CUT WIRE OR SHIELD STRIP WIRE OR JACKET CIRCUIT POINT	(1)	(2)	TERMINATION SPEC (1)	ITEM NO.	NO.
A 67	2		33Q	30Q	9 10		5		33Q	30Q	A 17		7A
					A 16								
A 67A	1	SHLD A67	37N					E7	37N				
A 67W		P2-K*	22N		28			P3-102	22N		22		
A 68	1	P2-M*	22N		28			P3- 37	22N		22		
A 69	1	P2-N*	22N		28			P3- 30	22N		22		
A 70	1	P2-P*	22N		28			P3- 31	22N		22		
A 71	1	P2-R*	22N		28			P3- 55	22N		22		
A 72	1	P2-S*	22N		28			P3- 46	22N		22		
A 72	2		33Q	30Q	9 10		5		33Q	30Q	A 17		7A
					A 16								
A 72A	1	SHLD A72	37N					E7	37N				
A 72W		P2-T*	22N		28			P3- 88	22N		22		
A 73	2		33Q	30Q	9 10		5		33Q	30Q	A 17		7A
					A 16								
A 73A	1	SHLD A73	37N					E7	37N				
A 73W		P2-U*	22N		28			P3- 87	22N		22		
A 74	2		33Q	30Q	9 10		5		33Q	30Q	A 17		7A

(1) THE STD CONDUCTOR TERMINATION FIGURES ARE PER
(2) DIMENSIONS ARE IN INCHES AND TWO PLACE DECIMALS.

MANNED SPACECRAFT CENTER HOUSTON, TEXAS | SIZE A | 1900998
SCALE - NONE | REV LTR B | SHEET 17 OF 20

GJK CABLE W-58 B 1900998

CONDUCTOR INDIVIDUAL LENGTH NUMBER	ITEM NO. (2)	FROM CUT WIRE OR SHIELD STRIP WIRE OR JACKET CIRCUIT POINT	(1)	(2)	TERMINATION SPEC (1)	ITEM NO.	NO.	TO CUT WIRE OR SHIELD STRIP WIRE OR JACKET CIRCUIT POINT	(1)	(2)	TERMINATION SPEC (1)	ITEM NO.	NO.
					A 16								
A 74A	1	SHLD A74	37N					E7	37N				
A 74W		P2-V*	22N		28			P3-101	22N		22		
A 75	2		33Q	30Q	9 10		5		33Q	30Q	A 17		7A
					A 16								
A 75A	1	SHLD A75	37N					E7	37N				
A 75W		P2-W*	22N		28			P3- 76	22N		22		
A 76	2		38Q	35Q	9 10		5		38Q	35Q	A 17		7A
					A 16								
A 76A	1	SHLD A76	37N					E8	37N				
A 76W		P2-X*	22N		28			P3- 75	22N		22		
A 77	2		38Q	35Q	9 10		5		38Q	35Q	A 17		7A
					A 16								
A 77A	1	SHLD A77	37N					E8	37N				
A 77W		P2-Y*	22N		28			P3-105	22N		22		
A 78	2		38Q	35Q	9 10		5		38Q	35Q	A 17		7A
					A 16								
A 78A	1	SHLD A78	37N					E8	37N				

(1) THE STD CONDUCTOR TERMINATION FIGURES ARE PER
(2) DIMENSIONS ARE IN INCHES AND TWO PLACE DECIMALS.

MANNED SPACECRAFT CENTER HOUSTON, TEXAS | SIZE A | 1900998
SCALE - NONE | REV LTR B | SHEET 18 OF 20

GJK CABLE W-58 B 1900998

CONDUCTOR INDIVIDUAL LENGTH NUMBER	ITEM NO. (2)	FROM CUT WIRE OR SHIELD STRIP WIRE OR JACKET CIRCUIT POINT	(1)	(2)	TERMINATION SPEC (1)	ITEM NO.	NO.	TO CUT WIRE OR SHIELD STRIP WIRE OR JACKET CIRCUIT POINT	(1)	(2)	TERMINATION SPEC (1)	ITEM NO.	NO.
A 78W		P2-AA	22N		28			P3- 49	22N		22		
A 79	2		38Q	35Q	9 10		5		38Q	35Q	A 17		7A
					A 16								
A 79A	1	SHLD A79	37N					E8	37N				
A 79W		P2-BB	22N		28			P3- 38	22N		22		
A 80	1	P2-CC	22N		28			P3- 72	22N		22		
A 81	1	P2-DD	22N		28			P3- 25	22N		22		
A 82	1	E1	37N					E4	37N				
A 83	1	E2	37N					E4	37N				
A 84	1	E3	37N					E4	37N				
A 85	1	E5	37N					E9	37N				
A 86	1	E6	37N					E9	37N				
A 87	1	E7	37N					E9	37N				
A 88	1	E8	37N					E9	37N				
A 89	2		38Q	35Q	9 10		5		38Q	35Q	A 17		7A
					A 16								
A 89A	1	SHLD A89	37N					E8	37N				
A 89W		P2-I*	22N		28			P3-103	22N		22		

(1) THE STD CONDUCTOR TERMINATION FIGURES ARE PER
(2) DIMENSIONS ARE IN INCHES AND TWO PLACE DECIMALS.

MANNED SPACECRAFT CENTER HOUSTON, TEXAS | SIZE A | 1900998
SCALE - NONE | REV LTR B | SHEET 19 OF 20

APPLICATION		REVISIONS			
NEXT ASSY	USED ON	SYM	DESCRIPTION	DATE	APPROVAL
1901208	1900005-011	A	CHANGE IN ACCORDANCE WITH CM193777 TDR# 10039	4 FEB 64	GG / PZ
		B	CHANGE IN ACCORDANCE WITH CM195032	3 MAR 64	JJJ / GP
		C	CHANGE IN ACCORDANCE WITH CM 200712 REVISED CUSOMER DATA V2-64	2 APR 64	JWP / MEM
		D	CHANGE IN ACCORDANCE WITH CM 196300 10030	27 MAY 64	R.B. / CP
		E	CHANGE IN ACCORDANCE WITH CM197538 10608 REVISED CUSTOMER DATA (V2-64)	8 JUNE 64	R.B. / MEM

FOR INFORMATION ONLY

CLASS B RELEASE TDR No. 05653 DATE 4/7/64

REV																						
SHEET																						
REV STATUS	REV	E	E	E	E	E	E	E	E	E	E	E	E	E	E	E	E	E	E	E	E	E
OF SHEETS	SHEET	1	2	3	4	5	6	7	8	9	10	11	12	13	14	15	16	17	18	19	20	21

AC SPARK PLUG DIVISION, GMC
MILWAUKEE, WISCONSIN

ACSP PN

DRAWN WEISSERT DATE 11-NOV-63
CHECKED 25 NOV 63
APPROVAL 27 NOV 63
APPROVAL

MANNED SPACECRAFT CENTER
HOUSTON, TEXAS

CABLE, INTERCONNECT W58
ISS, OSS TESTING

NASA APPROVAL
MIT APPROVAL 7 Jan 64

CONTRACT

CODE IDENT NO. | SIZE A | 1900998 | REV E

SCALE | SHEET 1 OF 21

REMARKS

GENERAL NOTES

NOTE 1 SEE CONDUCTOR CHART, PENNANT NOTE 1.

2 SEE CONDUCTOR CHART, PENNANT NOTE 2.

3 INTERPRET DRAWING IN ACCORDANCE WITH STANDARDS PRESCRIBED BY MIL-D-70327B.

4 MARK CONDUCTOR IDENTIFICATION ON SINGLE CONDUCTORS PER ND1002019 ONLY USING ALL SUFFIX LETTERS EXCEPT A AND B.

5 SPACING OF CONDUCTOR IDENTIFICATION SHALL BE EVERY 18 INCHES MAX. AND AT EACH TERMINATION.

6 SPIRALLING OF THE MARKING IS ALLOWED.

7 IDENTIFY USING DRAWING NO. AND REVISION LETTER PER MIL-STD-130 (ES-2671). USE INCH HIGH CHARACTERS WHITE.

8 Y OR N IN TINNED COLUMN INDICATES YES OR NO.

9 A LETTER WITH AN ASTERISK SUFFIX INDICATES A LOWER CASE LETTER.

10 VENDOR ITEM - SEE SPECIFICATION CONTROL DRAWING.

11 MARK IDENTIFICATION BAND WITH REFERENCE DESIGNATION AS NOTED +12 INCH HIGH COLOR WHITE. HOT IMPRESSION STAMPING PER ND1002019. CENTRALIZE.

12 MARK SLEEVING WITH REFERENCE DESIGNATIONS AS SHOWN +12 INCH HIGH, COLOR BLACK PER ND1002019.

13 MARK SLEEVING OF MULTI-CONDUCTORS WITH THE CONDUCTOR NUMBER +12 INCH HIGH, COLOR BLACK PER ND1002019. WHERE SLEEVING ITEM NUMBERS FOLLOW AN A OR T IN THE ACCESSORIES ITEM NUMBER FIELD.

MANNED SPACECRAFT CENTER HOUSTON, TEXAS	SIZE A	1900998
SCALE - NONE	REV LTR E	SHEET 2 OF 21

REMARKS

GENERAL NOTES

NOTE 14 OR 7 PREFIX IN THE ACCESSORIES ITEM NUMBER COLUMN INDICATES THE READING POSITION AWAY FROM TERMINATION OR TOWARD TERMINATION RESPECTIVELY, OF THE WIRE MARKER SLEEVE.

15 THE SUFFIX LETTER OF A CONDUCTOR IDENTIFICATION NUMBER DESIGNATES CONDUCTOR SHIELDING, COLOR, OR MARKING.

16 R - WHITE WITH BLUE TRACER OR WHITE WITH LETTER L.
B - WHITE WITH RED TRACER OR WHITE WITH LETTER M.
Y - WHITE WITH YELLOW TRACER

17 ASSEMBLE CONTACTS IN ALL CONNECTOR GROMMET HOLES.

18 SECURE TO CABLE USING ITEM 22. MARKING TO READ AWAY FROM CONNECTOR.

19 SEAL ZIPPER TUBING PER ND1002193.

20 SERIALIZE PER ND1002023

21 ITEM 27 FURNISHED WITH ITEM 6.

22 ITEM 28 FURNISHED WITH ITEM 7

23 ITEM 30 SHALL BE SHORTENED WHEN NECESSARY TO AVOID INTERFERENCE WITH FERRULES AND MAY BE CUT LENGTHWISE ON ONE SIDE. SELECT ONE OR MORE OF ITEM 30 AS REQUIRED TO FIT.

MANNED SPACECRAFT CENTER HOUSTON, TEXAS	SIZE A	1900998
SCALE - NONE	REV LTR E	SHEET 3 OF 21

GENERAL NOTES

NOTE 1 TOLERANCE CHART, UNLESS OTHERWISE SPECIFIED.

APPLICABLE LENGTH FOR WIRE OR CABLE	TOLERANCE STRIP WIRE, STRIP JACKET, CUT WIRE OR CUT SHIELD.	TOLERANCE CUT WIRE OR CABLE	TOLERANCE STRIP WIRE JACKET, WIRE	TOLERANCE CUT SHIELD
UNDER 3 INCH	+.00--.00	+.01--.00	+.01--.01	+.02--.02
3-4INCH TO 6 INCHES	+.50--.00	+.06--.00	+.25--.25	+.25--.25
6 INCHES TO 6 FEET	+1.00--.00	+.50--.50	+.50--.50	+.50--.50
OVER 6 FEET	+2.00--.00			

MANNED SPACECRAFT CENTER HOUSTON, TEXAS	SIZE A	1900998
SCALE - NONE	REV LTR E	SHEET 4 OF 21

LIST OF MATERIALS

PENNANT NOTE	ITEM	QTY	PART NO	DESCRIPTION
	1	1	1900998-001	WIRE ND1002181, TYPE 1, CLASS 1, WHT, NO. 22AWG 820 FT., 0 IN. TOTAL LENGTH.
	2	1	1900998-002	WIRE ND1002181, TYPE 1, CLASS 4, WHT JKT NO. 22AWG, WHT, 432 FT. 0 IN. TOTAL LENGTH.
	3	1	1900998-003	WIRE ND1002181, TYPE 2, CLASS 4, WHT JKT, NO. 22AWG WHT/BLU, WHT/RED, 180 FT. 0 IN. TOTAL LG.
	4	1	1900998-004	WIRE ND1002181, TYPE 3, CLASS 4, WHT, JKT, NO. 22AWG WHT/BLU, WHT/RED, WHT/YEL 50 FT. 0 IN. TOTAL LENGTH
	5	1	1900998-005	WIRE ND1002181, TYPE 2, CLASS 1, T2, 22AWG WHT WITH LETTER L, WHT WITH LETTER R 35 FT. 0 IN. TOTAL LENGTH.
10	6	1	MS3126F-24-61SX (1897048-612)	CONNECTOR
10	7	1	MS3126F-22-55PW (1897045-551)	CONNECTOR
10	8	1	1010411- 1	CONNECTOR
10	9	27	1000243- 9	FERRULE, ELECT. COND.
10	10	27	1000242- 2	FERRULE, ELECT. COND.
10	11	11	1000243- 8	FERRULE, ELECT. COND.
10	12	11	1000242- 7	FERRULE, ELECT. COND.
10	13	2	1000243- 11	FERRULE, ELECT. COND.
10	14	9	1000242- 11	FERRULE, ELECT. COND.
10	15	6	1010490-196	INSULATION, SLEEVING, ELECT.

MANNED SPACECRAFT CENTER HOUSTON, TEXAS | SIZE A | 1900998
SCALE - NONE | REV LTR E | SHEET 5 OF 21

LIST OF MATERIALS

PENNANT NOTE	ITEM	QTY	PART NO	DESCRIPTION
10	16	40	1010490-197	INSULATION, SLEEVING, ELECT.
10	17	37	1010490-200	INSULATION, SLEEVING, ELECT.
10	18	9	1010490-258	INSULATION, SLEEVING, ELECT.
10	19	1	1016128-011	BAND, IDENTIFICATION
10	20	3	1016128-041	BAND, IDENTIFICATION
10	21	9	1016006-002	SPLICE REDUCER
10	22	108	1010464- 2	CONNECTOR, CONTACT, PIN
	23	AR	MIL-T-713	LACING, TAPE, TYPE F, CLASS 2, BLACK (ES-2732 NO. 18)
	24	1	1900998-006	ZIPPER TUBING, ND1002199, TYPE 1, PLASTIC, FLEXIBLE 1.125 IN. DIA X 13 FT. 0 IN. TOT. LG.
	25	2	1900998-007	ZIPPER TUBING, ND1002199, TYPE 1, PLASTIC, FLEXIBLE 1.0 IN. DIA X 6 FT. 0 IN. TOTAL LG.
10	26	1	1016184-002	TRANSITION, HARNESS, 3 FINGER, HEAT SHRINK
20	27			CONNECTOR CONTACT, SOCKET
21	28			CONNECTOR CONTACT, PIN
10	29	4	1010490-188	INSULATION, SLEEVING, ELECT.
22	30	AR	1897147-106,-108,-112	CABLE CLAMP SLEEVE
10	31	1	1016282- 24	RUBBER GROMMET
10	32	1	1016282- 22	RUBBER GROMMET

MANNED SPACECRAFT CENTER HOUSTON, TEXAS | SIZE A | 1900998
SCALE - NONE | REV LTR E | SHEET 6 OF 21

LIST OF MATERIALS

PENNANT NOTE	ITEM	QTY	PART NO	DESCRIPTION
10	33	1	1015902- 46	TERMINAL LUG
	34	1	1900998-008	TUBING, MODIFIED POLYVINYL CHLORIDE, FLEXIBLE SHRINK-FIT PER 1016197-006 6 INCH TOTAL LENGTH

MANNED SPACECRAFT CENTER HOUSTON, TEXAS | SIZE A | 1900998
SCALE - NONE | REV LTR E | SHEET 7 OF 21

CONDUCTOR INDIVIDUAL LENGTH			FROM: CUT WIRE OR SHIELD / STRIP WIRE OR JACKET / CIRCUIT POINT			TERMINATION SPEC			TO: CUT WIRE OR SHIELD / STRIP WIRE OR JACKET / CIRCUIT POINT			TERMINATION SPEC		
HARNESS	ITEM NO.					TOP WIRE						ITEM NO.		
A	2		P3-	25N		33			P3- 91	22N		28		
A	2			23Q	20Q	13 12	9			23Q	20Q	A 16	7A	
						A 16								
A	2A	1	SHLD A2	37N					E1	37N				
A	2L		P1-C	22N		27			P3- 32	22N		22		
A	2N		P1-B	22N		27			P3- 44	22N		22		
A	2	2		23Q	20Q	9 10				23Q	20Q	A 17	7A	
						A 16								
A	3A	1	SHLD A3	37N					E1	37N				
A	3N		P1-D	22N		27			P3- 84	22N		22		
A	3	2		23Q	20Q	9 10	9			23Q	20Q	A 17	7A	
						A 16								
A	4A	1	SHLD A4	37N					E1	37N				
A	4N		P1-E	22N		27			P3- 94	22N		22		
A	4	1	P1-F	22N		27			P3- 26	22N		22		
A	4	1	P1-G	22N		27			P3- 89	22N		22		
A	9	2		23Q	20Q	12 12	6			23Q	20Q	A 16	7A	
						A 16								

THE 23Q CONDUCTOR TERMINATION FIGURES ARE PER
DIMENSIONS ARE IN INCHES AND TWO PLACE DECIMALS.

MANNED SPACECRAFT CENTER HOUSTON, TEXAS | SIZE A | 1900998 FO
SCALE - NONE | REV LTR E | SHEET 8 OF 21

CONDUCTOR INDIVIDUAL LENGTH NUMBER	ITEM NO.	FROM CUT WIRE OR SHIELD STRIP WIRE OR JACKET CIRCUIT POINT	T	B	TERMINATION SPEC. ITEM NO.	NO.	TO CUT WIRE OR SHIELD STRIP WIRE OR JACKET CIRCUIT POINT	T	B	TERMINATION SPEC. ITEM NO.	NO.
A 7A	1	SHLD A7	37N				E1	37N			
A 7L		P1-J	22N		27		P3- 12	22N		22	
A 7R		P1-H	22N		27		P3- 11	22N		22	
A 8	5				A 29					A 29	
A 8L		P1-L	22N		27		P3- 40	22N		22	
A 8R		P1-K	22N		27		P3- 41	22N		22	
A 9	1	P1-N	22N		27		P3- 43	22N		22	
A 10	1	P1-P	22N		27		P3- 71	22N		22	
A 11	3		230	200	11 12	5		230	200	A 16	7A
					A 16						
A 11A	1	SHLD A11	37N				E1	37N			
A 11L		P1-S	22N		27		P3- 53	22N		22	
A 11R		P1-R	22N		27		P3- 62	22N		22	
A 12	3		230	200	11 12	5		230	200	A 16	7A
					A 16						
A 12A	1	SHLD A12	37N				E1	37N			
A 12L		P1-U	22N		27		P3- 52	22N		22	
A 12R		P1-T	22N		27		P3- 61	22N		22	

△ THE STD CONDUCTOR TERMINATION FIGURES ARE PER
▷ DIMENSIONS ARE IN INCHES AND TWO PLACE DECIMALS.

MANNED SPACECRAFT CENTER HOUSTON, TEXAS | SIZE A | 1900998
SCALE - NONE | REV LTR E | SHEET 9 OF 21

CONDUCTOR INDIVIDUAL LENGTH NUMBER	ITEM NO.	FROM CUT WIRE OR SHIELD STRIP WIRE OR JACKET CIRCUIT POINT	T	B	TERMINATION SPEC. ITEM NO.	NO.	TO CUT WIRE OR SHIELD STRIP WIRE OR JACKET CIRCUIT POINT	T	B	TERMINATION SPEC. ITEM NO.	NO.
A 13	1	P1-V	22N		27		P3- 1	22N		22	
A 14	1	P1-W	22N		27		P3- 60	22N		22	
A 15	1	P1-X	22N		27		P3- 2	22N		22	
A 16	1	P1-Y	22N		27		P3- 96	22N		22	
A 17	1	P1-Z	22N		27		P3- 95	22N		22	
A 18	1	P1-A*	22N		27		E4	37N			
A 19	1	P1-B*	22N		27		P3- 93	22N		22	
A 20	1	P1-C*	22N		27		P3- 51	22N		22	
A 21	1	P1-D*	22N		27		P3-106	22N		22	
A 22	1	P1-E*	22N		27		P3- 77	22N		22	
A 23	1	P1-F*	22N		27		P3- 65	22N		22	
A 24	2		280	250	9 10	5		280	250	A 17	7A
					A 16						
A 24A	1	SHLD A24	37N				E2	37N			
A 24W		P1-G*	22N		27		P3- 85	22N		22	
A 25	2		280	250	9 10	5		280	250	A 17	7A
					A 16						
A 25A	1	SHLD A25	37N				E2	37N			

△ THE STD CONDUCTOR TERMINATION FIGURES ARE PER
▷ DIMENSIONS ARE IN INCHES AND TWO PLACE DECIMALS.

MANNED SPACECRAFT CENTER HOUSTON, TEXAS | SIZE A | 1900998
SCALE - NONE | REV LTR E | SHEET 10 OF 21

CONDUCTOR INDIVIDUAL LENGTH NUMBER	ITEM NO.	FROM CUT WIRE OR SHIELD STRIP WIRE OR JACKET CIRCUIT POINT	T	B	TERMINATION SPEC. ITEM NO.	NO.	TO CUT WIRE OR SHIELD STRIP WIRE OR JACKET CIRCUIT POINT	T	B	TERMINATION SPEC. ITEM NO.	NO.
A 25W		P1-H*	22N		27		P3- 98	22N		22	
A 26	1	P1-I*	22N		27		P3- 42	22N		22	
A 27	5				A 29					A 29	
A 27L		P1-K*	22N		27		P3- 69	22N		22	
A 27R		P1-J*	22N		27		P3- 80	22N		22	
A 28	2		280	250	9 10	5		280	250	A 17	7A
					A 16						
A 28A	1	SHLD A28	37N				E2	37N			
A 28W		P1-H*	22N		27		P3- 92	22N		22	
A 29	2		280	250	9 10	5		280	250	A 17	7A
					A 16						
A 29A	1	SHLD A29	37N				E2	37N			
A 29W		P1-M*	22N		27		P3- 74	22N		22	
A 30	2		280	250	9 10	5		280	250	A 17	7A
					A 16						
A 30A	1	SHLD A30	37N				E2	37N			
A 30W		P1-P*	22N		27		P3- 90	22N		22	
A 31	2		280	250	9 10	5		280	250	A 17	7A

△ THE STD CONDUCTOR TERMINATION FIGURES ARE PER
▷ DIMENSIONS ARE IN INCHES AND TWO PLACE DECIMALS.

MANNED SPACECRAFT CENTER HOUSTON, TEXAS | SIZE A | 1900998
SCALE - NONE | REV LTR E | SHEET 11 OF 21

CONDUCTOR INDIVIDUAL LENGTH NUMBER	ITEM NO.	FROM CUT WIRE OR SHIELD STRIP WIRE OR JACKET CIRCUIT POINT	T	B	TERMINATION SPEC. ITEM NO.	NO.	TO CUT WIRE OR SHIELD STRIP WIRE OR JACKET CIRCUIT POINT	T	B	TERMINATION SPEC. ITEM NO.	NO.
					A 16						
A 31A	1	SHLD A31	37N				E2	37N			
A 31W		P1-Q*	22N		27		P3-100	22N		22	
A 32	3		330	300	11 12	5		330	300	A 16	7A
					A 16						
A 32A	1	SHLD A32	37N				E3	37N			
A 32L		P1-S*	22N		27		P3- 47	22N		22	
A 32R		P1-R*	22N		27		P3- 56	22N		22	
A 33	3		330	300	11 12	5		330	300	A 16	7A
					A 16						
A 33A	1	SHLD A33	37N				E3	37N			
A 33L		P1-U*	22N		27		P3- 57	22N		22	
A 33R		P1-T*	22N		27		P3- 48	22N		22	
A 34	1	P1-V*	22N		27		P3- 36	22N		22	
A 35	1	P1-W*	22N		27		P3- 94	22N		22	
A 36	4		330	300	13 14	5		330	300	A 15	7A
					A 15						
A 36A	1	SHLD A36	37N				E3	37N			

△ THE STD CONDUCTOR TERMINATION FIGURES ARE PER
▷ DIMENSIONS ARE IN INCHES AND TWO PLACE DECIMALS.

MANNED SPACECRAFT CENTER HOUSTON, TEXAS | SIZE A | 1900998
SCALE - NONE | REV LTR E | SHEET 12 OF 21

G.K CABLE W-38 E 1900998

CONDUCTOR INDIVIDUAL LENGTH NUMBER	ITEM NO.	2	FROM CUT WIRE OR SHIELD STRIP WIRE OR JACKET CIRCUIT POINT	2	T I N	2	TERMINATION SPEC. 1 ITEM NO.	NO.	TO CUT WIRE OR SHIELD STRIP WIRE OR JACKET CIRCUIT POINT	2	T I N	2	TERMINATION SPEC. 1 ITEM NO.	NO.
A 36L			P1-Y*	22N		27			P3- 17	22N		22		
A 36R			P1-X*	22N		27			P3- 5	22N		22		
A 36Y			P1-Z*	22N		27			P3- 16	22N		22		
A 37	3			330	300	11 12		5		330	300	A 16		7A
						A 16								
A 37A	1		SHLD A37	37N					E3	37N				
A 37L			P1-BB	22N		27			P3- 27	22N		22		
A 37R			P1-AA	22N		27			P3- 13	22N		22		
A 38	4			330	300	13 14		5		330	300	A 15		7A
						A 15								
A 38A	1		SHLD A38	37N					E3	37N				
A 38L			P1-DD	22N		27			P3- 6	22N		22		
A 38R			P1-CC	22N		27			P3- 20	22N		22		
A 38Y			P1-EE	22N		27			P3- 7	22N		22		
A 39	4			330	300	13 14		5		330	300	A 15		7A
						A 15								
A 39A	1		SHLD A39	37N					E9	37N				
A 39L			P1-GG	22N		27			P3- 5	22N		22		

1 THE STD CONDUCTOR TERMINATION FIGURES ARE PER
2 DIMENSIONS ARE IN INCHES AND TWO PLACE DECIMALS.

MANNED SPACECRAFT CENTER HOUSTON, TEXAS | SIZE A | 1900998
SCALE - NONE | REV LTR E | SHEET 13 OF 21

G.K CABLE W-38 E 1900998

CONDUCTOR INDIVIDUAL LENGTH NUMBER	ITEM NO.	2	FROM CUT WIRE OR SHIELD STRIP WIRE OR JACKET CIRCUIT POINT	2	T I N	2	TERMINATION SPEC. 1 ITEM NO.	NO.	TO CUT WIRE OR SHIELD STRIP WIRE OR JACKET CIRCUIT POINT	2	T I N	2	TERMINATION SPEC. 1 ITEM NO.	NO.
A 39R			P1-PP	22N		27			P3- 4	22N		22		
A 39Y			P1-MM	22N		27			P3- 18	22N		22		
A 40	2			230	200	9 10		5		230	200	A 17		7A
						A 16								
A 40A	1		SHLD A40	37N					E5	37N				
A 40W			P2-A	22N		28			P3- 39	22N		22		
A 41	2			230	200	9 10		5		230	200	A 17		7A
						A 16								
A 41A	1		SHLD A41	37N					E5	37N				
A 41W			P2-B	22N		28			P3- 73	22N		22		
A 42	2			230	200	9 10		5		230	200	A 17		7A
						A 16								
A 42A	1		SHLD A42	37N					E5	37N				
A 42W			P2-C	22N		28			P3- 10	22N		22		
A 43	3			230	200	11 12		5		230	200	A 16		7A
						A 16								
A 43A	1		SHLD A43	37N					E5	37N				
A 43L			P2-E	22N		28			P3- 23	22N		22		

1 THE STD CONDUCTOR TERMINATION FIGURES ARE PER
2 DIMENSIONS ARE IN INCHES AND TWO PLACE DECIMALS.

MANNED SPACECRAFT CENTER HOUSTON, TEXAS | SIZE A | 1900998
SCALE - NONE | REV LTR E | SHEET 14 OF 21

G.K CABLE W-38 E 1900998

CONDUCTOR INDIVIDUAL LENGTH NUMBER	ITEM NO.	2	FROM CUT WIRE OR SHIELD STRIP WIRE OR JACKET CIRCUIT POINT	2	T I N	2	TERMINATION SPEC. 1 ITEM NO.	NO.	TO CUT WIRE OR SHIELD STRIP WIRE OR JACKET CIRCUIT POINT	2	T I N	2	TERMINATION SPEC. 1 ITEM NO.	NO.
							A 16							
A 43R			P2-D	22N		28			P3- 24	22N		22		
A 44	3			230	200	11 12		5		230	200	A 16		7A
						A 16								
A 44A	1		SHLD A44	37N					E5	37N				
A 44L			P2-G	22N		28			P3- 34	22N		22		
A 44R			P2-F	22N		28			P3- 35	22N		22		
A 45	3			230	200	11 12		5		230	200	A 16		7A
						A 16								
A 45A	1		SHLD A45	37N					E5	37N				
A 45L			P2-J	22N		28			P3- 33	22N		22		
A 45R			P2-H	22N		28			P3- 19	22N		22		
A 46	1		P2-K	22N		28			P3- 99	22N		22		
A 47	3			280	250	11 12		5		280	250	A 16		7A
						A 16								
A 47A	1		SHLD A47	37N					E6	37N				
A 47L			P2-M	22N		28			P3- 64	22N		22		
A 47R			P2-L	22N		28			P3- 63	22N		22		
A 48	2			280	250	9 10		5		280	250	A 17		7A

1 THE STD CONDUCTOR TERMINATION FIGURES ARE PER
2 DIMENSIONS ARE IN INCHES AND TWO PLACE DECIMALS.

MANNED SPACECRAFT CENTER HOUSTON, TEXAS | SIZE A | 1900998
SCALE - NONE | REV LTR E | SHEET 15 OF 21

G.K CABLE W-38 E 1900998

CONDUCTOR INDIVIDUAL LENGTH NUMBER	ITEM NO.	2	FROM CUT WIRE OR SHIELD STRIP WIRE OR JACKET CIRCUIT POINT	2	T I N	2	TERMINATION SPEC. 1 ITEM NO.	NO.	TO CUT WIRE OR SHIELD STRIP WIRE OR JACKET CIRCUIT POINT	2	T I N	2	TERMINATION SPEC. 1 ITEM NO.	NO.
							A 16							
A 48A	1		SHLD A48	37N					E6	37N				
A 48W			P2-N	22N		28			P3- 29	22N		22		
A 49	1		P2-R	22N		28			P3- 34	22N		22		
A 50	1		P2-S	22N		28			P3- 50	22N		22		
A 51	1		P2-T	22N		28			P3- 21	22N		22		
A 52	1		P2-U	22N		28			P3- 70	22N		22		
A 53	2			280	250	9 10		5		280	250	A 17		7A
						A 16								
A 53A	1		SHLD A53	37N					E6	37N				
A 53W			P2-V	22N		28			P3- 82	22N		22		
A 54	1		P2-W	22N		28			P3- 58	22N		22		
A 55	1		P2-X	22N		28			P3- 59	22N		22		
A 56	1		P2-Y	22N		28			P3- 66	22N		22		
A 57	1		P2-Z	22N		28			P3- 78	22N		22		
A 58	1		P2-A*	22N		28			E9	37N				
A 59	1		P2-B*	22N		28			P3- 81	22N		22		
A 60	1		P2-C*	22N		28			P3- 79	22N		22		

1 THE STD CONDUCTOR TERMINATION FIGURES ARE PER
2 DIMENSIONS ARE IN INCHES AND TWO PLACE DECIMALS.

MANNED SPACECRAFT CENTER HOUSTON, TEXAS | SIZE A | 1900998
SCALE - NONE | REV LTR E | SHEET 16 OF 21

CONDUCTOR INDIVIDUAL LENGTH NUMBER	ITEM NO.		FROM CUT WIRE OR SHIELD STRIP WIRE OR JACKET CIRCUIT POINT				TERMINATION SPEC.		NO.	TO CUT WIRE OR SHIELD STRIP WIRE OR JACKET CIRCUIT POINT				TERMINATION SPEC.		NO.
						ITEM NO.							ITEM NO.			
A 61	1		P2-D*	22M		2B				P3- 68	22M		22			
A 62	1		P2-E*	22M		2B				P3- 67	22M		22			
A 63	2			280	250	9 10		5			280	250	A 17		7A	
						A 16										
A 63A	1		SHLD A63	37M						E6	37M					
A 63W			P2-F*	22M		2B				P3- 89	22M		22			
A 64	2			280	250	9 10		5			280	250	A 17		7A	
						A 16										
A 64A	1		SHLD A64	37M						E6	37M					
A 64W			P2-G*	22M		2B				P3-104	22M		22			
A 65	2			280	250	9 10		5			280	250	A 17		7A	
						A 16										
A 65A	1		SHLD A65	37M						E6	37M					
A 65W			P2-H*	22M		2B				P3- 97	22M		22			
A 66	2			330	300	9 10		5			330	300	A 17		7A	
						A 16										
A 66A	1		SHLD A66	37M						E7	37M					
A 66W			P2-J*	22M		2B				P3- 86	22M		22			

1 THE STD CONDUCTOR TERMINATION FIGURES ARE PER
2 DIMENSIONS ARE IN INCHES AND TWO PLACE DECIMALS.

MANNED SPACECRAFT CENTER HOUSTON, TEXAS | SIZE A | 1900998
SCALE - NONE | REV LTR E | SHEET 17 OF 21

CONDUCTOR INDIVIDUAL LENGTH NUMBER	ITEM NO.		FROM CUT WIRE OR SHIELD STRIP WIRE OR JACKET CIRCUIT POINT				TERMINATION SPEC.		NO.	TO CUT WIRE OR SHIELD STRIP WIRE OR JACKET CIRCUIT POINT				TERMINATION SPEC.		NO.
						ITEM NO.							ITEM NO.			
A 67	2			330	300	9 10		5			330	300	A 17		7A	
						A 16										
A 67A	1		SHLD A67	37M						E7	37M					
A 67W			P2-K*	22M		2B				P3-102	22M		22			
A 68	1		P2-M*	22M		2B				P3- 37	22M		22			
A 69	1		P2-N*	22M		2B				P3- 30	22M		22			
A 70	1		P2-EE	22M		2B				P3- 31	22M		22			
A 71	1		P2-R*	22M		2B				P3- 55	22M		22			
A 72	1		P2-S*	22M		2B				P3- 46	22M		22			
A 72	2			330	300	9 10		5			330	300	A 17		7A	
						A 16										
A 72A	1		SHLD A72	37M						E7	37M					
A 72W			P2-T*	22M		2B				P3- 88	22M		22			
A 73	2			330	300	9 10		5			330	300	A 17		7A	
						A 16										
A 73A	1		SHLD A73	37M						E7	37M					
A 73W			P2-U*	22M		2B				P3- 87	22M		22			
A 74	2			330	300	9 10		5			330	300	A 17		7A	

1 THE STD CONDUCTOR TERMINATION FIGURES ARE PER
2 DIMENSIONS ARE IN INCHES AND TWO PLACE DECIMALS.

MANNED SPACECRAFT CENTER HOUSTON, TEXAS | SIZE A | 1900998
SCALE - NONE | REV LTR E | SHEET 18 OF 21

CONDUCTOR INDIVIDUAL LENGTH NUMBER	ITEM NO.		FROM CUT WIRE OR SHIELD STRIP WIRE OR JACKET CIRCUIT POINT				TERMINATION SPEC.		NO.	TO CUT WIRE OR SHIELD STRIP WIRE OR JACKET CIRCUIT POINT				TERMINATION SPEC.		NO.
						ITEM NO.							ITEM NO.			
A 74A	1		SHLD A74	37M						E7	37M					
A 74W			P2-V*	22M		2B				P3-101	22M		22			
A 75	2			330	300	9 10		5			330	300	A 17		7A	
						A 16										
A 75A	1		SHLD A75	37M						E7	37M					
A 75W			P2-W*	22M		2B				P3- 76	22M		22			
A 76	2			380	350	9 10		5			380	350	A 17		7A	
						A 16										
A 76A	1		SHLD A76	37M						E8	37M					
A 76W			P2-X*	22M		2B				P3- 75	22M		22			
A 77	2			380	350	9 10		5			380	350	A 17		7A	
						A 16										
A 77A	1		SHLD A77	37M						E8	37M					
A 77W			P2-Y*	22M		2B				P3-105	22M		22			
A 78	2			380	350	9 10		5			380	350	A 17		7A	
						A 16										
A 78A	1		SHLD A78	37M						E8	37M					

1 THE STD CONDUCTOR TERMINATION FIGURES ARE PER
2 DIMENSIONS ARE IN INCHES AND TWO PLACE DECIMALS.

MANNED SPACECRAFT CENTER HOUSTON, TEXAS | SIZE A | 1900998
SCALE - NONE | REV LTR E | SHEET 19 OF 21

CONDUCTOR INDIVIDUAL LENGTH NUMBER	ITEM NO.		FROM CUT WIRE OR SHIELD STRIP WIRE OR JACKET CIRCUIT POINT				TERMINATION SPEC.		NO.	TO CUT WIRE OR SHIELD STRIP WIRE OR JACKET CIRCUIT POINT				TERMINATION SPEC.		NO.
						ITEM NO.							ITEM NO.			
A 78W			P2-AA	22M		2B				P3- 49	22M		22			
A 79	2			380	350	9 10		5			380	350	A 17		7A	
						A 16										
A 79A	1		SHLD A79	37M						E8	37M					
A 79W			P2-BB	22M		2B				P3- 38	22M		22			
A 80	1		P2-CC	22M		2B				P3- 72	22M		22			
A 81	1		P2-DD	22M		2B				P3- 29	22M		22			
A 82	1		E1	37M						E4	37M					
A 83	1		E2	37M						E4	37M					
A 84	1		E3	37M						E4	37M					
A 85	1		E5	37M						E9	37M					
A 86	1		E6	37M						E9	37M					
A 87	1		E7	37M						E9	37M					
A 88	1		E8	37M						E9	37M					
A 89	2			380	350	9 10		5			380	350	A 17		7A	
						A 16										
A 89A	1		SHLD A89	37M						E8	37M					
A 89W			P2-I*	22M		2B				P3-103	22M		22			

1 THE STD CONDUCTOR TERMINATION FIGURES ARE PER
2 DIMENSIONS ARE IN INCHES AND TWO PLACE DECIMALS.

MANNED SPACECRAFT CENTER HOUSTON, TEXAS | SIZE A | 1900998
SCALE - NONE | REV LTR E | SHEET 20 OF 21

REVISIONS					
SYM	ZONE	DESCRIPTION	CHG NO.	DATE	APPD.
		SEE SHEET 1 FOR REVISION RECORD			

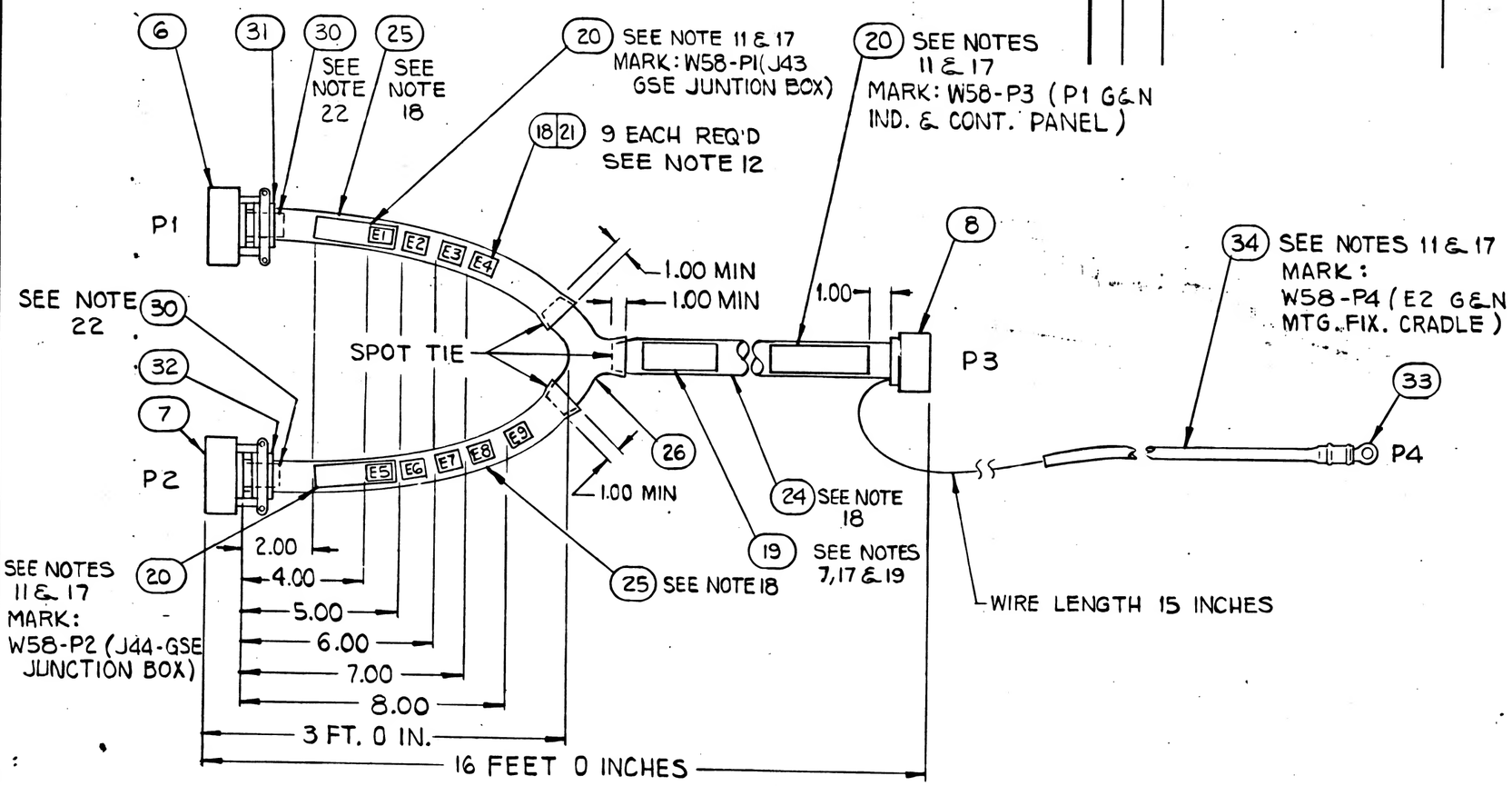

LOCATION TOLERANCE (EXCEPT LENGTH): +.50 -.50

NEXT ASSY	USED ON
APPLICATION	

UNLESS OTHERWISE SPECIFIED DIMENSIONS ARE IN INCHES TOLERANCES ON

FRACTIONS	DECIMALS	ANGLES
+ —	+ —	+ —
− —	− —	− —

DO NOT SCALE THIS DRAWING

MATERIAL

CONTRACT

AC SPARK PLUG DIVISION, GMC
MILWAUKEE, WISCONSIN

ACSP PN

DRAWN WEISSERT DATE 11-NOV-63
CHECKED M. MANNING 25-NOV-63
APPROVAL N. ABRAHAM 25-NOV-63
APPROVAL

NASA APPROVAL

MIT APPROVAL

MANNED SPACECRAFT CENTER
HOUSTON, TEXAS

CABLE, INTERCONNECT W58
ISS, OSS TESTING

CODE IDENT NO. | SIZE C | 1900998

SCALE NONE | SHEET 21 OF 21

MIL 1077C-P

1900998

APPLICATION		REVISIONS			
NEXT ASSY	USED ON	SYM	DESCRIPTION	DATE	APPROVAL
1901308	1900005-011	A	CHANGE IN ACCORDANCE WITH CM193777 10029	4 FEB 64	GG / BZ
		B	CHANGE IN ACCORDANCE WITH CM195032	5 MAR 64	JJJ / GP
		C	CHANGE IN ACCORDANCE WITH CM 200712 REVISED CUSOMER DATA (V2-64)	2 APR 64	JWP / MEM
		D	CHANGE IN ACCORDANCE WITH CM 196300 10039	27 MAY 64	R.B. / CP
		E	CHANGE IN ACCORDANCE WITH CM197538 10688 REVISED CUSTOMER DATA (V2-64)	8 JUNE 64	R.B. / MEM
		F	CHANGE IN ACCORDANCE WITH CM 197761 11263	15 JUNE 64	RK / AU

FOR INFORMATION ONLY

CLASS B RELEASE TDR No. 05653 DATE 1/7/64

NO ECO

REV																							
SHEET																							
REV STATUS OF SHEETS	REV	F	F	F	F	F	F	F	F	F	F	F	F	F	F	F	F	F	F	F	F	F	F
	SHEET	1	2	3	4	5	6	7	8	9	10	11	12	13	14	15	16	17	18	19	20	21	22

AC SPARK PLUG DIVISION, GMC
MILWAUKEE, WISCONSIN

ACSP PN

DRAWN WEISSERT DATE 11-NOV 63
CHECKED 25 NOV 63
APPROVAL 23 NOV 63
APPROVAL 1/8/64

MANNED
SPACECRAFT CENTER
HOUSTON, TEXAS

CABLE, INTERCONNECT W58
ISS, OSS TESTING

NASA APPROVAL
MIT APPROVAL 7 Jan 64

CONTRACT

CODE IDENT NO.	SIZE		REV
	A	1900998	F
SCALE		SHEET 1 OF 22	

PENNANT GENERAL NOTES

NOTE

1 SEE CONDUCTOR CHART, PENNANT NOTE 1.

2 SEE CONDUCTOR CHART, PENNANT NOTE 2.

3 INTERPRET DRAWING IN ACCORDANCE WITH STANDARDS PRESCRIBED BY MIL-D-70327.

4 MARK CONDUCTOR IDENTIFICATION ON SINGLE CONDUCTORS PER ND1002019 OMITTING ALL SUFFIX LETTERS EXCEPT A AND B.

5 SPACING OF CONDUCTOR IDENTIFICATION SHALL BE EVERY 15 INCHES MAX. AND AT EACH TERMINATION.

6 SPIRALLING OF THE MARKING IS ALLOWED.

7 IDENTIFY USING DRAWING NO. AND REVISION LETTER PER MIL-STD-130 (ES-267). .12 INCH HIGH CHARACTERS WHITE.

8 Y OR N IN TINNED COLUMN INDICATES YES OR NO.

9 A LETTER WITH AN ASTERISK SUFFIX, INDICATES A LOWER CASE LETTER.

10 VENDOR ITEM - SEE SPECIFICATION CONTROL DRAWING.

11 MARK IDENTIFICATION BAND WITH REFERENCE DESIGNATION AS NOTED .12 INCH HIGH COLOR WHITE, HOT IMPRESSION STAMPING PER ND1002019. CENTRALIZE.

12 MARK SLEEVING WITH REFERENCE DESIGNATIONS AS SHOWN .12 INCH HIGH, COLOR BLACK PER ND1002019.

13 MARK SLEEVING OF MULTI-CONDUCTORS WITH THE CONDUCTOR NUMBER .12 INCH HIGH, COLOR BLACK, PER ND1002019 WHEN SLEEVING ITEM NUMBERS FOLLOW AN A OR T IN THE ACCESSORIES ITEM NUMBER FIELD.

MANNED SPACECRAFT CENTER HOUSTON, TEXAS	SIZE A	1900998	
SCALE-NONE	REV LTR F		SHEET 2 OF 22

PENNANT GENERAL NOTES

NOTE

14 A OR T PREFIX IN THE ACCESSORIES ITEM NUMBER COLUMN INDICATES THE READING POSITION AWAY FROM TERMINATION OR TOWARD TERMINATION RESPECTIVELY, OF THE WIRE MARKER SLEEVE.

15 THE SUFFIX LETTER OF A CONDUCTOR IDENTIFICATION NUMBER INDICATES CONDUCTOR SHIELDING, COLOR, OR MARKING.
A - FROM END SHIELD
L - WHITE WITH BLUE TRACER OR WHITE WITH LETTER L.
R - WHITE WITH RED TRACER OR WHITE WITH LETTER R.
Y - WHITE WITH YELLOW TRACER

16 ASSEMBLE CONTACTS IN ALL CONNECTOR GROMMET HOLES.

17 SECURE TO CABLE USING ITEM 22, MARKING TO READ AWAY FROM CONNECTOR.

18 SEAL ZIPPER TUBING PER ND1002153

19 SERIALIZE PER ND1002023

20 ITEM 27 FURNISHED WITH ITEM 6

21 ITEM 28 FURNISHED WITH ITEM 7

22 ITEM 30 SHALL BE SHORTENED WHEN NECESSARY TO AVOID INTERFERENCE WITH FERRULES AND MAY BE CUT LENGTHWISE ON ONE SIDE. SELECT ONE OR MORE OF ITEM 30 AS REQUIRED TO FIT.

MANNED SPACECRAFT CENTER HOUSTON, TEXAS	SIZE A	1900998	
SCALE-NONE	REV LTR F		SHEET 3 OF 22

PENNANT GENERAL NOTES

NOTE

TOLERANCE CHART, UNLESS OTHERWISE SPECIFIED ---

APPLICABLE LENGTH FOR WIRE OR CABLE, STRIP WIRE, STRIP JACKET, CUT WIRE OR CUT SHIELD.	TOLERANCE WIRE OR CABLE	STRIP WIRE	STRIP JACKET	CUT WIRE	CUT SHIELD
UNDER 1 INCH	+.06-.00	+.03-.00	+.06-.06	+.06-.06	+.06-.06
1 INCH TO 6 INCHES	+.50-.00	+.06-.00	+.25-.25	+.25-.25	+.25-.25
6 INCHES TO 6 FEET	+1.00-.00		+.50-.50	+.50-.50	+.50-.50
OVER 6 FEET	+2.00-.00				

MANNED SPACECRAFT CENTER HOUSTON, TEXAS	SIZE A	1900998	
SCALE-NONE	REV LTR F		SHEET 4 OF 22

PENNANT LIST OF MATERIALS

NOTE	ITEM	QTY	PART NO	DESCRIPTION
	1	1	1900998-001	WIRE ND1002181, TYPE 1, CLASS 1, WHT, NO. 22AWG 620 FT., 0 IN. TOTAL LENGTH.
	2	1	1900998-002	WIRE ND1002181, TYPE 1, CLASS 4, WHT JKT NO. 22AWG, WHT, 432 FT. 0 IN. TOTAL LENGTH.
	3	1	1900998-003	WIRE ND1002181, TYPE 2, CLASS 4, WHT JKT, NO. 22AWG WHT/BLU, WHT/RED, 180 FT. 0 IN. TOTAL LG.
	4	1	1900998-004	WIRE ND1002181, TYPE 3, CLASS 4, WHT, JKT, NO. 22AWG WHT/BLU, WHT/RED, WHT/YEL 50 FT. 0 IN. TOTAL LENGTH
	5	1	1900998-005	WIRE ND1002181, TYPE 2, CLASS 1, T2, 22AWG WHT WITH LETTER L, WHT WITH LETTER R 35 FT. 0 IN. TOTAL LENGTH.
16	6	1	MS3126F-24-61SX (189704B-612)	CONNECTOR
16	7	1	MS3126F-22-55PW (189704S-591)	CONNECTOR
10	8	1	1010411- 1	CONNECTOR
10	9	25	1000243- 3	FERRULE, ELECT. COND.
10	10	25	1000242- 2	FERRULE, ELECT. COND.
10	11	9	1000243- 8	FERRULE, ELECT. COND.
10	12	9	1000242- 7	FERRULE, ELECT. COND.
10	13	3	1000243- 11	FERRULE, ELECT. COND.
10	14	3	1000242- 11	FERRULE, ELECT. COND.
10	15	6	1010490-196	INSULATION, SLEEVING, ELECT.

MANNED SPACECRAFT CENTER HOUSTON, TEXAS	SIZE A	1900998	
SCALE-NONE	REV LTR F		SHEET 5 OF 22

LIST OF MATERIALS

PENNANT NOTE	ITEM	QTY	PART NO	DESCRIPTION
10	16	43	1010490-198	INSULATION, SLEEVING, ELECT.
10	17	25	1010490-200	INSULATION, SLEEVING, ELECT.
10	18	9	1010490-258	INSULATION, SLEEVING, ELECT.
10	19	1	1016128-011	BAND, IDENTIFICATION
10	20	3	1016128-041	BAND, IDENTIFICATION
10	21	9	1016006-802	SPLICE REDUCER
10	22	108	1010464- 2	CONNECTOR, CONTACT, PIN
	23	AR	MIL-T-713	LACING, TAPE, TYPE P, CLASS 2, BLACK (ES-2792 NO. 18)
	24	1	1900998-006	ZIPPER TUBING, ND1002155, TYPE 1, PLASTIC, FLEXIBLE 1.125 IN. DIA X 13 FT. 0 IN. TOT. LG.
	25	2	1900998-007	ZIPPER TUBING, ND1002155, TYPE 1, PLASTIC, FLEXIBLE 1.0 IN. DIA X 6 FT. 0 IN. TOTAL LG.
10	26	1	1016184-002	TRANSITION, HARNESS, 3 FINGER, HEAT SHRINK
20	27			CONNECTOR CONTACT, SOCKET
21	28			CONNECTOR CONTACT, PIN
10	29	4	1010490-188	INSULATION, SLEEVING, ELECT.
22	30	AR	1897147-106,-108,-112	CABLE CLAMP SLEEVE
10	31	1	1016282- 24	RUBBER GROMMET
10	32	1	1016282- 22	RUBBER GROMMET

MANNED SPACECRAFT CENTER HOUSTON, TEXAS | SIZE A | 1900998
SCALE-NONE | REV LTR F | SHEET 6 OF 22

LIST OF MATERIALS

PENNANT NOTE	ITEM	QTY	PART NO	DESCRIPTION
10	33	1	1015902- 46	TERMINAL LUG
	34	9	1900998-008	TUBING, MODIFIED POLYVINYL CHLORIDE, FLEXIBLE SHRINK-FIT PER 1016197-006 6 INCH ~~[illegible]~~
	35	2	MS24055-2	CONNECTOR
	36	2	MS24018-1	CONNECTOR HOOD

MANNED SPACECRAFT CENTER HOUSTON, TEXAS | SIZE A | 1900998
SCALE-NONE | REV LTR F | SHEET 7 OF 22

CONDUCTOR NUMBER	ITEM NO.	▷	FROM: CUT WIRE OR SHIELD / STRIP WIRE OR JACKET / CIRCUIT POINT	▷	T	N	▷	TERMINATION SPEC. ▷ / ITEM NO.	NO.	TO: CUT WIRE OR SHIELD / STRIP WIRE OR JACKET / CIRCUIT POINT	▷	T	N	▷	TERMINATION SPEC ▷ / ITEM NO.	NO.
A 1	1		P4- 1	25N			33			P3- 91	22N			22		
A 2			DELETED													
			DELETED													
A 2A			DELETED													
A 2L			DELETED													
A 2R			DELETED													
A 3			DELETED													
			DELETED													
A 3A			DELETED													
A 3W			DELETED													
A 4	2			230	200	9	10	5			230	200	A 17	7A		
							A 16									
A 4A	1		SHLD A4	37N						E1	37N					
A 4W			P1-E	22N			27			P3- 54	22N			22		
A 5	1		P1-F	22N			27			P3- 26	22N			22		
A 6	1		P1-G	22N			27			P3- 83	22N			22		
A 7	3			230	200	11	12	5			230	200	A 16	7A		
							A 16									

▷ THE STD CONDUCTOR TERMINATION FIGURES ARE PER
▷ DIMENSIONS ARE IN INCHES AND TWO PLACE DECIMALS.

MANNED SPACECRAFT CENTER HOUSTON, TEXAS | SIZE A | 1900998
SCALE-NONE | REV LTR F | SHEET 8 OF 22

CONDUCTOR NUMBER	ITEM NO.	▷	FROM: CUT WIRE OR SHIELD / STRIP WIRE OR JACKET / CIRCUIT POINT	▷	T	N	▷	TERMINATION SPEC. ▷ / ITEM NO.	NO.	TO: CUT WIRE OR SHIELD / STRIP WIRE OR JACKET / CIRCUIT POINT	▷	T	N	▷	TERMINATION SPEC. ▷ / ITEM NO.	NO.
A 7A	1		SHLD A7	37N						E1	37N					
A 7L			P1-J	22N			27			P3- 12	22N			22		
A 7R			P1-H	22N			27			P3- 11	22N			22		
A 8	5						A 29							A 29		
A 8L			P1-L	22N			27			P3- 40	22N			22		
A 8R			P1-K	22N			27			P3- 41	22N			22		
A 9	1		P1-N	22N			27			P3- 43	22N			22		
A 10	1		P1-P	22N			27			P3- 71	22N			22		
A 11	3			230	200	11	12	5			230	200	A 16	7A		
							A 16									
A 11A	1		SHLD A11	37N						E1	37N					
A 11L			P1-S	22N			27			P3- 53	22N			22		
A 11R			DELETED													
A 12	3			230	200	11	12	5			230	200	A 16	7A		
							A 16									
A 12A	1		SHLD A12	37N						E1	37N					
A 12L			P1-U	22N			27			P3- 52	22N			22		
A 12R			DELETED													

▷ THE STD CONDUCTOR TERMINATION FIGURES ARE PER
▷ DIMENSIONS ARE IN INCHES AND TWO PLACE DECIMALS.

MANNED SPACECRAFT CENTER HOUSTON, TEXAS | SIZE A | 1900998
SCALE-NONE | REV LTR F | SHEET 9 OF 22

GJK CABLE W-58 F 1900998

CONDUCTOR INDIVIDUAL LENGTH NUMBER	ITEM NO.	FROM CUT WIRE OR SHIELD STRIP WIRE OR JACKET CIRCUIT POINT	TYPE	SIZE	TERMINATION SPEC. ITEM NO.	NO.	TO CUT WIRE OR SHIELD STRIP WIRE OR JACKET CIRCUIT POINT	TYPE	SIZE	TERMINATION SPEC. ITEM NO.	NO.
A 13	1	P1-V	22N	27			P3- 1	22N	22		
A 14	1	P1-W	22N	27			P3- 60	22N	22		
A 15	1	P1-X	22N	27			P3- 2	22N	22		
A 16	1	P1-Y	22N	27			P3- 96	22N	22		
A 17	1	P1-Z	22N	27			P3- 95	22N	22		
A 18	1	P1-A*	22N	27			E4	37N			
A 19	1	P1-B*	22N	27			P3- 93	22N	22		
A 20	1	P1-C*	22N	27			P3- 51	22N	22		
A 21	1	P1-D*	22N	27			P3-106	22N	22		
A 22	1	P1-E*	22N	27			P3- 77	22N	22		
A 23	1	P1-F*	22N	27			P3- 65	22N	22		
A 24	2		28C	25C	9 10 / A 16	5		28C	25C	A 17	7A
A 24A	1	SHLD A24	37N				E2	37N			
A 24W		P1-G*	22N	27			P3- 85	22N	27		
A 25	2		28C	25C	9 10 / A 16	5		28C	25C	A 17	7A
A 25A	1	SHLD A25	37N				E2	37N			

▷ THE STD CONDUCTOR TERMINATION FIGURES ARE PER
▷ DIMENSIONS ARE IN INCHES AND TWO PLACE DECIMALS.

MANNED SPACECRAFT CENTER HOUSTON, TEXAS | SIZE A | 1900998 | SCALE - NONE | REV LTR F | SHEET 10 OF 22

GJK CABLE W-58 F 1900998

CONDUCTOR INDIVIDUAL LENGTH NUMBER	ITEM NO.	FROM CUT WIRE OR SHIELD STRIP WIRE OR JACKET CIRCUIT POINT	TYPE	SIZE	TERMINATION SPEC. ITEM NO.	NO.	TO CUT WIRE OR SHIELD STRIP WIRE OR JACKET CIRCUIT POINT	TYPE	SIZE	TERMINATION SPEC. ITEM NO.	NO.
A 25W		P1-H*	22N	27			P3- 98	22N	22		
A 26	1	P1-I*	22N	27			P3- 42	22N	22		
A 27	5			A 29					A 29		
A 27L		P1-K*	22N	27			P3- 69	22N	22		
A 27R		P1-J*	22N	27			P3- 80	22N	22		
A 28	2		28C	25C	9 10 / A 16	5		28C	25C	A 17	7A
A 28A	1	SHLD A28	37N				E2	37N			
A 28W		P1-M*	22N	27			P3- 92	22N	22		
A 29	2		28C	25C	9 10 / A 16	5		28C	25C	A 17	7A
A 29A	1	SHLD A29	37N				E2	37N			
A 29W		P1-N*	22N	27			P3- 74	22N	22		
A 30	2		28C	25C	9 10 / A 16	5		28C	25C	A 17	7A
A 30A	1	SHLD A30	37N				E2	37N			
A 30W		P1-P*	22N	27			P3- 90	22N	22		
A 31	2		28C	25C	9 10	5		28C	25C	A 17	7A

▷ THE STD CONDUCTOR TERMINATION FIGURES ARE PER
▷ DIMENSIONS ARE IN INCHES AND TWO PLACE DECIMALS.

MANNED SPACECRAFT CENTER HOUSTON, TEXAS | SIZE A | 1900998 | SCALE - NONE | REV LTR F | SHEET 11 OF 22

GJK CABLE W-58 F 1900998

CONDUCTOR INDIVIDUAL LENGTH NUMBER	ITEM NO.	FROM CUT WIRE OR SHIELD STRIP WIRE OR JACKET CIRCUIT POINT	TYPE	SIZE	TERMINATION SPEC. ITEM NO.	NO.	TO CUT WIRE OR SHIELD STRIP WIRE OR JACKET CIRCUIT POINT	TYPE	SIZE	TERMINATION SPEC. ITEM NO.	NO.
					A 16						
A 31A	1	SHLD A31	37N				E2	37N			
A 31W		P1-Q*	22N	27			P3-100	22N	22		
A 32	3		33C	30C	11 12 / A 16	5		33C	30C	A 16	7A
A 32A	1	SHLD A32	37N				E3	37N			
A -32L		P1-S*	22N	27			P3- 47	22N	22		
A 32R		P1-R*	22N	27			P3- 56	22N	22		
A 33	3		33C	30C	11 12 / A 16	5		33C	30C	A 16	7A
A 33A	1	SHLD A33	37N				E3	37N			
A 33L		P1-U*	22N	27			P3- 57	22N	22		
A 33R		P1-T*	22N	27			P3- 48	22N	22		
A 34	1	P1-V*	22N	27			P3- 36	22N	22		
A 35	1	P1-W*	22N	27			P3- 94	22N	22		
A 36	4		33C	30C	13 14 / A 15	5		33C	30C	A 15	7A
A 36A	1	SHLD A36	37N				E3	37N			

▷ THE STD CONDUCTOR TERMINATION FIGURES ARE PER
▷ DIMENSIONS ARE IN INCHES AND TWO PLACE DECIMALS.

MANNED SPACECRAFT CENTER HOUSTON, TEXAS | SIZE A | 1900998 | SCALE - NONE | REV LTR F | SHEET 12 OF 22

GJK CABLE W-58 F 1900998

CONDUCTOR INDIVIDUAL LENGTH NUMBER	ITEM NO.	FROM CUT WIRE OR SHIELD STRIP WIRE OR JACKET CIRCUIT POINT	TYPE	SIZE	TERMINATION SPEC. ITEM NO.	NO.	TO CUT WIRE OR SHIELD STRIP WIRE OR JACKET CIRCUIT POINT	TYPE	SIZE	TERMINATION SPEC. ITEM NO.	NO.
A 36L		P1-Y*	22N	27			P3- 17	22N	22		
A 36R		P1-X*	22N	27			P3- 3	22N	22		
A 36Y		P1-Z*	22N	27			P3- 16	22N	22		
A 37	3		33C	30C	11 12 / A 16	5		33C	30C	A 16	7A
A 37A	1	SHLD A37	37N				E3	37N			
A 37L		P1-BB	22N	27			P3- 27	22N	22		
A 37R		P1-AA	22N	27			P3- 13	22N	22		
A 38	4		33C	30C	13 14 / A 15	5		33C	30C	A 15	7A
A 38A	1	SHLD A38	37N				E3	37N			
A 38L		P1-DD	22N	27			P3- 6	22N	22		
A 38R		P1-CC	22N	27			P3- 20	22N	22		
A 38Y		P1-EE	22N	27			P3- 7	22N	22		
A 39	4		33C	30C	13 14 / A 15	5		33C	30C	A 15	7A
A 39A	1	SHLD A39	37N				E3	37N			
A 39L		P1-GG	22N	27			P3- 5	22N	22		

▷ THE STD CONDUCTOR TERMINATION FIGURES ARE PER
▷ DIMENSIONS ARE IN INCHES AND TWO PLACE DECIMALS.

MANNED SPACECRAFT CENTER HOUSTON, TEXAS | SIZE A | 1900998 | SCALE - NONE | REV LTR F | SHEET 13 OF 22

GJK CABLE W-58 F 1900998

CONDUCTOR NUMBER	ITEM NO.	INDIVIDUAL LENGTH	FROM CUT WIRE OR SHIELD STRIP WIRE OR JACKET CIRCUIT POINT				TERMINATION SPEC.	ITEM NO.			TO CUT WIRE OR SHIELD STRIP WIRE OR JACKET CIRCUIT POINT				TERMINATION SPEC.	ITEM NO.			
A 39R			P1-FF	22N			27				P3- 4	22N			22				
A 39Y			P1-HH	22N			27				P3- 18	22N			22				
A 40	2			23C	20C		9	10	5			23C	20C		A	17	7A		
							A	16											
A 40A	1		SHLD A40	37N							E5	37N							
A 40W			P2-A	22N			28				P3- 39	22N			22				
A 41	2			23C	20C		9	10	5			23C	20C		A	17	7A		
							A	16											
A 41A	1		SHLD A41	37N							E5	37N							
A 41W			P2-B	22N			28				P3- 73	22N			22				
A 42	2			23C	20C		9	10	5			23C	20C		A	17	7A		
							A	16											
A 42A	1		SHLD A42	37N							E5	37N							
A 42W			P2-C	22N			28				P3- 10	22N			22				
A 43	3			23C	20C		11	12	5			23C	20C		A	16	7A		
							A	16											
A 43A	1		SHLD A43	37N							E5	37N							
A 43L			P2-E	22N			28				P3- 23	22N			22				

THE STD CONDUCTOR TERMINATION FIGURES ARE PER

DIMENSIONS ARE IN INCHES AND TWO PLACE DECIMALS.

MANNED SPACECRAFT CENTER HOUSTON, TEXAS | SIZE A | 1900998

SCALE - NONE | REV LTR F | SHEET 14 OF 22

GJK CABLE A-: F 1900998

CONDUCTOR NUMBER	ITEM NO.	INDIVIDUAL LENGTH	FROM CUT WIRE OR SHIELD STRIP WIRE OR JACKET CIRCUIT POINT				TERMINATION SPEC.	ITEM NO.			TO CUT WIRE OR SHIELD STRIP WIRE OR JACKET CIRCUIT POINT				TERMINATION SPEC.	ITEM NO.			
A 43R			P2-D	22N			28				P3- 24	22N			22				
A 44	3			23C	20C		11	12	5			23C	20C		A	16	7A		
							A	16											
A 44A	1		SHLD A44	37N							E5	37N							
A 44L			P2-G	22N			28				P3- 34	22N			22				
A 44R			P2-F	22N			28				P3- 35	22N			22				
A 45	3			23C	20C		11	12	5			23C	20C		A	16	7A		
							A	16											
A 45A	1		SHLD A45	37N							E5	37N							
A 45L			P2-J	22N			28				P3- 33	22N			22				
A 45R			P2-H	22N			28				P3- 19	22N			22				
A 46	1		P2-K	22N			28				P3- 99	22N			22				
A 47			DELETED																
			DELETED																
A 47A			DELETED																
A 47L			DELETED																
A 47R			DELETED																
A 48			DELETED																

THE STD CONDUCTOR TERMINATION FIGURES ARE PER

DIMENSIONS ARE IN INCHES AND TWO PLACE DECIMALS.

MANNED SPACECRAFT CENTER HOUSTON, TEXAS | SIZE A | 1900998

SCALE - NONE | REV LTR F | SHEET 15 OF 22

GJK CABLE W-58 F 1900998

CONDUCTOR NUMBER	ITEM NO.	INDIVIDUAL LENGTH	FROM CUT WIRE OR SHIELD STRIP WIRE OR JACKET CIRCUIT POINT				TERMINATION SPEC.	ITEM NO.			TO CUT WIRE OR SHIELD STRIP WIRE OR JACKET CIRCUIT POINT				TERMINATION SPEC.	ITEM NO.			
A 48A			DELETED																
A 48W			DELETED																
A 49	1		P2-R	22N			28				P3- 14	22N			22				
A 50	1		P2-S	22N			28				P3- 50	22N			22				
A 51	1		P2-T	22N			28				P3- 21	22N			22				
A 52	1		P2-U	22N			28				P3- 70	22N			22				
A 53	2			28C	25C		9	10	5			28C	25C		A	17	7A		
							A	16											
A 53A	1		SHLD A53	37N							E6	37N							
A 53W			P2-V	22N			28				P3- 82	22N			22				
A 54	1		P2-W	22N			28				P3- 58	22N			22				
A 55	1		P2-X	22N			28				P3- 59	22N			22				
A 56	1		P2-Y	22N			28				P3- 66	22N			22				
A 57	1		P2-Z	22N			28				P3- 78	22N			22				
A 58	1		P2-A*	22N			28				E9	37N							
A 59	1		P2-B*	22N			28				P3- 81	22N			22				
A 60	1		P2-C*	22N			28				P3- 79	22N			22				

THE STD CONDUCTOR TERMINATION FIGURES ARE PER

DIMENSIONS ARE IN INCHES AND TWO PLACE DECIMALS.

MANNED SPACECRAFT CENTER HOUSTON, TEXAS | SIZE A | 1900998

SCALE - NONE | REV LTR F | SHEET 16 OF 22

GJK CABLE W-58 F 1900998

CONDUCTOR NUMBER	ITEM NO.	INDIVIDUAL LENGTH	FROM CUT WIRE OR SHIELD STRIP WIRE OR JACKET CIRCUIT POINT				TERMINATION SPEC.	ITEM NO.			TO CUT WIRE OR SHIELD STRIP WIRE OR JACKET CIRCUIT POINT				TERMINATION SPEC.	ITEM NO.			
A 61	1		P2-D*	22N			28				P3- 68	22N			22				
A 62	1		P2-E*	22N			28				P3- 67	22N			22				
A 63	2			28C	25C		9	10	5			28C	25C		A	17	7A		
							A	16											
A 63A	1		SHLD A63	37N							E6	37N							
A 63W			P2-F*	22N			28				P3- 89	22N			22				
A 64	2			28C	25C		9	10	5			28C	25C		A	17	7A		
							A	16											
A 64A	1		SHLD A64	37N							E6	37N							
A 64W			P2-G*	22N			28				P3-104	22N			22				
A 65	2			28C	25C		9	10	5			28C	25C		A	17	7A		
							A	16											
A 65A	1		SHLD A65	37N							E6	37N							
A 65W			P2-H*	22N			28				P3- 97	22N			22				
A 66	2			33C	30C		9	10	5			33C	30C		A	17	7A		
							A	16											
A 66A	1		SHLD A66	37N							E7	37N							
A 66W			P2-J*	22N			28				P3- 86	22N			22				

THE STD CONDUCTOR TERMINATION FIGURES ARE PER

DIMENSIONS ARE IN INCHES AND TWO PLACE DECIMALS.

MANNED SPACECRAFT CENTER HOUSTON, TEXAS | SIZE A | 1900998

SCALE - NONE | REV LTR F | SHEET 17 OF 22

CONDUCTOR NUMBER	ITEM NO.	FROM CUT WIRE OR SHIELD STRIP WIRE OR JACKET CIRCUIT POINT	T/S	TERMINATION SPEC.	ITEM NO.	NO.	TO CUT WIRE OR SHIELD STRIP WIRE OR JACKET CIRCUIT POINT	T/S	TERMINATION SPEC.	ITEM NO.	NO.
A 67	2		350	300	9 10 A 16	5		350	300	A 17	7A
A 67A	1	SHLD A67	37N				E7	37N			
A 67W		P2-K*	22N		28		P3-102	22N		22	
A 68	1	P2-M*	22N		28		P3- 37	22N		22	
A 69	1	P2-N*	22N		28		P3- 30	22N		22	
A 70	1	P2-P*	22N		28		P3- 31	22N		22	
A 71	1	P2-R*	22N		28		P3- 55	22N		22	
A 72	1	P2-S*	22N		28		P3- 46	22N		22	
A 72	2		350	300	9 10 A 16	5		350	300	A 17	7A
A 72A	1	SHLD A72	37N				E7	37N			
A 72W		P2-T*	22N		28		P3- 88	22N		22	
A 73	2		350	300	9 10 A 16	5		350	300	A 17	7A
A 73A	1	SHLD A73	37N				E7	37N			
A 73W		P2-U*	22N		28		P3- 87	22N		22	
A 74	2		350	300	9 10	5		350	300	A 17	7A

▷ THE STD CONDUCTOR TERMINATION FIGURES ARE PER
▷ DIMENSIONS ARE IN INCHES AND TWO PLACE DECIMALS.

MANNED SPACECRAFT CENTER HOUSTON, TEXAS | SIZE A | 1900998
SCALE - NONE | REV LTR F | SHEET 18 OF 22

CONDUCTOR NUMBER	ITEM NO.	FROM CUT WIRE OR SHIELD STRIP WIRE OR JACKET CIRCUIT POINT	T/S	TERMINATION SPEC.	ITEM NO.	NO.	TO CUT WIRE OR SHIELD STRIP WIRE OR JACKET CIRCUIT POINT	T/S	TERMINATION SPEC.	ITEM NO.	NO.
					A 16						
A 74A	1	SHLD A74	37N				E7	37N			
A 74W		P2-V*	22N		28		P3-101	22N		22	
A 75	2		350	300	9 10 A 16	5		350	300	A 17	7A
A 75A	1	SHLD A75	37N				E7	37N			
A 75W		P2-K*	22N		28		P3- 76	22N		22	
A 76	2		380	350	9 10 A 16	5		380	350	A 17	7A
A 76A	1	SHLD A76	37N				E8	37N			
A 76W		P2-X*	22N		28		P3- 75	22N		22	
A 77	2		380	350	9 10 A 16	5		380	350	A 17	7A
A 77A	1	SHLD A77	37N				E8	37N			
A 77W		P2-Y*	22N		28		P3-105	22N		22	
A 78	2		380	350	9 10 A 16	5		380	350	A 17	7A
A 78A	1	SHLD A78	37N				E8	37N			

▷ THE STD CONDUCTOR TERMINATION FIGURES ARE PER
▷ DIMENSIONS ARE IN INCHES AND TWO PLACE DECIMALS.

MANNED SPACECRAFT CENTER HOUSTON, TEXAS | SIZE A | 1900998
SCALE - NONE | REV LTR F | SHEET 19 OF 22

CONDUCTOR NUMBER	ITEM NO.	FROM CUT WIRE OR SHIELD STRIP WIRE OR JACKET CIRCUIT POINT	T/S	TERMINATION SPEC.	ITEM NO.	NO.	TO CUT WIRE OR SHIELD STRIP WIRE OR JACKET CIRCUIT POINT	T/S	TERMINATION SPEC.	ITEM NO.	NO.
A 78W		P2-AA	22N		28		P3- 49	22N		22	
A 79	2		380	350	9 10 A 16	5		380	350	A 17	7A
A 79A	1	SHLD A79	37N				E8	37N			
A 79W		P2-BB	22N		28		P3- 38	22N		22	
A 80	1	P2-CC	22N		28		P3- 72	22N		22	
A 81	1	P2-DD	22N		28		P3- 25	22N		22	
A 82	1	E1	37N				E4	37N			
A 83	1	E2	37N				E4	37N			
A 84	1	E3	37N				E4	37N			
A 85	1	E5	37N				E9	37N			
A 86	1	E6	37N				E9	37N			
A 87	1	E7	37N				E9	37N			
A 88	1	E8	37N				E9	37N			
A 89	2		380	350	9 10 A 16	5		380	350	A 17	7A
A 89A	1	SHLD A89	37N				E8	37N			
A 89W		P2-I*	22N		28		P3-103	22N		22	

▷ THE STD CONDUCTOR TERMINATION FIGURES ARE PER
▷ DIMENSIONS ARE IN INCHES AND TWO PLACE DECIMALS.

MANNED SPACECRAFT CENTER HOUSTON, TEXAS | SIZE A | 1900998
SCALE - NONE | REV LTR F | SHEET 20 OF 22

CONDUCTOR NUMBER	ITEM NO.	FROM CUT WIRE OR SHIELD STRIP WIRE OR JACKET CIRCUIT POINT	T/S	TERMINATION SPEC.	ITEM NO.	NO.	TO CUT WIRE OR SHIELD STRIP WIRE OR JACKET CIRCUIT POINT	T/S	TERMINATION SPEC.	ITEM NO.	NO.
A 90	1	P5-D	25Y				P3-61	10N		22	
A 91	1	P5-C	25Y				P3-62	10N		22	
A 92	1	P5-B	25Y				P3-29	10N		22	
A 93	1	P6-B	25Y				P3-63	10N		22	
A 94	1	P6-C	25Y				P3-84	10N		22	
A 95	1	P6-D	25Y				P3-84	10N		22	
A 96	1	P6-E	25Y				P3-32	10N		22	
A 97	1	P6-F	25Y				P3-44	10N		22	

▷ THE STD CONDUCTOR TERMINATION FIGURES ARE PER
▷ DIMENSIONS ARE IN INCHES AND TWO PLACE DECIMALS.

MANNED SPACECRAFT CENTER HOUSTON, TEXAS | SIZE A | 1900998
SCALE - NONE | REV LTR F | SHEET 21 OF 22

REVISIONS					
SYM	ZONE	DESCRIPTION	CHG NO.	DATE	APPD.
		SEE SHEET 1 FOR REVISION RECORD			

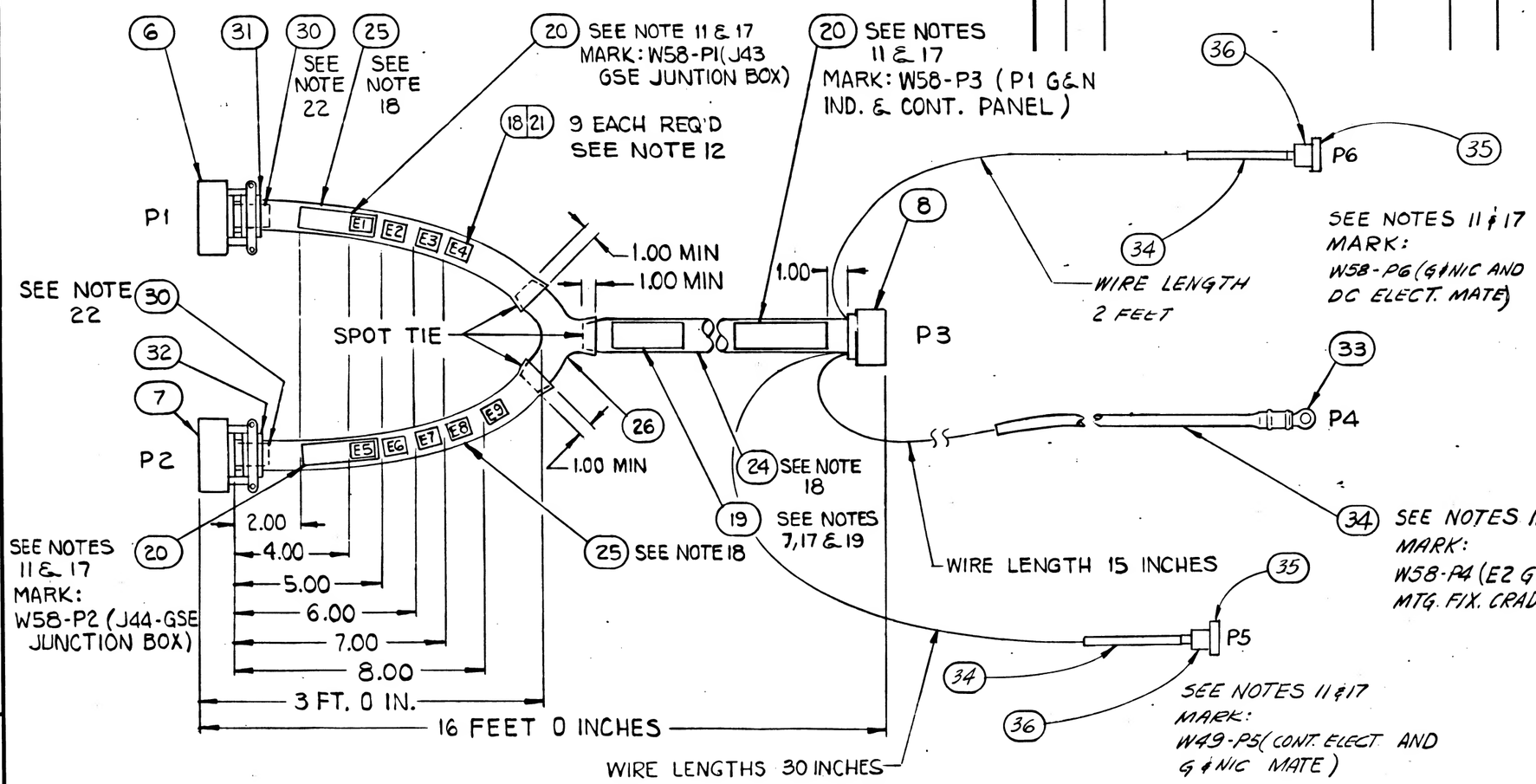

LOCATION TOLERANCE (EXCEPT LENGTH): +.50 -.50

NEXT ASSY	USED ON
APPLICATION	

UNLESS OTHERWISE SPECIFIED
DIMENSIONS ARE IN INCHES
TOLERANCES ON
FRACTIONS ± — DECIMALS ± — ANGLES ± —
DO NOT SCALE THIS DRAWING
MATERIAL
CONTRACT NAS 9-497

AC SPARK PLUG DIVISION, GMC
MILWAUKEE, WISCONSIN
ACSP PN
DRAWN WEISSERT DATE 11-NOV-63
CHECKED M. MANNING 25-NOV-63
APPROVAL N. ABRAHAM 25-NOV-63
APPROVAL
NASA APPROVAL
MIT APPROVAL

MANNED SPACECRAFT CENTER
HOUSTON, TEXAS

CABLE, INTERCONNECT W58
ISS, OSS TESTING

CODE IDENT NO. | SIZE C | 1900998
SCALE NONE | SHEET 22 OF 22

MIL 1077C-P

1900998

APPLICATION		REVISIONS			
NEXT ASSY	USED ON	SYM	DESCRIPTION	DATE	APPROVAL
1901308	1900005-011	A	CHANGE IN ACCORDANCE WITH CM193777 TDR R 10029	4 FEB 64	GG / PZ
		B	CHANGE IN ACCORDANCE WITH CM195052	3 MAR 64	JJJ / CP
		C	CHANGE IN ACCORDANCE WITH CM 200712 REVISED CUSOMER DATA (V2-64)	2 APR 64	JWP / MEM
		D	CHANGE IN ACCORDANCE WITH CM 196300 TDRC 10230	27 MAY 64	R.B. / CP
		E	CHANGE IN ACCORDANCE WITH CM197538 TDRR10688 REVISED CUSTOMER DATA (V2-64)	8 JUNE 64	R.B. / MEM
		F	CHANGE IN ACCORDANCE WITH CM 197761 FLA44108F	15 JUNE 64	MK / AU
		G	CHANGE IN ACCORDANCE WITH CM 198198 11261	18 JUN 64	JWP / EF

FOR INFORMATION ONLY

CLASS B RELEASE TDR No. 25053 **DATE** 1/7/69

REV																						
SHEET																						
REV STATUS REPR	G	E	F	F	G	E	F	F	E	F	F	G	F	E	F	F	F	E	F	F	G	E
OF THIS SHEET	1	2	3	4	5	6	7	8	9	10	11	12	13	14	15	16	17	18	19	20	21	22

AC SPARK PLUG DIVISION, GMC MILWAUKEE, WISCONSIN	MANNED SPACECRAFT CENTER HOUSTON, TEXAS
ASP PN	
DRAWN WEISSERT DATE 11-NOV 63 CHECKED 25 NOV 63 APPROVAL 25 NOV 63 APPR	CABLE, INTERCONNECT W58 ISS, OSS TESTING
NASA APPROVAL MIT APPROVAL	CODE IDENT NO: SIZE A: 1900998: REV G
CONTRACT	SCALE: SHEET 1 OF 22

PENNANT NOTE — GENERAL NOTES

1. SEE CONDUCTOR CHART, PENNANT NOTE 1.
2. SEE CONDUCTOR CHART, PENNANT NOTE 2.
3. INTERPRET DRAWING IN ACCORDANCE WITH STANDARDS PRESCRIBED BY MIL-D-70327.
4. MARK CONDUCTOR IDENTIFICATION ON SINGLE CONDUCTORS PER ND1002019 OMITTING ALL SUFFIX LETTERS EXCEPT A AND B.
5. SPACING OF CONDUCTOR IDENTIFICATION SHALL BE EVERY 15 INCHES MAX. AND AT EACH TERMINATION.
6. SPIRALLING OF THE MARKING IS ALLOWED.
7. IDENTIFY USING DRAWING NO. AND REVISION LETTER PER MIL-STD-130 (ES-267). .12 INCH HIGH CHARACTERS WHITE.
8. Y OR N IN TINNED COLUMN INDICATES YES OR NO.
9. A LETTER WITH AN ASTERISK SUFFIX, INDICATES A LOWER CASE LETTER.
10. VENDOR ITEM - SEE SPECIFICATION CONTROL DRAWING.
11. MARK IDENTIFICATION BAND WITH REFERENCE DESIGNATION AS NOTED .12 INCH HIGH COLOR WHITE, HOT IMPRESSION STAMPING PER ND1002019. CENTRALIZE.
12. MARK SLEEVING WITH REFERENCE DESIGNATIONS AS SHOWN .12 INCH HIGH, COLOR BLACK PER ND1002019.
13. MARK SLEEVING OF MULTI-CONDUCTORS WITH THE CONDUCTOR NUMBER .12 INCH HIGH, COLOR BLACK, PER ND1002019 WHEN SLEEVING ITEM NUMBERS FOLLOW AN A OR T IN THE ACCESSORIES ITEM NUMBER FIELD.

PENNANT NOTE — GENERAL NOTES

14. A OR T PREFIX IN THE ACCESSORIES ITEM NUMBER COLUMN INDICATES THE READING POSITION AWAY FROM TERMINATION OR TOWARD TERMINATION RESPECTIVELY, OF THE WIRE MARKER SLEEVE.
15. THE SUFFIX LETTER OF A CONDUCTOR IDENTIFICATION NUMBER INDICATES CONDUCTOR SHIELDING, COLOR, OR MARKING.
    - A - FROM END SHIELD
    - L - WHITE WITH BLUE TRACER OR WHITE WITH LETTER L.
    - R - WHITE WITH RED TRACER OR WHITE WITH LETTER R.
    - Y - WHITE WITH YELLOW TRACER
16. ASSEMBLE CONTACTS IN ALL CONNECTOR GROMMET HOLES.
17. SECURE TO CABLE USING ITEM 22, MARKING TO READ AWAY FROM CONNECTOR.
18. SEAL ZIPPER TURING PER ND1002153
19. SERIALIZE PER ND1002023
20. ITEM 27 FURNISHED WITH ITEM 6
21. ITEM 28 FURNISHED WITH ITEM 7
22. ITEM 30 SHALL BE SHORTENED WHEN NECESSARY TO AVOID INTERFERENCE WITH FERRULES AND MAY BE CUT LENGTHWISE ON ONE SIDE. SELECT ONE OR MORE OF ITEM 30 AS REQUIRED TO FIT.

PENNANT NOTE — GENERAL NOTES

TOLERANCE CHART, UNLESS OTHERWISE SPECIFIED ---

APPLICABLE LENGTH FOR WIRE OR CABLE, STRIP WIRE, STRIP JACKET, CUT WIRE OR CUT SHIELD.

	TOLERANCE				
	WIRE OR CABLE	WIRE	STRIP JACKET	WIRE	CUT SHIELD
UNDER 1 INCH	+ .06-.00	+.03-.00	+.06-.06	+.06-.06	+.06-.06
1 INCH TO 6 INCHES	+ .50-.00	+.06-.00	+.25-.25	+.25-.25	+.25-.25
6 INCHES TO 6 FEET	+1.00-.00		+.50-.50	+.50-.50	+.50-.50
OVER 6 FEET	+2.00-.00				

PENNANT NOTE — LIST OF MATERIALS

NOTE	ITEM	QTY.	PART NO	DESCRIPTION
	1	1	1900998-001	WIRE ND1002181, TYPE 1, CLASS 1, WHT, NO. 22AWG 770 FT., 0 IN. TOTAL LENGTH.
	2	1	1900998-002	WIRE ND1002181, TYPE 1, CLASS 4, WHT JKT NO. 22AWG, WHT, 432 FT. 0 IN. TOTAL LENGTH.
	3	1	1900998-003	WIRE ND1002181, TYPE 2, CLASS 4, WHT JKT, NO. 22AWG WHT/BLU, WHT/RED, 112 FT. 0 IN. TOTAL LG.
	4	1	1900998-004	WIRE ND1002181, TYPE 3, CLASS 4, WHT, JKT, NO. 22AWG WHT/BLU, WHT/RED, WHT/YEL 50 FT. 0 IN. TOTAL LENGTH
	5	1	1900998-005	WIRE ND1002181, TYPE 2, CLASS 1, T2, 22AWG WHT WITH LETTER L, WHT WITH LETTER R 35 FT. 0 IN. TOTAL LENGTH.
16	6	1	MS3126F-24-61SX (1897045-612)	CONNECTOR
16	7	1	MS3126F-22-55PW (1897045-551)	CONNECTOR
10	8	1	1010411- 1	CONNECTOR
10	9	29	1000243- 3	FERRULE, ELECT. COND.
10	10	23	1000242- 2	FERRULE, ELECT. COND.
10	11	6	1000243- 8	FERRULE, ELECT. COND.
10	12	6	1000242- 7	FERRULE, ELECT. COND.
10	13	3	1000243- 11	FERRULE, ELECT. COND.
10	14	3	1000242- 11	FERRULE, ELECT. COND.
10	15	6	1010490-195	INSULATION, SLEEVING, ELECT.

PENNANT LIST OF MATERIALS

NOTE	ITEM	QTY	PART NO	DESCRIPTION
10	16	43	1010490-198	INSULATION, SLEEVING, ELECT.
10	17	25	1010490-200	INSULATION, SLEEVING, ELECT.
10	18	9	1010490-258	INSULATION, SLEEVING, ELECT.
10	19	1	1016128-011	BAND, IDENTIFICATION
10	20	3	1016128-041	BAND, IDENTIFICATION
10	21	9	1016006-002	SPLICE REDUCER
10	22	100	1010464- 2	CONNECTOR, CONTACT, PIN
	23	AR	MIL-T-713	LACING, TAPE, TYPE P, CLASS 2, BLACK (FS-2732 NO. 18)
	24	1	1900998-006	ZIPPER TUBING, ND1002155, TYPE 1, PLASTIC, FLEXIBLE 1.125 IN. DIA X 13 FT. 0 IN. TOT. LG.
	25	2	1900998-007	ZIPPER TUBING, ND1002155, TYPE 1, PLASTIC, FLEXIBLE 1.0 IN. DIA X 6 FT. 0 IN. TOTAL LG.
10	26	1	1016184-002	TRANSITION, HARNESS, 3 FINGER, HEAT SHRINK
20	27			CONNECTOR CONTACT, SOCKET
21	28			CONNECTOR CONTACT, PIN
10	29	4	1010490-188	INSULATION, SLEEVING, ELECT.
22	30	AR	1897147-106,-108,-112	CABLE CLAMP SLEEVE
10	31	1	1016282- 24	RUBBER GROMMET
10	32	1	1016282- 22	RUBBER GROMMET

MANNED SPACECRAFT CENTER HOUSTON, TEXAS | SIZE A | 1900998
SCALE-NONE | REV LTR F | SHEET 6 OF 22

PENNANT LIST OF MATERIALS

NOTE	ITEM	QTY	PART NO	DESCRIPTION
10	33	1	1015902- 46	TERMINAL LUG
	34	3	1900958-008	TUBING, MODIFIED POLYVINYL CHLORIDE, FLEXIBLE SHRINK-FIT PER 1016197-006 6 INCH ~~TOTAL LENGTH~~
	35	2	MS24055-2	CONNECTOR
	36	2	MS24018-1	CONNECTOR HOOD

MANNED SPACECRAFT CENTER HOUSTON, TEXAS | SIZE A | 1900998
SCALE-NONE | REV LTR F | SHEET 7 OF 22

CONDUCTOR NUMBER	INDIVIDUAL LENGTH ITEM NO	FROM CUT WIRE OR SHIELD STRIP WIRE OR JACKET CIRCUIT POINT	FROM TERMINATION SPEC ITEM NO	TO CUT WIRE OR SHIELD STRIP WIRE OR JACKET CIRCUIT POINT	TO TERMINATION SPEC ITEM NO
A 1	1	PA- 1	25N 33	P3- 91	22N 22
A 2		DELETED			
		DELETED			
A 2A		DELETED			
A 2L		DELETED			
A 2R		DELETED			
A 3		DELETED			
		DELETED			
A 3A		DELETED			
A 3W		DELETED			
A 4	2		23C 20C 9 10 5 A 16		23C 20C A 17 7A
A 4A	1	SHLD A4	37N	E1	37N
A 4W		P1-E	22N 27	P3- 54	22N 22
A 5	1	P1-F	22N 27	P3- 26	22N 22
A 6	1	P1-G	22N 27	P3- 63	22N 22
A 7	3		23C 20C 11 12 5 A 16		23C 20C A 16 7A

1/ THE STD CONDUCTOR TERMINATION FIGURES ARE PER
2/ DIMENSIONS ARE IN INCHES AND TWO PLACE DECIMALS.

MANNED SPACECRAFT CENTER HOUSTON, TEXAS | SIZE A | 1900998
SCALE-NONE | REV LTR F | SHEET 8 OF 22

CONDUCTOR NUMBER	INDIVIDUAL LENGTH ITEM NO	FROM CUT WIRE OR SHIELD STRIP WIRE OR JACKET CIRCUIT POINT	FROM TERMINATION SPEC ITEM NO	TO CUT WIRE OR SHIELD STRIP WIRE OR JACKET CIRCUIT POINT	TO TERMINATION SPEC ITEM NO
A 7A	1	SHLD A7	37N	E1	37N
A 7L		P1-J	22N 27	P3- 12	22N 22
A 7R		P1-H	22N 27	P3- 11	22N 22
A 8	5		A 26		A 26
A 8L		P1-L	22N 27	P3- 40	22N 22
A 8R		P1-K	22N 27	P3- 41	22N 22
A 9	1	P1-N	22N 27	P3- 43	22N 22
A 10	1	P1-P	22N 27	P3- 71	22N 22
A 11	3		23C 20C 11 12 5 A 16		23C 20C A 16 7A
A 11A	1	SHLD A11	37N	E1	37N
A 11L		P1-S	22N 27	P3- 53	22N 22
A 11R		DELETED			
A 12	3		23C 20C 11 12 5 A 16		23C 20C A 16 7A
A 12A	1	SHLD A12	37N	E1	37N
A 12L		P1-U	22N 27	P3- 52	22N 22
A 12R		DELETED			

1/ THE STD CONDUCTOR TERMINATION FIGURES ARE PER
2/ DIMENSIONS ARE IN INCHES AND TWO PLACE DECIMALS.

MANNED SPACECRAFT CENTER HOUSTON, TEXAS | SIZE A | 1900998
SCALE-NONE | REV LTR F | SHEET 9 OF 22

GJK CABLE W-58 F 1900998

CONDUCTOR INDIVIDUAL LENGTH NUMBER	ITEM NO.	FROM CUT WIRE OR SHIELD STRIP WIRE OR JACKET CIRCUIT POINT	FROM ITEM NO	TO CUT WIRE OR SHIELD STRIP WIRE OR JACKET CIRCUIT POINT	TO ITEM NO
A 13	1	P1-V	22N 27	P3- 1	22N 22
A 14	1	P1-W	22N 27	P3- 60	22N 22
A 15	1	P1-X	22N 27	P3- 2	22N 22
A 16	1	P1-Y	22N 27	P3- 96	22N 22
A 17	1	P1-Z	22N 27	P3- 95	22N 22
A 18	1	P1-A*	22N 27	E4	37N
A 19	1	P1-B*	22N 27	P3- 93	22N 22
A 20	1	P1-C*	22N 27	P3- 51	22N 22
A 21	1	P1-D*	22N 27	P3-106	22N 22
A 22	1	P1-E*	22N 27	P3- 77	22N 22
A 23	1	P1-F*	22N 27	P3- 65	22N 22
A 24	2		280 250 9 10 5 A 16		280 250 A 17 7A
A 24A	1	SHLD A24	37N	E2	37N
A 24W		P1-G*	22N 27	P3- 85	22N 22
A 25	2		280 250 9 10 A 16		280 250 A 17 7A
A 25A	1	SHLD A25	37N	E2	37N

1> THE STD CONDUCTOR TERMINATION FIGURES ARE PER
2> DIMENSIONS ARE IN INCHES AND TWO PLACE DECIMALS.

MANNED SPACECRAFT CENTER HOUSTON, TEXAS | SIZE A | 1900998
SCALE - NONE | REV LTR F | SHEET 10 OF 22

GJK CABLE W-58 F 1900998

CONDUCTOR INDIVIDUAL LENGTH NUMBER	ITEM NO	FROM CUT WIRE OR SHIELD STRIP WIRE OR JACKET CIRCUIT POINT	FROM ITEM NO	TO CUT WIRE OR SHIELD STRIP WIRE OR JACKET CIRCUIT POINT	TO ITEM NO
A 25W		P1-H*	22N 27	P3- 98	22N 22
A 26	1	P1-I*	22N 27	P3- 42	22N 22
A 27	5		A 29		A 29
A 27L		P1-K*	22N 27	P3- 69	22N 22
A 27R		P1-J*	22N 27	P3- 80	22N 22
A 28	2		280 250 9 10 5 A 16		280 250 A 17 7A
A 28A	1	SHLD A28	37N	E2	37N
A 28W		P1-M*	22N 27	P3- 92	22N 22
A 29	2		280 250 9 10 5 A 16		280 250 A 17 7A
A 29A	1	SHLD A29	37N	E2	37N
A 29W		P1-N*	22N 27	P3- 74	22N 22
A 30	2		280 250 9 10 5 A 16		280 250 A 17 7A
A 30A	1	SHLD A30	37N	E2	37N
A 30W		P1-P*	22N 27	P3- 90	22N 22
A 31	2		280 250 9 10 5		280 250 A 17 7A

1> THE STD CONDUCTOR TERMINATION FIGURES ARE PER
2> DIMENSIONS ARE IN INCHES AND TWO PLACE DECIMALS.

MANNED SPACECRAFT CENTER HOUSTON, TEXAS | SIZE A | 1900998
SCALE - NONE | REV LTR F | SHEET 11 OF 22

GJK CABLE W-58 G 1900998

CONDUCTOR INDIVIDUAL LENGTH NUMBER	ITEM NO	FROM CUT WIRE OR SHIELD STRIP WIRE OR JACKET CIRCUIT POINT	FROM ITEM NO	TO CUT WIRE OR SHIELD STRIP WIRE OR JACKET CIRCUIT POINT	TO ITEM NO
			A 14		
A 31A	1	SHLD A31	37N	E2	37N
A 31W		P1-U*	22N 27	P3-100	22N 22
A 32	2		330 300 9 10 5 A 16		330 300 A 17 7A
A 32A	1	SHLD A32	37N	P1-S*	22N 27
A 32L		DELETED			
A 32W		P1-R*	22N 27	P3- 56	22N 22
A 33	2		330 300 9 10 5 A 16		330 300 A 17 7A
A 33A	1	SHLD A33	37N	P1-U*	22N 27
A 33W		P1-T*	22N 27	P3- 48	22N 22
A 34		P1-V*	22N 27	P3- 36	22N 22
A 35		P1-W*	22N 27	P3- 94	22N 22
A 36	4		330 300 13 14 A 15		330 300 A 15 7A
A 36A	1	SHLD A36	37N	E3	37N
A 36L		P1-Y*	22N 27	P3- 17	22N 22

1> THE STD CONDUCTOR TERMINATION FIGURES ARE PER
2> DIMENSIONS ARE IN INCHES AND TWO PLACE DECIMALS.

MANNED SPACECRAFT CENTER HOUSTON, TEXAS | SIZE A | 1900998
SCALE - NONE | REV LTR | SHEET 12 OF 22

GJK CABLE W-58 F 1900998

CONDUCTOR INDIVIDUAL LENGTH NUMBER	ITEM NO	FROM CUT WIRE OR SHIELD STRIP WIRE OR JACKET CIRCUIT POINT	FROM ITEM NO	TO CUT WIRE OR SHIELD STRIP WIRE OR JACKET CIRCUIT POINT	TO ITEM NO
A 36L		P1-Y*	22N 27	P3- 17	22N 22
A 36R		P1-X*	22N 27	P3- 3	22N 22
A 36Y		P1-Z*	22N 27	P3- 16	22N 22
A 37	3		330 300 13 12 A 16		330 300 A 16 7A
A 37A	1	SHLD A37	37N	E3	37N
A 37L		P1-BB	22N 27	P3- 27	22N 22
A 37R		P1-AA	22N 27	P3- 13	22N 22
A 38	4		330 300 13 14 A 15		330 300 A 15 7A
A 38A	1	SHLD A38	37N	E3	37N
A 38L		P1-DD	22N 27	P3- 6	22N 22
A 38Z		P1-CC	22N 27	P3- 20	22N 22
A 38Y		P1-EE	22N 27	P3- 7	22N 22
A 39	4		330 300 13 14 A 15		330 300 A 15 7A
A 39A	1	SHLD A39	37N	E3	37N
A 39L		P1-GG	22N 27	P3- 5	22N 22

1> THE STD CONDUCTOR TERMINATION FIGURES ARE PER
2> DIMENSIONS ARE IN INCHES AND TWO PLACE DECIMALS.

MANNED SPACECRAFT CENTER HOUSTON, TEXAS | SIZE A | 1900998
SCALE - NONE | REV LTR F | SHEET 13 OF 22

GJK CABLE W-58 F 1900998

CONDUCTOR NUMBER	INDIVIDUAL LENGTH ITEM NO	FROM CIRCUIT POINT	CUT WIRE OR SHIELD STRIP WIRE OR JACKET	TERMINATION SPEC	ITEM NO	TO CIRCUIT POINT	CUT WIRE OR SHIELD STRIP WIRE OR JACKET	TERMINATION SPEC	ITEM NO
A 39R		P1-FF	22N	27		P3- 4	22N	22	
A 39Y		P1-HH	22N	27		P3- 18	22N	22	
A 40	2		23O 200	9 10	5		23O 200	A 17	7A
				A 16					
A 40A	1	SHLD A40	37N			E5	37N		
A 40W		P2-A	22N	28		P3- 39	22N	22	
A 41	2		23O 200	9 10	5		23O 200	A 17	7A
				A 16					
A 41A	1	SHLD A41	37N			E5	37N		
A 41W		P2-B	22N	28		P3- 73	22N	22	
A 42	2		23O 200	9 10	5		23O 200	A 17	7A
				A 16					
A 42A	1	SHLD A42	37N			E5	37N		
A 42W		P2-C	22N	28		P3- 10	22N	22	
A 43	3		23O 200	11 12	5		23O 200	A 16	7A
				A 16					
A 43A	1	SHLD A43	37N			E5	37N		
A 43L		P2-E	22N	28		P3- 23	22N	22	

1/ THE STD CONDUCTOR TERMINATION FIGURES ARE PER
2/ DIMENSIONS ARE IN INCHES AND TWO PLACE DECIMALS

MANNED SPACECRAFT CENTER HOUSTON TEXAS | SIZE A | 1900998
SCALE-NONE | REV LTR F | SHEET 14 OF 22

GJK CABLE W-58 F 1900998

CONDUCTOR NUMBER	INDIVIDUAL LENGTH ITEM NO	FROM CIRCUIT POINT	CUT WIRE OR SHIELD STRIP WIRE OR JACKET	TERMINATION SPEC	ITEM NO	TO CIRCUIT POINT	CUT WIRE OR SHIELD STRIP WIRE OR JACKET	TERMINATION SPEC	ITEM NO
A 43R		P2-D	22N	28		P3- 24	22N	22	
A 44	3		23O 200	11 12	5		23O 200	A 16	7A
				A 16					
A 44A	1	SHLD A44	37N			E5	37N		
A 44L		P2-G	22N	28		P3- 34	22N	22	
A 44R		P2-F	22N	28		P3- 35	22N	22	
A 45	3		23O 200	11 12	5		23O 200	A 16	7A
				A 16					
A 45A	1	SHLD A45	37N			E5	37N		
A 45L		P2-J	22N	28		P3- 33	22N	22	
A 45R		P2-H	22N	28		P3- 19	22N	22	
A 46	1	P2-K	22N	28		P3- 99	22N	22	
A 47		DELETED							
		DELETED							
A 47A		DELETED							
A 47L		DELETED							
A 47R		DELETED							
A 8		DELETED							

1/ THE STD CONDUCTOR TERMINATION FIGURES ARE PER
2/ DIMENSIONS ARE IN INCHES AND TWO PLACE DECIMALS.

MANNED SPACECRAFT CENTER HOUSTON, TEXAS | SIZE A | 1900998
SCALE-NONE | REV LTR F | SHEET 15 OF 22

GJK CABLE W-58 F 1900998

CONDUCTOR NUMBER	INDIVIDUAL LENGTH ITEM NO	FROM CIRCUIT POINT	CUT WIRE OR SHIELD STRIP WIRE OR JACKET	TERMINATION SPEC	ITEM NO	TO CIRCUIT POINT	CUT WIRE OR SHIELD STRIP WIRE OR JACKET	TERMINATION SPEC	ITEM NO
		DELETED							
A 48A		DELETED							
A 48W		DELETED							
A 49	1	P2-R	22N	28		P3- 14	22N	22	
A 50	1	P2-S	22N	28		P3- 50	22N	22	
A 51	1	P2-T	22N	28		P3- 21	22N	22	
A 52	1	P2-U	22N	28		P3- 70	22N	22	
A 53	2		28O 25O	9 10	5		28O 25O	A 17	7A
				A 16					
A 53A	1	SHLD A53	37N			E6	37N		
A 53W		P2-V	22N	28		P3- 82	22N	22	
A 54	1	P2-W	22N	28		P3- 58	22N	22	
A 55	1	P2-X	22N	28		P3- 59	22N	22	
A 56	1	P2-Y	22N	28		P3- 66	22N	22	
A 57	1	P2-Z	22N	28		P3- 78	22N	22	
A 58	1	P2-A*	22N	28		E9	37N		
A 59	1	P2-B*	22N	28		P3- 81	22N	22	
A 60	1	P2-C*	22N	28		P3- 79	22N	22	

1/ THE STD CONDUCTOR TERMINATION FIGURES ARE PER
2/ DIMENSIONS ARE IN INCHES AND TWO PLACE DECIMALS.

MANNED SPACECRAFT CENTER HOUSTON TEXAS | SIZE A | 1900998
SCALE-NONE | REV LTR F | SHEET 16 OF 22

GJK CABLE W-58 F 1900998

CONDUCTOR NUMBER	INDIVIDUAL LENGTH ITEM NO	FROM CIRCUIT POINT	CUT WIRE OR SHIELD STRIP WIRE OR JACKET	TERMINATION SPEC	ITEM NO	TO CIRCUIT POINT	CUT WIRE OR SHIELD STRIP WIRE OR JACKET	TERMINATION SPEC	ITEM NO
A 61	1	P2-D*	22N	28		P3- 68	22N	22	
A 62	1	P2-E*	22N	28		P3- 67	22N	22	
A 63	2		28O 25O	9 10	5		28O 25O	A 17	7A
				A 16					
A 63A	1	SHLD A6*	37N			F6	37N		
A 63W		P2-F*	22N	28		P3- 89	22N	22	
A 64	2		28O 25O	9 10	5		28O 25O	A 17	7A
				A 16					
A 64A	1	SHLD A64	37N			E6	37N		
A 64W		P2-G*	22N	28		P3-104	22N	22	
A 65	2		28O 25O	9 10	5		28O 25O	A 17	7A
				A 16					
A 65A	1	SHLD A65	37N			E6	37N		
A 65W		P2-H*	22N	28		P3- 97	22N	22	
A 66	2		33O 30O	9 10	5		33O 30O	A 17	7A
				A 16					
A 66A	1	SHLD A66	37N			E7	37N		
A 66W		P2-J*	22N	28		P3- 86	22N	22	

1/ THE STD CONDUCTOR TERMINATION FIGURES ARE PER
2/ DIMENSIONS ARE IN INCHES AND TWO PLACE DECIMALS.

MANNED SPACECRAFT CENTER HOUSTON, TEXAS | SIZE A | 1900998
SCALE-NONE | REV LTR F | SHEET 17 OF 22

GJK CABLE W-58 F 1900998

CONDUCTOR INDIVIDUAL LENGTH NUMBER	ITEM NO	FROM CUT WIRE OR SHIELD STRIP WIRE OR JACKET CIRCUIT POINT				TERMINATION SPEC	ITEM NO	NO.	TO CUT WIRE OR SHIELD STRIP WIRE OR JACKET CIRCUIT POINT				TERMINATION SPEC	ITEM NO	NO
A 67	2		330	300	9	10	5			330	300	A	17	7A	
					A	16									
A 67A	1	SHLD A67	37N						E7	37N					
A 67W		P2-K*	22N		28				P3-102	22N		22			
A 68	1	P2-M*	22N		28				P3- 37	22N		22			
A 69	1	P2-N*	22N		28				P3- 30	22N		22			
A 70	1	P2-P*	22N		28				P3- 31	22N		22			
A 71	1	P2-R*	22N		28				P3- 55	22N		22			
A 72	1	P2-S*	22N		28				P3- 46	22N		22			
A 72	2		330	300	9	10	5			330	300	A	17	7A	
					A	16									
A 72A	1	SHLD A72	37N						E7	37N					
A 72W		P2-T*	22N		28				P3- 88	22N		22			
A 73	2		330	300	9	10	5			330	300	A	17	7A	
					A	16									
A 73A	1	SHLD A73	37N						E7	37N					
A 73W		P2-U*	22N		28				P3- 87	22N		22			
A 74	2		330	300	9	10	5			330	300	A	17	7A	

1> THE STD CONDUCTOR TERMINATION FIGURES ARE PER
2> DIMENSIONS ARE IN INCHES AND TWO PLACE DECIMALS.

MANNED SPACECRAFT CENTER HOUSTON, TEXAS | SIZE A | 1900998
SCALE - NONE | REV LTR F | SHEET 18 OF 22

GJK F 1900998

CONDUCTOR INDIVIDUAL LENGTH NUMBER	ITEM NO	FROM CUT WIRE OR SHIELD STRIP WIRE OR JACKET CIRCUIT POINT				TERMINATION SPEC	ITEM NO	NO.	TO CUT WIRE OR SHIELD STRIP WIRE OR JACKET CIRCUIT POINT				TERMINATION SPEC	ITEM NO	NO
					A	16									
A 74A	1	SHLD A74	37N						E7	37N					
A 74W		P2-V*	22N		28				P3-101	22N		22			
A 75	2		330	300	9	10	5			330	300	A	17	7A	
					A	16									
A 75A	1	SHLD A75	37N						E7	37N					
A 75W		P2-K*	22N		28				P3- 76	22N		22			
A 76	2		380	350	9	10	5			380	350	A	17	7A	
					A	16									
A 76A	1	SHLD A76	37N						E8	37N					
A 76W		P2-X*	22N		28				P3- 75	22N		22			
A 77	2		380	350	9	10	5			380	350	A	17	7A	
					A	16									
A 77A	1	SHLD A77	37N						E8	37N					
A 77W		P2-Y*	22N		28				P3-105	22N		22			
A 78	2		380	350	9	10	5			380	350	A	17	7A	
					A	16									
A 78A	1	SHLD A78	37N						E8	37N					

1> THE STD CONDUCTOR TERMINATION FIGURES ARE PER
2> DIMENSIONS ARE IN INCHES AND TWO PLACE DECIMALS.

MANNED SPACECRAFT CENTER HOUSTON, TEXAS | SIZE A | 1900998
SCALE - NONE | REV LTR F | SHEET 19 OF 22

GJK CABLE W-58 F 1900998

CONDUCTOR INDIVIDUAL LENGTH NUMBER	ITEM NO	FROM CUT WIRE OR SHIELD STRIP WIRE OR JACKET CIRCUIT POINT				TERMINATION SPEC	ITEM NO	NO.	TO CUT WIRE OR SHIELD STRIP WIRE OR JACKET CIRCUIT POINT				TERMINATION SPEC	ITEM NO	NO
A 78W		P2-AA	22N		28				P3- 49	22N		22			
A 79	2		380	350	9	10	5			380	350	A	17	7A	
					A	16									
A 79A	1	SHLD A79	37N						E8	37N					
A 79W		P2-BB	22N		28				P3- 38	22N		22			
A 80	1	P2-CC	22N		28				P3- 72	22N		22			
A 81	1	P2-DD	22N		28				P3- 25	22N		22			
A 82	1	E1	37N						E4	37N					
A 83	1	E2	37N						E4	37N					
A 84	1	E3	37N						E4	37N					
A 85	1	E5	37N						E9	37N					
A 86	1	E6	37N						E9	37N					
A 87	1	E7	37N						E9	37N					
A 88	1	E8	37N						E9	37N					
A 89	2		380	350	9	10	5			380	350	A	17	7A	
					A	16									
A 89A	1	SHLD A89	37N						E8	37N					
A 89W		P2-I*	22N		28				P3-103	22N		22			

1> THE STD CONDUCTOR TERMINATION FIGURES ARE PER
2> DIMENSIONS ARE IN INCHES AND TWO PLACE DECIMALS.

MANNED SPACECRAFT CENTER HOUSTON, TEXAS | SIZE A | 1900998
SCALE - NONE | REV LTR F | SHEET 20 OF 22

GJK CABLE W-58 G 1900998

CONDUCTOR INDIVIDUAL LENGTH NUMBER	ITEM NO	FROM CUT WIRE OR SHIELD STRIP WIRE OR JACKET CIRCUIT POINT				TERMINATION SPEC	ITEM NO	NO.	TO CUT WIRE OR SHIELD STRIP WIRE OR JACKET CIRCUIT POINT				TERMINATION SPEC	ITEM NO	NO
A 91	1	P5-C	25Y						P3-62	10N		22			
A 92	1	P5-R	25Y						P3-29	10N		22			
A 93	1	P6-B	25Y						P3-63	10N		22			
A 94	1	P6-C	25Y						P3-64	10N		22			
A 95	1	P6-D	25Y						P3-84	10N		22			
A 96	1	P6-E	25Y						P3-32	10N		22			
A 97	1	P6-F	25Y						P3-44	10N		22			
A 98	1	P1-M	22N		27				P3-47	22N		22			

1> THE STD CONDUCTOR TERMINATION FIGURES ARE PER
2> DIMENSIONS ARE IN INCHES AND TWO PLACE DECIMALS.

MANNED SPACECRAFT CENTER HOUSTON, TEXAS | SIZE A | 1900998
SCALE - NONE | REV LTR G | SHEET 21 OF 22

REVISIONS				
SYM	ZONE	DESCRIPTION	DATE	APPD.
		SEE SHEET 1 FOR REVISION RECORD — CHG NO.		

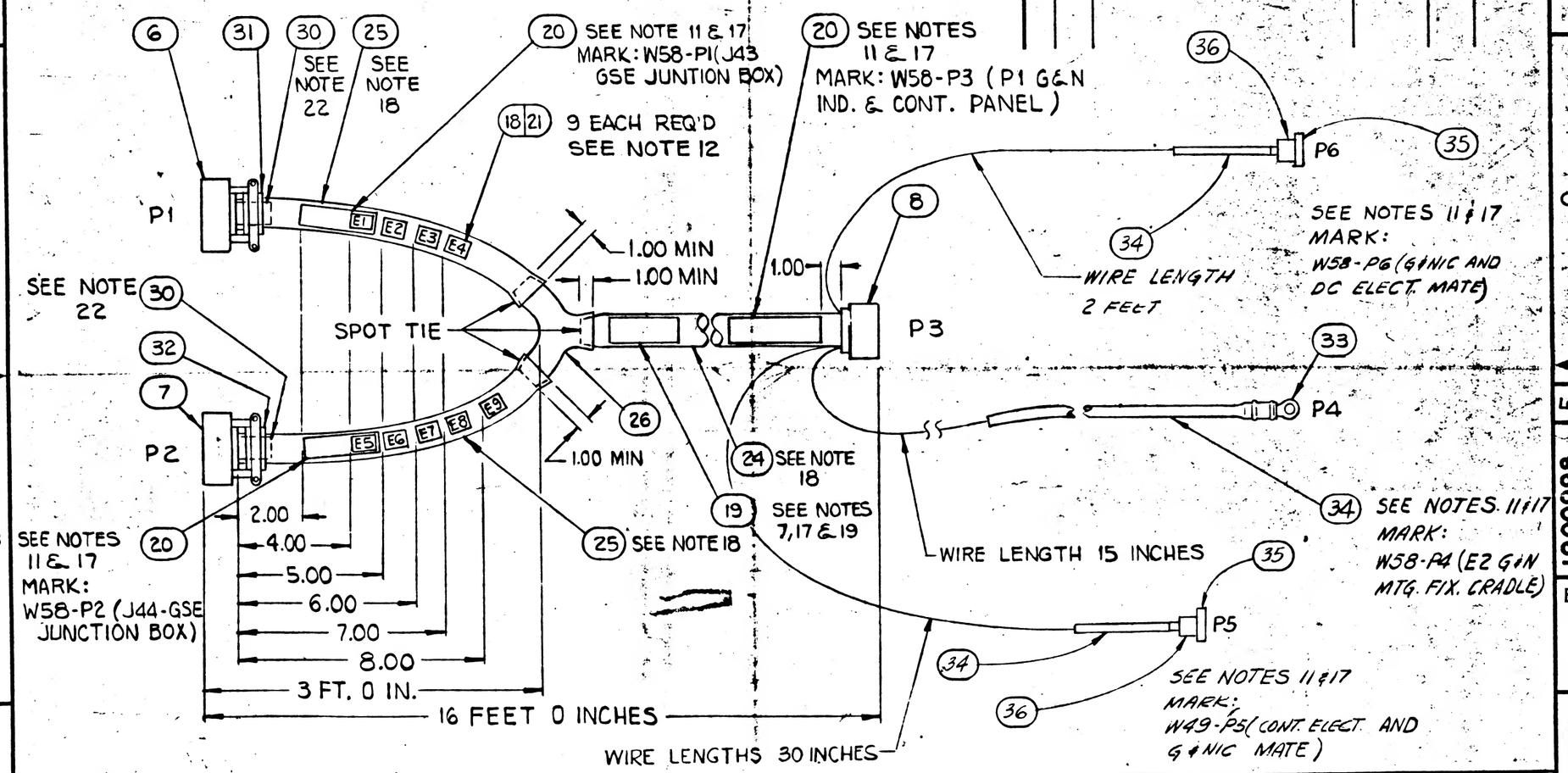

LOCATION TOLERANCE (EXCEPT LENGTH): +.50 -.50

NEXT ASSY	USED ON
APPLICATION	

UNLESS OTHERWISE SPECIFIED DIMENSIONS ARE IN INCHES TOLERANCES ON FRACTIONS ± — DECIMALS ± — ANGLES ± —

DO NOT SCALE THIS DRAWING

MATERIAL

CONTRACT NAS 9-497

AC SPARK PLUG DIVISION, GMC
MILWAUKEE, WISCONSIN

ACSP PN

DRAWN WEISSERT DATE 11-NOV-63
CHECKED M. MANNING 25-NOV-63
APPROVAL N. ABRAHAM 25-NOV-63
APPROVAL

NASA APPROVAL

MIT APPROVAL

MANNED SPACECRAFT CENTER
HOUSTON, TEXAS

CABLE, INTERCONNECT W58 ISS, OSS TESTING

CODE IDENT NO. | SIZE C | 1900998

SCALE NONE | SHEET 22 OF 22

MIL 1077C-P

1900998

PENNANT NOTE	GENERAL NOTES
1	SEE CONDUCTOR CHART, PENNANT NOTE 1.
2	SEE CONDUCTOR CHART, PENNANT NOTE 2.
3	INTERPRET DRAWING IN ACCORDANCE WITH STANDARDS PRESCRIBED BY MIL-D-70327.
4	MARK CONDUCTOR IDENTIFICATION ON SINGLE CONDUCTORS PER ND1002019 OMITTING ALL SUFFIX LETTERS EXCEPT A AND B.
5	SPACING OF CONDUCTOR IDENTIFICATION SHALL BE EVERY 15 INCHES MAX. AND AT EACH TERMINATION.
6	SPIRALLING OF THE MARKING IS ALLOWED.
7	IDENTIFY USING DRAWING NO. AND REVISION LETTER PER MIL-STD-130 (ES-267). .12 INCH HIGH CHARACTERS WHITE.
8	Y OR N IN TINNED COLUMN INDICATES YES OR NO.
9	A LETTER WITH AN ASTERISK SUFFIX, INDICATES A LOWER CASE LETTER.
10	VENDOR ITEM - SEE SPECIFICATION CONTROL DRAWING.
11	MARK IDENTIFICATION BAND WITH REFERENCE DESIGNATION AS NOTED .12 INCH HIGH COLOR WHITE, HOT IMPRESSION STAMPING PER ND1002019. CENTRALIZE.
12	MARK SLEEVING WITH REFERENCE DESIGNATIONS AS SHOWN .12 INCH HIGH, COLOR BLACK PER ND1002019.
13	MARK SLEEVING OF MULTI-CONDUCTORS WITH THE CONDUCTOR NUMBER .12 INCH HIGH, COLOR BLACK, PER ND1002019 WHEN SLEEVING ITEM NUMBERS FOLLOW AN A OR T IN THE ACCESSORIES ITEM NUMBER FIELD.

PENNANT NOTE	GENERAL NOTES
14	A OR T PREFIX IN THE ACCESSORIES ITEM NUMBER COLUMN INDICATES THE READING POSITION AWAY FROM TERMINATION OR TOWARD TERMINATION RESPECTIVELY, OF THE WIRE MARKER SLEEVE.
15	THE SUFFIX LETTER OF A CONDUCTOR IDENTIFICATION NUMBER INDICATES CONDUCTOR SHIELDING, COLOR, OR MARKING. A - FROM END SHIELD L - WHITE WITH BLUE TRACER OR WHITE WITH LETTER L. R - WHITE WITH RED TRACER OR WHITE WITH LETTER R. Y - WHITE WITH YELLOW TRACER
16	ASSEMBLE CONTACTS IN ALL CONNECTOR GROMMET HOLES.
17	SECURE TO CABLE USING ITEM 22, MARKING TO READ AWAY FROM CONNECTOR.
18	SEAL ZIPPER TUBING PER ND1002153
19	SERIALIZE PER ND1002023
20	ITEM 27 FURNISHED WITH ITEM 6
21	ITEM 28 FURNISHED WITH ITEM 7
22	ITEM 30 SHALL BE SHORTENED WHEN NECESSARY TO AVOID INTERFERENCE WITH FERRULES AND MAY BE CUT LENGTHWISE ON ONE SIDE. SELECT ONE OR MORE OF ITEM 30 AS REQUIRED TO FIT.

PENNANT NOTE	GENERAL NOTES

TOLERANCE CHART, UNLESS OTHERWISE SPECIFIED ---

APPLICABLE LENGTH FOR WIRE OR CABLE, STRIP WIRE, STRIP JACKET, CUT WIRE OR CUT SHIELD.	TOLERANCE: WIRE OR CABLE	STRIP: WIRE	STRIP: JACKET	CUT: WIRE	CUT: SHIELD
UNDER 1 INCH	+ .06-.00	+.03-.00	+.06-.06	+.06-.06	+.06-.06
1 INCH TO 6 INCHES	+ .50-.00	+.06-.00	+.25-.25	+.25-.25	+.25-.25
6 INCHES TO 6 FEET	+1.00-.00		+.50-.50	+.50-.50	+.50-.50
OVER 6 FEET	+2.00-.00				

APPLICATION

NEXT ASSY	USED ON
1901300	900005-011

REVISIONS

SYM	DESCRIPTION	DATE	APPROVAL
A	CHANGE IN ACCORDANCE WITH CM193777 TDR 10029	4 FEB 64	GG
B	CHANGE IN ACCORDANCE WITH CM195032	3 MAR 64	JJJ
C	CHANGE IN ACCORDANCE WITH CM 200712	2 APR 64	
	REVISED CUSOMER DATA (V2-64)		
D	CHANGE IN ACCORDANCE WITH CM 196300 TDR 10230	27 MAY 64	R.B. CP
E	CHANGE IN ACCORDANCE WITH CM197538 TDR 10688 REVISED CUSTOMER DATA (V2-64)	5 JUNE 64	R.B.
F	CHANGE IN ACCORDANCE WITH CM 197761 TDR TDR 11263	15 JUNE 64	MK AU
G	CHANGE IN ACCORDANCE WITH CM 198198 TDR 11261	18 JUN 64	JWP
H	CHANGE IN ACCORDANCE WITH CM 199023 TDR 12246	30 JUL 64	JWP

FOR INFORMATION ONLY

CLASS B RELEASE TDR No. 05653 DATE 1/7/64

REV	H	F	F	F	G	H	F	F	F	G	F	F	F	F	F	F	G	H
SHEET	1	2	3	4	5	6	7	8	9	10	11	12	13	14	15	16	17	18	19	20	21	22
REV STATUS	REV																					
OF SHEETS	SHEET																					

AC SPARK PLUG DIVISION, GMC
MILWAUKEE, WISCONSIN

ACSP PN

DRAWN WEISSERT 11-NOV-63
CHECKED 11-NOV-63
APPROVAL 11-NOV-63
APPROVAL

MANNED SPACECRAFT CENTER HOUSTON, TEXAS

CABLE, INTERCONNECT W58
ISS, OSS TESTING

CODE IDENT NO. | SIZE A | 1900998 | REV H

NASA APPROVAL
MIT APPROVAL
CONTRACT | SCALE | SHEET 1 OF 22

INCHES

PENNANT LIST OF MATERIALS

NOTE	ITEM	QTY	PART NO	DESCRIPTION
10	33	1	1015902- 46	TERMINAL LUG
	34	3	1900998-008	TUBING, MODIFIED POLYVINYL CHLORIDE, FLEXIBLE SHRINK-FIT PER 1016197-006 6 INCH ~~TOTAL LENGTH~~
	35	2	MS24055-2	CONNECTOR
	36	2	MS24018-1	CONNECTOR HOOD
	37	2	1900998-009	TUBING, MODIFIED POLYVINYL CHLORIDE, FLEXIBLE SHRINK-FIT PER 1016197-005 2 FEET

C

MANNED SPACECRAFT CENTER HOUSTON, TEXAS	SIZE A	1900998
SCALE-NONE	REV LTR R H	SHEET 7 OF 22

MIL 2084 4-63

CONDUCTOR INDIVIDUAL LENGTH NUMBER	ITEM NO. [3]		FROM CUT WIRE OR SHIELD STRIP WIRE OR JACKET CIRCUIT POINT [2]	TYPE [2]	TERMINATION SPEC. [1] ITEM NO.	NO.	TO CUT WIRE OR SHIELD STRIP WIRE OR JACKET CIRCUIT POINT [2]	TYPE [2]	TERMINATION SPEC [1] ITEM NO.	NO.
A 1	1		P4- 1	25N	33		P3- 91	22N	22	
A 2			DELETED							
			DELETED							
A 2A			DELETED							
A 2L			DELETED							
A 2R			DELETED							
A 3			DELETED							
			DELETED							
A 3A			DELETED							
A 3W			DELETED							
A 4	2			230 200	9 10	5		230 200	A 17	7A
					A 16					
A 4A	1		SHLD A4	37N			E1	37N		
A 4W			P1-E	22N	27		P3- 54	22N	22	
A 5	1		P1-F	22N	27		P3- 26	22N	22	
A 6	1		P1-G	22N	27		P3- 83	22N	22	
A 7	3			230 200	11 12	5		230 200	A 16	7A
					A 16					

[1] THE STD CONDUCTOR TERMINATION FIGURES ARE PER
[2] DIMENSIONS ARE IN INCHES AND TWO PLACE DECIMALS.

MANNED SPACECRAFT CENTER HOUSTON, TEXAS	SIZE A	1900998
SCALE-NONE	REV LTR F	SHEET 8 OF 22

MIL 2085 - 4-63 WIR

PENNANT LIST OF MATERIALS

NOTE	ITEM	QTY	PART NO	DESCRIPTION
	1	1	1900998-001	WIRE ND1002181, TYPE 1, CLASS 1, WHT, NO. 22AWG 770 FT., 0 IN. TOTAL LENGTH.
	2	1	1900998-002	WIRE ND1002181, TYPE 1, CLASS 4, WHT JKT NO. 22AWG, WHT, 432 FT. 0 IN. TOTAL LENGTH.
	3	1	1900998-003	WIRE ND1002181, TYPE 2, CLASS 4, WHT JKT, NO. 22AWG WHT/BLU, WHT/RED, 112 FT. 0 IN. TOTAL LG.
	4	1	1900998-004	WIRE ND1002181, TYPE 3, CLASS 4, WHT. JKT, NO. 22AWG WHT/BLU, WHT/RED, WHT/YEL 50 FT. 0 IN. TOTAL LENGTH
	5	1	1900998-005	WIRE ND1002181, TYPE 2, CLASS 1, T2, 22AWG WHT WITH LETTER L, WHT WITH LETTER R 35 FT. 0 IN. TOTAL LENGTH.
16	6	1	MS3126F-24-61SX (1897048-612)	CONNECTOR
16	7	1	MS3126F-22-55PW (1897045-551)	CONNECTOR
10	8	1	1010411- 1	CONNECTOR
10	9	23	1000243- 3	FERRULE, ELECT. COND.
10	10	23	1000242- 2	FERRULE, ELECT. COND.
10	11	6	1000243- 8	FERRULE, ELECT. COND.
10	12	6	1000242- 7	FERRULE, ELECT. COND.
10	13	3	1000243- 11	FERRULE, ELECT. COND.
10	14	3	1000242- 11	FERRULE, ELECT. COND.
10	15	6	1010490-196	INSULATION, SLEEVING, ELECT.

MANNED SPACECRAFT CENTER HOUSTON, TEXAS	SIZE A	1900998
SCALE-NONE	REV LTR G	SHEET 5 OF 22

MIL 2084 4-63

PENNANT LIST OF MATERIALS

NOTE	ITEM	QTY	PART NO	DESCRIPTION
10	16	43	1010490-198	INSULATION, SLEEVING, ELECT.
10	17	25	1010490-200	INSULATION, SLEEVING, ELECT.
10	18	9	1010490-258	INSULATION, SLEEVING, ELECT.
10	19	1	1016128-011	BAND, IDENTIFICATION
10	20	3	1016128-041	BAND, IDENTIFICATION
10	21	9	1016006-002	SPLICE REDUCER
10	22	108	1010464- 2	CONNECTOR, CONTACT, PIN
	23	AR	MIL-T-713	LACING, TAPE, TYPE P, CLASS 2, BLACK (ES-2732 NO. 18)
	24	1	1900998-006	ZIPPER TUBING, ND1002155, TYPE 1, PLASTIC, FLEXIBLE 1.125 IN. DIA X 13 FT. 0 IN. TOT. LG.
	25	2	1900998-007	ZIPPER TUBING, ND1002155, TYPE 1, PLASTIC, FLEXIBLE 1.0 IN. DIA X 6 FT. 0 IN. TOTAL LG.
10	26	1	1016184-002	TRANSITION, HARNESS, 3 FINGER, HEAT SHRINK
20	27			CONNECTOR CONTACT, SOCKET
21	28			CONNECTOR CONTACT, PIN
10	29	4	1010490-188	INSULATION, SLEEVING, ELECT.
22	30	AR	1897147-106,-108,-112	CABLE CLAMP SLEEVE
10	31	1	1016282- 24	RUBBER GROMMET
10	32	1	1016282- 22	RUBBER GROMMET

MANNED SPACECRAFT CENTER HOUSTON, TEXAS	SIZE A	1900998
SCALE-NONE	REV LTR F	SHEET 6 OF 22

MIL 2084 4-63

INCHES 1 0

GJK CABLE W-58 F 1900998

CONDUCTOR INDIVIDUAL LENGTH NUMBER	ITEM NO.	2	FROM CUT WIRE OR SHIELD STRIP WIRE OR JACKET CIRCUIT POINT	2	T I N	2	TERMINATION SPEC. 1 ITEM NO.	NO.	TO CUT WIRE OR SHIELD STRIP WIRE OR JACKET CIRCUIT POINT	2	T I N	2	TERMINATION SPEC 1 ITEM NO.	NO.
A 13	1		P1-V	22	N		27		P3- 1	22	N		22	
A 14	1		P1-W	22	N		27		P3- 60	22	N		22	
A 15	1		P1-X	22	N		27		P3- 2	22	N		22	
A 16	1		P1-Y	22	N		27		P3- 96	22	N		22	
A 17	1		P1-Z	22	N		27		P3- 95	22	N		22	
A 18	1		P1-A*	22	N		27		E4	37	N			
A 19	1		P1-B*	22	N		27		P3- 93	22	N		22	
A 20	1		P1-C*	22	N		27		P3- 51	22	N		22	
A 21	1		P1-D*	22	N		27		P3-106	22	N		22	
A 22	1		P1-E*	22	N		27		P3- 77	22	N		22	
A 23	1		P1-F*	22	N		27		P3- 65	22	N		22	
A 24	2			280		250	9 10	5		280		250	A 17	7A
							A 16							
A 24A	1		SHLD A24	37	N				E2	37	N			
A 24W			P1-G*	22	N		27		P3- 85	22	N		22	
A 25	2			280		250	9 10	5		280		250	A 17	7A
							A 16							
A 25A	1		SHLD A25	37	N				E2	37	N			

1 THE STD CONDUCTOR TERMINATION FIGURES ARE PER
2 DIMENSIONS ARE IN INCHES AND TWO PLACE DECIMALS.

MANNED SPACECRAFT CENTER HOUSTON, TEXAS | SIZE A | 1900998
SCALE - NONE | REV LTR F | SHEET 10 OF 22

MIL 2088 - 4-63 WIR

GJK CABLE W-58 F 1900998

CONDUCTOR INDIVIDUAL LENGTH NUMBER	ITEM NO.	2	FROM CUT WIRE OR SHIELD STRIP WIRE OR JACKET CIRCUIT POINT	2	T I N	2	TERMINATION SPEC. 1 ITEM NO.	NO.	TO CUT WIRE OR SHIELD STRIP WIRE OR JACKET CIRCUIT POINT	2	T I N	2	TERMINATION SPEC 1 ITEM NO.	NO.
A 25W			P1-H*	22	N		27		P3- 98	22	N		22	
A 26	1		P1-I*	22	N		27		P3- 42	22	N		22	
A 27	5						A 29						A 29	
A 27L			P1-K*	22	N		27		P3- 69	22	N		22	
A 27R			P1-J*	22	N		27		P3- 80	22	N		22	
A 28	2			280		250	9 10	5		280		250	A 17	7A
							A 16							
A 28A	1		SHLD A28	37	N				E2	37	N			
A 28W			P1-M*	22	N		27		P3- 92	22	N		22	
A 29	2			280		250	9 10	5		280		250	A 17	7A
							A 16							
A 29A	1		SHLD A29	37	N				E2	37	N			
A 29W			P1-N*	22	N		27		P3- 74	22	N		22	
A 30	2			280		250	9 10	5		280		250	A 17	7A
							A 16							
A 30A	1		SHLD A30	37	N				E2	37	N			
A 30W			P1-P*	22	N		27		P3- 90	22	N		22	
A 31	2			280		250	9 10	5		280		250	A 17	7A

1 THE STD CONDUCTOR TERMINATION FIGURES ARE PER
2 DIMENSIONS ARE IN INCHES AND TWO PLACE DECIMALS.

MANNED SPACECRAFT CENTER HOUSTON, TEXAS | SIZE A | 1900998
SCALE - NONE | REV LTR F | SHEET 11 OF 22

MIL 2088 - 4-63 WIR

GJK CABLE W-58 F 1900998

CONDUCTOR INDIVIDUAL LENGTH NUMBER	ITEM NO.	2	FROM CUT WIRE OR SHIELD STRIP WIRE OR JACKET CIRCUIT POINT	2	T I N	2	TERMINATION SPEC. 1 ITEM NO.	NO.	TO CUT WIRE OR SHIELD STRIP WIRE OR JACKET CIRCUIT POINT	2	T I N	2	TERMINATION SPEC 1 ITEM NO.	NO.
A 7A	1		SHLD A7	37	N				E1	37	N			
A 7L			P1-J	22	N		27		P3- 12	22	N		22	
A 7R			P1-H	22	N		27		P3- 11	22	N		22	
A 8	5						A 29						A 29	
A 8L			P1-L	22	N		27		P3- 40	22	N		22	
A 8R			P1-K	22	N		27		P3- 41	22	N		22	
A 9	1		P1-N	22	N		27		P3- 43	22	N		22	
A 10	1		P1-P	22	N		27		P3- 71	22	N		22	
A 11	3			230		200	11 12	5		230		200	A 16	7A
							A 16							
A 11A	1		SHLD A11	37	N				E1	37	N			
A 11L			P1-S	22	N		27		P3- 53	22	N		22	
A 11R			DELETED											
A 12	3			230		200	11 12	5		230		200	A 16	7A
							A 16							
A 12A	1		SHLD A12	37	N				E1	37	N			
A 12L			P1-U	22	N		27		P3- 52	22	N		22	
A 12R			DELETED											

1 THE STD CONDUCTOR TERMINATION FIGURES ARE PER
2 DIMENSIONS ARE IN INCHES AND TWO PLACE DECIMALS.

MANNED SPACECRAFT CENTER HOUSTON, TEXAS | SIZE A | 1900998
SCALE - NONE | REV LTR F | SHEET 9 OF 22

MIL 2088 - 4-63 WIR

GJK CABLE W-58 G 1900998

CONDUCTOR INDIVIDUAL LENGTH NUMBER	ITEM NO.	2	FROM CUT WIRE OR SHIELD STRIP WIRE OR JACKET CIRCUIT POINT	2	T I N	2	TERMINATION SPEC. 1 ITEM NO.	NO.	TO CUT WIRE OR SHIELD STRIP WIRE OR JACKET CIRCUIT POINT	2	T I N	2	TERMINATION SPEC 1 ITEM NO.	NO.
							A 16							
A 31A	1		SHLD A31	37	N				E2	37	N			
A 31W			P1-Q*	22	N		27		P3-100	22	N		22	
A 32	2			330		300	9 10	5		330		300	A 17	7A
							A 16							
A 32A	1		SHLD A32	37	N				P1-S*	22	N		27	
A 32L			DELETED											
A 32W			P1-R*	22	N		27		P3- 56	22	N		22	
A 33	2			330		300	9 10	5		330		300	A 17	7A
							A 16							
A 33A	1		SHLD A33	37	N				P1-U*	22	N		27	
A 33W			P1-T*	22	N		27		P3- 48	22	N		22	
A 34	1		P1-V*	22	N		27		P3- 36	22	N		22	
A 35	1		P1-W*	22	N		27		P3- 94	22	N		22	
A 36	4			330		300	13 14	5		330		300	A 15	7A
							A 15							
A 36A	1		SHLD A36	37	N				E3	37	N			
A 36L			P1-Y*	22	N		27		P3- 17	22	N		22	

1 THE STD CONDUCTOR TERMINATION FIGURES ARE PER
2 DIMENSIONS ARE IN INCHES AND TWO PLACE DECIMALS.

MANNED SPACECRAFT CENTER HOUSTON, TEXAS | SIZE A | 1900998
SCALE - NONE | REV LTR G | SHEET 12 OF 22

MIL 2088 - 4-63 WIR

INCHES
0 1 2 3
SUCCESSIVE MIC SCALE ONLY

GJK CABLE W-58 F 1900998

CONDUCTOR INDIVIDUAL LENGTH NUMBER	ITEM NO.	2	FROM CUT WIRE OR SHIELD STRIP WIRE OR JACKET CIRCUIT POINT	2	TIN	2	TERMINATION SPEC. 1 ITEM NO.	NO.	TO CUT WIRE OR SHIELD STRIP WIRE OR JACKET CIRCUIT POINT	2	TIN	2	TERMINATION SPEC 1 ITEM NO.	NO.
A 39R			P1-FF	22N			27		P3- 4	22N			22	
A 39Y			P1-HH	22N			27		P3- 18	22N			22	
A 40	2			230	200		9 10	5		230	200		A 17	7A
							A 16							
A 40A	1		SHLD A40	37N					E5	37N				
A 40W			P2-A	22N			28		P3- 39	22N			22	
A 41	2			230	200		9 10	5		230	200		A 17	7A
							A 16							
A 41A	1		SHLD A41	37N					E5	37N				
A 41W			P2-B	22N			28		P3- 73	22N			22	
A 42	2			230	200		9 10	5		230	200		A 17	7A
							A 16							
A 42A	1		SHLD A42	37N					E5	37N				
A 42W			P2-C	22N			28		P3- 10	22N			22	
A 43	3			230	200		11 12	5		230	200		A 16	7A
							A 16							
A 43A	1		SHLD A43	37N					E5	37N				
A 43L			P2-E	22N			28		P3- 23	22N			22	

1 THE STD CONDUCTOR TERMINATION FIGURES ARE PER
2 DIMENSIONS ARE IN INCHES AND TWO PLACE DECIMALS.

MANNED SPACECRAFT CENTER HOUSTON, TEXAS | SIZE A | 1900998
SCALE - NONE | REV LTR F | SHEET 14 OF 22

MIL 2088 - 4-63 WIR

GJK CABLE W-58 F 1900998

CONDUCTOR INDIVIDUAL LENGTH NUMBER	ITEM NO.	2	FROM CUT WIRE OR SHIELD STRIP WIRE OR JACKET CIRCUIT POINT	2	TIN	2	TERMINATION SPEC. 1 ITEM NO.	NO.	TO CUT WIRE OR SHIELD STRIP WIRE OR JACKET CIRCUIT POINT	2	TIN	2	TERMINATION SPEC 1 ITEM NO.	NO.
A 43R			P2-D	22N			28		P3- 24	22N			22	
A 44	3			230	200		11 12	5		230	200		A 16	7A
							A 16							
A 44A	1		SHLD A44	37N					E5	37N				
A 44L			P2-G	22N			28		P3- 34	22N			22	
A 44R			P2-F	22N			28		P3- 35	22N			22	
A 45	3			230	200		11 12	5		230	200		A 16	7A
							A 16							
A 45A	1		SHLD A45	37N					E5	37N				
A 45L			P2-J	22N			28		P3- 33	22N			22	
A 45R			P2-H	22N			28		P3- 19	22N			22	
A 46	1		P2-K	22N			28		P3- 99	22N			22	
A 47			DELETED											
			DELETED											
A 47A			DELETED											
A 47L			DELETED											
A 47R			DELETED											
A 48			DELETED											

1 THE STD CONDUCTOR TERMINATION FIGURES ARE PER
2 DIMENSIONS ARE IN INCHES AND TWO PLACE DECIMALS.

MANNED SPACECRAFT CENTER HOUSTON, TEXAS | SIZE A | 1900998
SCALE - NONE | REV LTR F | SHEET 15 OF 22

MIL 2088 - 4-63 WIR

GJK CABLE W-58 F 1900998

CONDUCTOR INDIVIDUAL LENGTH NUMBER	ITEM NO.	2	FROM CUT WIRE OR SHIELD STRIP WIRE OR JACKET CIRCUIT POINT	2	TIN	2	TERMINATION SPEC. 1 ITEM NO.	NO.	TO CUT WIRE OR SHIELD STRIP WIRE OR JACKET CIRCUIT POINT	2	TIN	2	TERMINATION SPEC 1 ITEM NO.	NO.
A 36L			P1-Y*	22N			27		P3- 17	22N			22	
A 36R			P1-X*	22N			27		P3- 3	22N			22	
A 36Y			P1-Z*	22N			27		P3- 16	22N			22	
A 37	3			330	300		11 12	5		330	300		A 16	7A
							A 16							
A 37A	1		SHLD A37	37N					E3	37N				
A 37L			P1-BB	22N			27		P3- 27	22N			22	
A 37R			P1-AA	22N			27		P3- 13	22N			22	
A 38	4			330	300		13 14	5		330	300		A 15	7A
							A 15							
A 38A	1		SHLD A38	37N					E3	37N				
A 38L			P1-DD	22N			27		P3- 6	22N			22	
A 38R			P1-CC	22N			27		P3- 20	22N			22	
A 38Y			P1-EE	22N			27		P3- 7	22N			22	
A 39	4			330	300		13 14	5		330	300		A 15	7A
							A 15							
A 39A	1		SHLD A39	37N					E3	37N				
A 39L			P1-GG	22N			27		P3- 5	22N			22	

1 THE STD CONDUCTOR TERMINATION FIGURES ARE PER
2 DIMENSIONS ARE IN INCHES AND TWO PLACE DECIMALS.

MANNED SPACECRAFT CENTER HOUSTON, TEXAS | SIZE A | 1900998
SCALE - NONE | REV LTR F | SHEET 13 OF 22

MIL 2088 - 4-63 WIR

GJK CABLE W-58 F 1900998

CONDUCTOR INDIVIDUAL LENGTH NUMBER	ITEM NO.	2	FROM CUT WIRE OR SHIELD STRIP WIRE OR JACKET CIRCUIT POINT	2	TIN	2	TERMINATION SPEC. 1 ITEM NO.	NO.	TO CUT WIRE OR SHIELD STRIP WIRE OR JACKET CIRCUIT POINT	2	TIN	2	TERMINATION SPEC 1 ITEM NO.	NO.
			DELETED											
A 48A			DELETED											
A 48W			DELETED											
A 49	1		P2-R	22N			28		P3- 14	22N			22	
A 50	1		P2-S	22N			28		P3- 50	22N			22	
A 51	1		P2-T	22N			28		P3- 21	22N			22	
A 52	1		P2-U	22N			28		P3- 70	22N			22	
A 53	2			280	250		9 10	5		280	250		A 17	7A
							A 16							
A 53A	1		SHLD A53	37N					E6	37N				
A 53W			P2-V	22N			28		P3- 82	22N			22	
A 54	1		P2-W	22N			28		P3- 58	22N			22	
A 55	1		P2-X	22N			28		P3- 59	22N			22	
A 56	1		P2-Y	22N			28		P3- 66	22N			22	
A 57	1		P2-Z	22N			28		P3- 78	22N			22	
A 58	1		P2-A*	22N			28		E9	37N				
A 59	1		P2-B*	22N			28		P3- 81	22N			22	
A 60	1		P2-C*	22N			28		P3- 79	22N			22	

1 THE STD CONDUCTOR TERMINATION FIGURES ARE PER
2 DIMENSIONS ARE IN INCHES AND TWO PLACE DECIMALS.

MANNED SPACECRAFT CENTER HOUSTON, TEXAS | SIZE A | 1900998
SCALE - NONE | REV LTR F | SHEET 16 OF 22

MIL 2088 - 4-63 WIR

INCHES
PHOTOGRAPHIC SCALE ONLY

GJK CABLE W-58 F 1900998

CONDUCTOR INDIVIDUAL LENGTH NUMBER	ITEM NO.	2	FROM CUT WIRE OR SHIELD STRIP WIRE OR JACKET CIRCUIT POINT	2	TIN	2	TERMINATION SPEC. 1 ITEM NO.	NO.	TO CUT WIRE OR SHIELD STRIP WIRE OR JACKET CIRCUIT POINT	2	TIN	2	TERMINATION SPEC 1 ITEM NO.	NO.
A 67	2			330	300		9 10	5		330	300		A 17	7A
							A 16							
A 67A	1		SHLD A67	37N					E7	37N				
A 67W			P2-K*	22N			28		P3-102	22N			22	
A 68	1		P2-M*	22N			28		P3- 37	22N			22	
A 69	1		P2-N*	22N			28		P3- 30	22N			22	
A 70	1		P2-P*	22N			28		P3- 31	22N			22	
A 71	1		P2-R*	22N			28		P3- 55	22N			22	
A 72	1		P2-S*	22N			28		P3- 46	22N			22	
A 72	2			330	300		9 10	5		330	300		A 17	7A
							A 16							
A 72A	1		SHLD A72	37N					E7	37N				
A 72W			P2-T*	22N			28		P3- 88	22N			22	
A 73	2			330	300		9 10	5		330	300		A 17	7A
							A 16							
A 73A	1		SHLD A73	37N					E7	37N				
A 73W			P2-U*	22N			28		P3- 87	22N			22	
A 74	2			330	300		9 10	5		330	300		A 17	7A

1 THE STD CONDUCTOR TERMINATION FIGURES ARE PER
2 DIMENSIONS ARE IN INCHES AND TWO PLACE DECIMALS.

MANNED SPACECRAFT CENTER HOUSTON, TEXAS | SIZE A | 1900998
SCALE - NONE | REV LTR F | SHEET 18 OF 22

MIL 2088 - 4-63 WIR

GJK CABLE W-58 F 1900998

CONDUCTOR INDIVIDUAL LENGTH NUMBER	ITEM NO.	2	FROM CUT WIRE OR SHIELD STRIP WIRE OR JACKET CIRCUIT POINT	2	TIN	2	TERMINATION SPEC. 1 ITEM NO.	NO.	TO CUT WIRE OR SHIELD STRIP WIRE OR JACKET CIRCUIT POINT	2	TIN	2	TERMINATION SPEC 1 ITEM NO.	NO.
							A 16							
A 74A	1		SHLD A74	37N					E7	37N				
A 74W			P2-V*	22N			28		P3-101	22N			22	
A 75	2			330	300		9 10	5		330	300		A 17	7A
							A 16							
A 75A	1		SHLD A75	37N					E7	37N				
A 75W			P2-W*	22N			28		P3- 76	22N			22	
A 76	2			380	350		9 10	5		380	350		A 17	7A
							A 16							
A 76A	1		SHLD A76	37N					E8	37N				
A 76W			P2-X*	22N			28		P3- 75	22N			22	
A 77	2			380	350		9 10	5		380	350		A 17	7A
							A 16							
A 77A	1		SHLD A77	37N					E8	37N				
A 77W			P2-Y*	22N			28		P3-105	22N			22	
A 78	2			380	350		9 10	5		380	350		A 17	7A
							A 16							
A 78A	1		SHLD A78	37N					E8	37N				

1 THE STD CONDUCTOR TERMINATION FIGURES ARE PER
2 DIMENSIONS ARE IN INCHES AND TWO PLACE DECIMALS.

MANNED SPACECRAFT CENTER HOUSTON, TEXAS | SIZE A | 1900998
SCALE - NONE | REV LTR F | SHEET 19 OF 22

MIL 2088 - 4-63 WIR

GJK CABLE W-58 F 1900998

CONDUCTOR INDIVIDUAL LENGTH NUMBER	ITEM NO.	2	FROM CUT WIRE OR SHIELD STRIP WIRE OR JACKET CIRCUIT POINT	2	TIN	2	TERMINATION SPEC. 1 ITEM NO.	NO.	TO CUT WIRE OR SHIELD STRIP WIRE OR JACKET CIRCUIT POINT	2	TIN	2	TERMINATION SPEC 1 ITEM NO.	NO.
A 61	1		P2-D*	22N			28		P3- 68	22N			22	
A 62	1		P2-E*	22N			28		P3- 67	22N			22	
A 63	2			280	250		9 10	5		280	250		A 17	7A
							A 16							
A 63A	1		SHLD A63	37N					E6	37N				
A 63W			P2-F*	22N			28		P3- 89	22N			22	
A 64	2			280	250		9 10	5		280	250		A 17	7A
							A 16							
A 64A	1		SHLD A64	37N					E6	37N				
A 64W			P2-G*	22N			28		P3-104	22N			22	
A 65	2			280	250		9 10	5		280	250		A 17	7A
							A 16							
A 65A	1		SHLD A65	37N					E6	37N				
A 65W			P2-H*	22N			28		P3- 97	22N			22	
A 66	2			330	300		9 10	5		330	300		A 17	7A
							A 16							
A 66A	1		SHLD A66	37N					E7	37N				
A 66W			P2-J*	22N			28		P3- 86	22N			22	

1 THE STD CONDUCTOR TERMINATION FIGURES ARE PER
2 DIMENSIONS ARE IN INCHES AND TWO PLACE DECIMALS.

MANNED SPACECRAFT CENTER HOUSTON, TEXAS | SIZE A | 1900998
SCALE - NONE | REV LTR F | SHEET 17 OF 22

MIL 2088 - 4-63 WIR

GJK CABLE W-58 F 1900998

CONDUCTOR INDIVIDUAL LENGTH NUMBER	ITEM NO.	2	FROM CUT WIRE OR SHIELD STRIP WIRE OR JACKET CIRCUIT POINT	2	TIN	2	TERMINATION SPEC. 1 ITEM NO.	NO.	TO CUT WIRE OR SHIELD STRIP WIRE OR JACKET CIRCUIT POINT	2	TIN	2	TERMINATION SPEC 1 ITEM NO.	NO.
A 78W			P2-AA	22N			28		P3- 49	22N			22	
A 79	2			380	350		9 10	5		380	350		A 17	7A
							A 16							
A 79A	1		SHLD A79	37N					E8	37N				
A 79W			P2-BB	22N			28		P3- 38	22N			22	
A 80	1		P2-CC	22N			28		P3- 72	22N			22	
A 81	1		P2-DD	22N			28		P3- 25	22N			22	
A 82	1		E1	37N					E4	37N				
A 83	1		E2	37N					E4	37N				
A 84	1		E3	37N					E4	37N				
A 85	1		E5	37N					E9	37N				
A 86	1		E6	37N					E9	37N				
A 87	1		E7	37N					E9	37N				
A 88	1		E8	37N					E9	37N				
A 89	2			380	350		9 10	5		380	350		A 17	7A
							A 16							
A 89A	1		SHLD A89	37N					E8	37N				
A 89W			P2-I*	22N			28		P3-103	22N			22	

1 THE STD CONDUCTOR TERMINATION FIGURES ARE PER
2 DIMENSIONS ARE IN INCHES AND TWO PLACE DECIMALS.

MANNED SPACECRAFT CENTER HOUSTON, TEXAS | SIZE A | 1900998
SCALE - NONE | REV LTR F | SHEET 20 OF 22

MIL 2088 - 4-63 WIR

INCHES

GJK CABLE W-58 G 1900998

CONDUCTOR			FROM									TO										
INDIVIDUAL LENGTH			CUT WIRE OR SHIELD						TERMINATION SPEC. 1			CUT WIRE OR SHIELD						TERMINATION SPEC 1				
NUMBER	ITEM NO.	2	STRIP WIRE OR JACKET						ITEM NO.		NO.	STRIP WIRE OR JACKET						ITEM NO.			NO.	
			CIRCUIT POINT	2	T I N		2					CIRCUIT POINT	2	T I N		2						
A 91	1		P5-C	25Y								P3-62	10N			22						
A 92	1		P5-B	25Y								P3-29	10N			22						
A 93	1		P6-B	25Y								P3-63	10N			22						
A 94	1		P6-C	25Y								P3-64	10N			22						
A 95	1		P6-D	25Y								P3-84	10N			22						
A 96	1		P6-E	25Y								P3-32	10N			22						
A 97	1		P6-F	25Y								P3-44	10N			22						
A 98	1		P1-M	22N			27					P3-47	22N			22						

1. THE STD CONDUCTOR TERMINATION FIGURES ARE PER
2. DIMENSIONS ARE IN INCHES AND TWO PLACE DECIMALS.

MANNED SPACECRAFT CENTER HOUSTON, TEXAS

SIZE A 1900998

SCALE - NONE REV LTR G SHEET 21 OF 22

MIL 2088 - 4-63 WIR

REVISIONS					
SYM	ZONE	DESCRIPTION	CHG NO.	DATE	APPD.
		SEE SHEET 1 FOR REVISION RECORD			

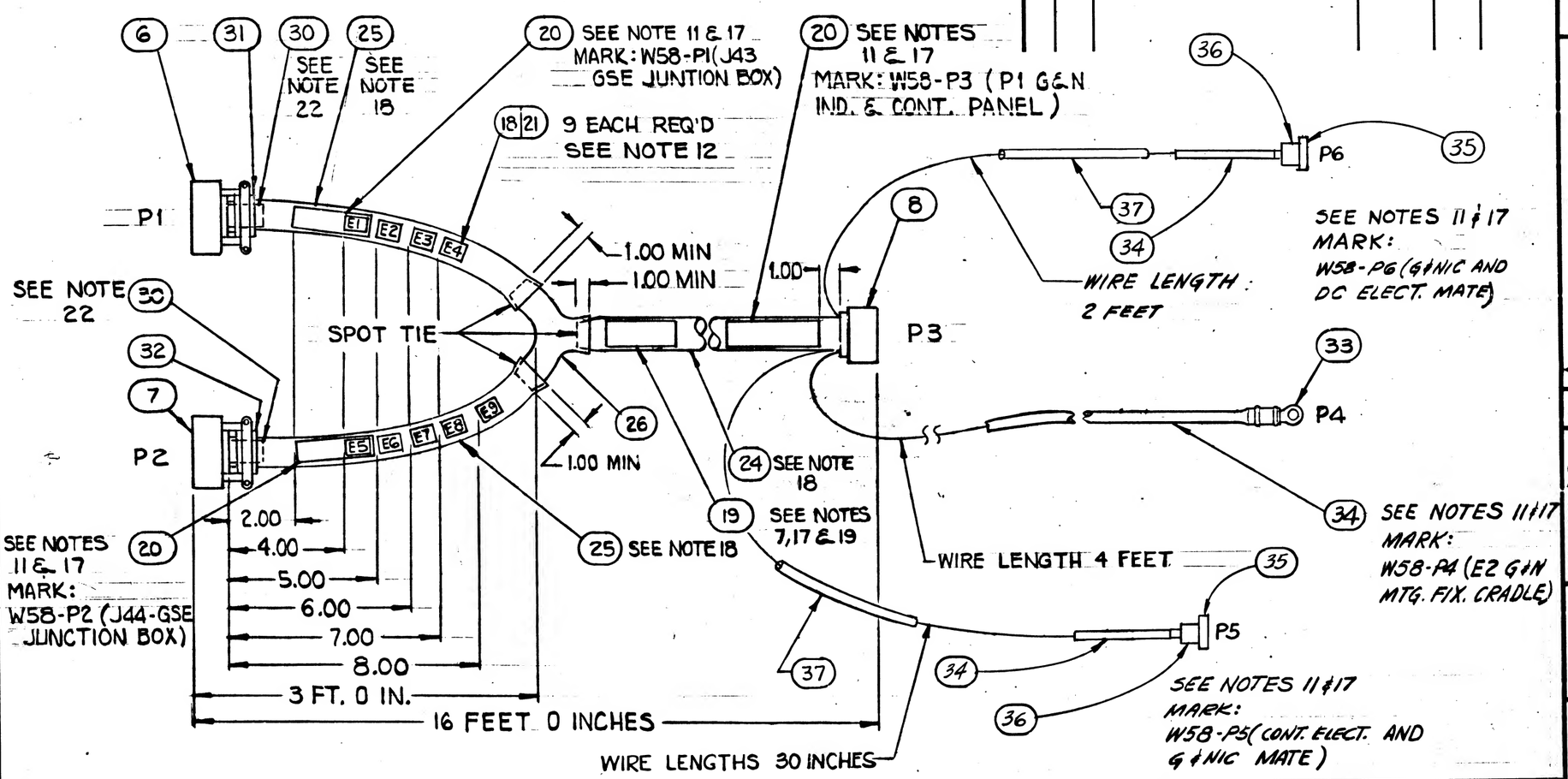

LOCATION TOLERANCE (EXCEPT LENGTH): +.50 -.50

NEXT ASSY	USED ON
APPLICATION	

UNLESS OTHERWISE SPECIFIED DIMENSIONS ARE IN INCHES TOLERANCES ON

FRACTIONS	DECIMALS	ANGLES
+ —	+ —	+ —
− —	− —	− —

DO NOT SCALE THIS DRAWING

MATERIAL —

CONTRACT NAS 9-497

AC SPARK PLUG DIVISION, GMC
MILWAUKEE, WISCONSIN

ACSP PN

DRAWN WEISSERT DATE 11-NOV-63
CHECKED M. MANNING 25-NOV-63
APPROVAL N. ABRAHAM 25-NOV-63
APPROVAL [illegible] 9/14/64
NASA APPROVAL A.C. [illegible] 9/15/64
MIT APPROVAL [illegible] 9/15/64

MANNED SPACECRAFT CENTER
HOUSTON, TEXAS

CABLE, INTERCONNECT W58 ISS, OSS TESTING

CODE IDENT NO. | SIZE C | 1900998

SCALE NONE | SHEET 22 OF 22

MIL 1077C-P

INCHES 0 1 2 PHOTOGRAPHIC SCALE ONLY

REVISIONS

SYM	DESCRIPTION	DATE	APPROVAL
J	CHANGE IN ACCORDANCE WITH CM 302651 TDRR 15380	1 OCT 64	JJJ
K	REVISED PER ECH-306920. TDRR 15981	11 DEC 64	JWH

MANNED SPACECRAFT CENTER HOUSTON, TEXAS

REVISION K

NASA DRAWING NO. 1900998 SHEET 1A OF 23

PENNANT NOTE — GENERAL NOTES

1. SEE CONDUCTOR CHART, PENNANT NOTE 1.
2. SEE CONDUCTOR CHART, PENNANT NOTE 2.
3. INTERPRET DRAWING IN ACCORDANCE WITH STANDARDS PRESCRIBED BY MIL-D-70327.
4. MARK CONDUCTOR IDENTIFICATION ON SINGLE CONDUCTORS PER ND1002019 OMITTING ALL SUFFIX LETTERS EXCEPT A AND B.
5. SPACING OF CONDUCTOR IDENTIFICATION SHALL BE EVERY 15 INCHES MAX. AND AT EACH TERMINATION.
6. SPIRALLING OF THE MARKING IS ALLOWED.
7. IDENTIFY USING DRAWING NO. AND REVISION LETTER PER MIL-STD-130 (ES-267). .12 INCH HIGH CHARACTERS WHITE.
8. Y OR N IN TINNED COLUMN INDICATES YES OR NO.
9. A LETTER WITH AN ASTERISK SUFFIX, INDICATES A LOWER CASE LETTER.
10. VENDOR ITEM - SEE SPECIFICATION CONTROL DRAWING.
11. MARK IDENTIFICATION BAND WITH REFERENCE DESIGNATION AS NOTED .12 INCH HIGH COLOR WHITE, HOT IMPRESSION STAMPING PER ND1002019. CENTRALIZE.
12. MARK SLEEVING WITH REFERENCE DESIGNATIONS AS SHOWN .12 INCH HIGH, COLOR BLACK PER ND1002019.
13. MARK SLEEVING OF MULTI-CONDUCTORS WITH THE CONDUCTOR NUMBER .12 INCH HIGH, COLOR BLACK, PER ND1002019 WHEN SLEEVING ITEM NUMBERS FOLLOW AN A OR T IN THE ACCESSORIES ITEM NUMBER FIELD.

MANNED SPACECRAFT CENTER HOUSTON, TEXAS	SIZE A	1900998	
SCALE-NONE	REV LTR J		SHEET 2 OF 23

MIL 2084 4-63

APPLICATION

NEXT ASSY	USED ON
1901308	1900005-011

REVISIONS TDRR 05663

SYM	DESCRIPTION	DATE	APPROVAL
A	CHANGE IN ACCORDANCE WITH CM193777 TDRR 10029	4 FEB 64	GG
B	CHANGE IN ACCORDANCE WITH CM195032	3 MAR 64	JJJ
C	CHANGE IN ACCORDANCE WITH CM 200712 REVISED CUSOMER DATA (V2-64)	2 APR 64	JWP
D	CHANGE IN ACCORDANCE WITH CM 196300 TDRR 10030	27 MAY 64	R.B.
E	CHANGE IN ACCORDANCE WITH CM197538 TDRR 10688 REVISED CUSTOMER DATA (V2-64)	8 JUNE 64	R.B.
F (H)	CHANGE IN ACCORDANCE WITH CM 197761 PER TDRR 11263	15 JUNE 64	MK
G (M)	CHANGE IN ACCORDANCE WITH CM 198198 TDRR 11261	18 JUN 64	JWP
H	CHANGE IN ACCORDANCE WITH CM 199023 TDRR 12266	30 JUL 64	JWP

REV	K	J	J	J	K	J	J	J	J	J	J	J	J	J	J	J	J	J	J	J	J	J	J
SHEET	1	2	3	4	5	6	7	8	9	10	11	12	13	14	15	16	17	18	19	20	21	22	23

REV STATUS REV K; OF SHEETS SHEET 1A

AC SPARK PLUG DIVISION, GMC MILWAUKEE, WISCONSIN

MANNED SPACECRAFT CENTER HOUSTON, TEXAS

ACSP PN

DRAWN WEISSERT DATE 11-NOV-63

CHECKED DATE 25 NOV 63

APPROVAL DATE 25 NOV 63

APPROVAL DATE

CABLE, INTERCONNECT W58 ISS, OSS TESTING

NASA APPROVAL

MIT APPROVAL

CONTRACT

CODE IDENT NO. SIZE A 1900998 REV K

SCALE SHEET 1 OF 23

PENNANT NOTE — GENERAL NOTES

14. A OR T PREFIX IN THE ACCESSORIES ITEM NUMBER COLUMN INDICATES THE READING POSITION AWAY FROM TERMINATION OR TOWARD TERMINATION RESPECTIVELY, OF THE WIRE MARKER SLEEVE.
15. THE SUFFIX LETTER OF A CONDUCTOR IDENTIFICATION NUMBER INDICATES CONDUCTOR SHIELDING, COLOR, OR MARKING.
    - A - FROM END SHIELD
    - L - WHITE WITH BLUE TRACER OR WHITE WITH LETTER L.
    - R - WHITE WITH RED TRACER OR WHITE WITH LETTER R.
    - Y - WHITE WITH YELLOW TRACER
16. ASSEMBLE CONTACTS IN ALL CONNECTOR GROMMET HOLES.
17. SECURE TO CABLE USING ITEM 22, MARKING TO READ AWAY FROM CONNECTOR.
18. SEAL ZIPPER TUBING PER ND1002153
19. SERIALIZE PER ND1002023
20. ITEM 27 FURNISHED WITH ITEM 6
21. ITEM 28 FURNISHED WITH ITEM 7
22. ITEM 30 SHALL BE SHORTENED WHEN NECESSARY TO AVOID INTERFERENCE WITH FERRULES AND MAY BE CUT LENGTHWISE ON ONE SIDE. SELECT ONE OR MORE OF ITEM 30 AS REQUIRED TO FIT.

MANNED SPACECRAFT CENTER HOUSTON, TEXAS	SIZE A	1900998	
SCALE-NONE	REV LTR J		SHEET 3 OF 23

MIL 2084 4-63

PENNANT LIST OF MATERIALS

NOTE	ITEM	QTY	PART NO	DESCRIPTION
	1	1	1900998-001	WIRE ND1002181, TYPE 1, CLASS 1, WHT, NO. 22AWG 772 FT., 9 IN. TOTAL LENGTH.
	2	1	1900998-002	WIRE ND1002181, TYPE 1, CLASS 4, WHT JKT NO. 22AWG, WHT, 400 FT. 0 IN. TOTAL LENGTH.
	3	1	1900998-003	WIRE ND1002181, TYPE 2, CLASS 4, WHT JKT, NO. 22AWG WHT/BLU, WHT/RED, 64 FT. 0 IN. TOTAL LG.
	4	1	1900998-004	WIRE ND1002181, TYPE 3, CLASS 4, WHT. JKT, NO. 22AWG WHT/BLU, WHT/RED, WHT/YEL 50 FT. 0 IN. TOTAL LENGTH
	5	1	1900998-005	WIRE ND1002181, TYPE 2, CLASS 1, T2, 22AWG WHT WITH LETTER L, WHT WITH LETTER R 35 FT. 0 IN. TOTAL LENGTH.
16	6	1	MS3126F-24-61SX (1897048-612)	CONNECTOR
16	7	1	MS3126F-22-55PW (1897045-551)	CONNECTOR
10	8	1	1010411- 1	CONNECTOR
10	9	21	1000243- 3	FERRULE, ELECT. COND.
10	10	21	1000242- 2	FERRULE, ELECT. COND.
10	11	4	1000243- 8	FERRULE, ELECT. COND.
10	12	4	1000242- 7	FERRULE, ELECT. COND.
10	13	3	1000243- 11	FERRULE, ELECT. COND.
10	14	3	1000242- 11	FERRULE, ELECT. COND.
10	15	6	1010490-196	INSULATION, SLEEVING, ELECT.

MANNED SPACECRAFT CENTER HOUSTON, TEXAS	SIZE A	1900998	
SCALE-NONE	REV LTR J		SHEET 5 OF 23

MIL 2084 4-63

PENNANT LIST OF MATERIALS

NOTE	ITEM	QTY	PART NO	DESCRIPTION
10	16	45	1010490-198	INSULATION, SLEEVING, ELECT.
10	17	27	1010490-200	INSULATION, SLEEVING, ELECT.
10	18	9	1010490-258	INSULATION, SLEEVING, ELECT.
10	19	1	1016128-011	BAND, IDENTIFICATION
10	20	3	1016128-041	BAND, IDENTIFICATION
10	21	9	1016006-002	SPLICE REDUCER
10	22	109	1010464- 2	CONNECTOR, CONTACT, PIN
	23	AR	MIL-T-713	LACING, TAPE, TYPE P, CLASS 2, BLACK (ES-2732 NO. 18)
	24	1	1900998-006	ZIPPER TUBING, ND1002155, TYPE 1, PLASTIC, FLEXIBLE 1.125 IN. DIA X 13 FT. 0 IN. TOT. LG.
	25	2	1900998-007	ZIPPER TUBING, ND1002155, TYPE 1, PLASTIC, FLEXIBLE 1.0 IN. DIA X 6 FT. 0 IN. TOTAL LG.
10	26	1	1016184-002	TRANSITION, HARNESS, 3 FINGER, HEAT SHRINK
20	27	3		CONNECTOR CONTACT, SOCKET
21	28			CONNECTOR CONTACT, PIN
10	29	4	1010490-188	INSULATION, SLEEVING, ELECT.
22	30	AR	1897147-106,-108,-112	CABLE CLAMP SLEEVE
10	31	1	1016282- 24	RUBBER GROMMET
10	32	1	1016282- 22	RUBBER GROMMET

MANNED SPACECRAFT CENTER HOUSTON, TEXAS	SIZE A	1900998	
SCALE-NONE	REV LTR J		SHEET 6 OF 23

MIL 2084 4-63

PENNANT GENERAL NOTES

NOTE

TOLERANCE CHART, UNLESS OTHERWISE SPECIFIED ---

APPLICABLE LENGTH FOR WIRE OR CABLE, STRIP WIRE, STRIP JACKET, CUT WIRE OR CUT SHIELD.	TOLERANCE WIRE OR CABLE	STRIP WIRE	STRIP JACKET	CUT WIRE	CUT SHIELD
UNDER 1 INCH	+ .06-.00	+.03-.00	+.06-.06	+.06-.06	+.06-.06
1 INCH TO 6 INCHES	+ .50-.00	+.06-.00	+.25-.25	+.25-.25	+.25-.25
6 INCHES TO 6 FEET	+1.00-.00		+.50-.50	+.50-.50	+.50-.50
OVER 6 FEET	+2.00-.00				

MANNED SPACECRAFT CENTER HOUSTON, TEXAS	SIZE A	1900998	
SCALE-NONE	REV LTR J		SHEET 4 OF 23

MIL 2084 4-63

PENNANT LIST OF MATERIALS

NOTE	ITEM	QTY	PART NO	DESCRIPTION
10	33	1	1015902- 46	TERMINAL LUG
	34	3	1900998-008	TUBING, MODIFIED POLYVINYL CHLORIDE, FLEXIBLE SHRINK-FIT PER 1016197-006 6 INCH
	35	2	MS24055-2	CONNECTOR
	36	2	MS24018-1	CONNECTOR HOOD
	37	2	1900998-009	TUBING, MODIFIED POLYVINYL CHLORIDE, FLEXIBLE SHRINK-FIT PER 1016197-005 2 FEET
	38	1	1900998-010	WIRE COAXIAL MIL-C-17/69A RG 188 A/U 40 FEET TOTAL LENGTH
	39	4	1000243-006	FERRULE ELECT. CONDUCTOR
	40	4	1000242-005	FERRULE ELECT. CONDUCTOR
	41	2	1016369-388	INNER FEMALE CONTACT
	42	2	1016369-288	OUTER MALE CONTACT
	43	2	1016369-588	HYRING
	44	2	1016369-420	PINS
	45	1	1900998-011	TUBING, MODIFIED POLYVINYL CHLORIDE, FLEXIBLE SHRINK-FIT PER 1016197-007, 4 FEET TOTAL LENGTH
	46	1	1902171-002	POLARIZING SHELL.
	47	1	1016369-140	CONNECTOR
	48	1	1900998-012	ZIPPER TUBING ND1002155, TYPE I PLASTIC FLEXIBLE 2 IN. DIA, 5 INCHES TOTAL LENGTH

MANNED SPACECRAFT CENTER HOUSTON, TEXAS	SIZE A	1900998	
SCALE-NONE	REV LTR K		SHEET 7 OF 23

MIL 2084 4-63

GENERAL NOTES

NOTES

1 SEE CONDUCTOR CHART

2 SEE CONDUCTOR CHART

3 INTERPRET DRAWING IN ACCORDANCE WITH STANDARDS PRESCRIBED BY MIL-D-70327.

4 MARK CONDUCTOR IDENTIFICATION ON SINGLE CONDUCTORS PER ND1002019 OMITTING ALL SUFFIX LETTERS EXCEPT A AND B.

5 SPACING OF CONDUCTOR IDENTIFICATION SHALL BE EVERY 15 INCHES MAX AND AT EACH TERMINATION.

6 SPIRALLING OF THE MARKING IS ALLOWED.

7 IDENTIFY USING DRAWING NO. AND REVISION LETTER PER MIL-STD-130 (ES-267). .12 INCH HIGH CHARACTERS BLACK.

8 Y OR N IN TINNED COLUMN INDICATES YES OR NO.

9 A LETTER WITH AN ASTERISK SUFFIX, INDICATES A LOWER CASE LETTER.

10 VENDOR ITEM - SEE SPECIFICATION CONTROL DRAWING.

11 MARK IDENTIFICATION BAND WITH REFERENCE DESIGNATION AS NOTED .12 INCH HIGH COLOR BLACK, HOT IMPRESSION STAMPING PER ND1002019. CENTRALIZE.

MANNED SPACECRAFT CENTER HOUSTON, TEXAS	SIZE A	1900998	
SCALE - NONE	REV LTR +		SHEET 2 OF 20

MIL 2084 4-63

GENERAL NOTES

NOTES

12 MARK SLEEVING WITH REFERENCE DESIGNATIONS AS SHOWN .12 INCH HIGH, COLOR BLACK PER ND1002019.

13 MARK SLEEVING OF MULTI-CONDUCTORS WITH THE CONDUCTOR NUMBER .12 INCH HIGH, COLOR BLACK, PER ND1002019 WHEN SLEEVING ITEM NUMBERS FOLLOW AN A OR T IN THE ACCESSORIES ITEM NUMBER FIELD.

14 A OR T PREFIX IN THE ACCESSORIES ITEM NUMBER COLUMN INDICATES THE READING POSITION AWAY FROM TERMINATION OR TOWARD TERMINATION RESPECTIVELY, OF THE WIRE MARKER SLEEVE.

15 THE SUFFIX LETTER OF A CONDUCTOR IDENTIFICATION NUMBER INDICATES CONDUCTOR SHIELDING, COLOR, OR MARKING.
- A - FROM END SHIELD
- L - WHITE WITH BLUE TRACER OR WHITE WITH LETTER L.
- R - WHITE WITH RED TRACER OR WHITE WITH LETTER R.
- Y - WHITE WITH YELLOW TRACER

16 ASSEMBLE CONTACTS IN ALL CONNECTOR GROMMET HOLES.

17 SECURE TO CABLE USING ITEM 22, MARKING TO READ AWAY FROM CONNECTOR.

18 SEAL ZIPPER TUBING PER ND 1002153

19 SERIALIZE PER ND 1002023

20 ITEM 27 FURNISHED WITH ITEM 6

21 ITEM 28 FURNISHED WITH ITEM 7

MANNED SPACECRAFT CENTER HOUSTON, TEXAS	SIZE A	1900998	
SCALE - NONE	REV LTR +		SHEET 3 OF 20

MIL 2084 4-63

APPLICATION			REVISIONS		
NEXT ASSY	USED ON	SYM	DESCRIPTION	DATE	APPROVAL
1901308	1900005-011				

FOR INFORMATION ONLY

CLASS B RELEASE TDR No. 05653 DATE 1/7/64

REV	+	+	+	+	+	+	+	+	+	+	+	+	+	+	+	+	+	+	+	+
SHEET	1	2	3	4	5	6	7	8	9	10	11	12	13	14	15	16	17	18	19	20

REV STATUS + OF SHEETS 20

AC SPARK PLUG DIVISION, GMC
MILWAUKEE, WISCONSIN

ACSP PN

MANNED SPACECRAFT CENTER HOUSTON, TEXAS

CABLE, INTERCONNECT W58
ISS, OSS TESTING

DRAWN WEISSERT DATE 11-NOV-63
CHECKED 25 NOV 63
APPROVAL 25 NOV 63
APPROVAL

CODE IDENT NO. SIZE A 1900998 REV +

NASA APPROVAL
MIT APPROVAL
CONTRACT

SCALE SHEET 1 OF 20

GENERAL NOTES

TOLERANCE CHART, UNLESS OTHERWISE SPECIFIED ---

APPLICABLE LENGTH FOR WIRE OR CABLE, STRIP WIRE, STRIP JACKET, CUT WIRE OR CUT SHIELD	TOLERANCE				
	WIRE OR CABLE	STRIP WIRE	STRIP JACKET	CUT WIRE	CUT SHIELD
UNDER 1 INCH	+ .06-.00	+.03-.00	+.06-.06	+.06-.06	+.06-.06
1 INCH TO 6 INCHES	+ .50-.00	+.06-.00	+.25-.25	+.25-.25	+.25-.25
6 INCHES TO 6 FEET	+1.00-.00		+.50-.50	+.50-.50	+.50-.50
OVER 6 FEET	+2.00-.00				

MANNED SPACECRAFT CENTER HOUSTON, TEXAS	SIZE A	1900998	
SCALE - NONE	REV LTR +		SHEET 4 OF 13

MIL 2084 4-63

INCHES 0 1 2
PHOTOGRAPHIC SCALE ONLY

LIST OF MATERIAL

SEE NOTE	ITEM	REQ'D	PART NUMBER	DESCRIPTION
10	13	3	1000243-11	FERRULE, ELECT. COND.
10	14	3	1000242-11	FERRULE, ELECT. COND.
10	15	6	1010490-196	INSULATION, SLEEVING, ELECT.
10	16	48	1010490-198	INSULATION, SLEEVING, ELECT.
10	17	26	1010490-200	INSULATION, SLEEVING, ELECT.
10	18	9	1010490-258	INSULATION, SLEEVING, ELECT.
10	19	1	1016128-011	BAND, IDENTIFICATION
10	20	3	1016128-041	BAND, IDENTIFICATION
10	21	9	1016006-002	SPLICE REDUCER
10	22	108	1010464-1	CONNECTOR, CONTACT, PIN
	23	AR	MIL-T-713	LACING, TAPE, TYPE P, CLASS 2, BLACK (ES 2732 NO.18)
	24	1	1900998-006	ZIPPER TUBING, ND 1002155, TYPE 1, PLASTIC, FLEXIBLE 7/8 DIA X 13 FT. 0 IN. TOTAL LENGTH.
	25	2	1900998-007	ZIPPER TUBING, ND 1002155, TYPE 1, PLASTIC, FLEXIBLE 5/8 DIA X 6 FT. 0 IN. TOTAL LENGTH.
10	26	1	1016184-002	TRANSITION, HARNESS, 3 FINGER, HEAT SHRINK
20	27	61		CONNECTOR CONTACT, SOCKET
21	28	55		CONNECTOR CONTACT, PIN
10	29	4	1010490-188	INSULATION, SLEEVING, ELECT.

MANNED SPACECRAFT CENTER HOUSTON, TEXAS | SIZE A | 1900998
SCALE - NONE | REV LTR + | SHEET 6 OF 13

MIL 2084 4-63

LIST OF MATERIAL

SEE NOTE	ITEM	REQ'D	PART NUMBER	DESCRIPTION
	1	1	1900998-001	WIRE ND 1002181, TYPE 1, CLASS 1, WHITE, NO. 22 AWG 620 FEET, 0 IN. TOTAL LENGTH.
	2	1	1900998-002	WIRE ND 1002181, TYPE 1, CLASS 4, WHT. JACKET, NO. 22 AWG, WHT, 320 FT. 0 IN. TOTAL LENGTH.
	3	1	1900998-003	WIRE ND 1002181, TYPE 2, CLASS 4, WHT JACKET, NO. 22 AWG WHT/BLU, WHT/RED, 180 FT. 0 IN. TOTAL LENGTH.
	4	1	1900998-004	WIRE ND 1002181, TYPE 3, CLASS 4, WHT. JACKET, NO. 22 AWG WHT/BLU, WHT/RED, WHT/YEL 50 FT. 0 IN. TOTAL LENGTH.
	5	1	1900998-005	WIRE ND 1002181, TYPE 2, CLASS 1, T2, 22 AWG WHITE WITH LETTER L, WHT. WITH LETTER R 35 FT. 0 IN. TOTAL LENGTH.
16	6	1	MS3126F-24-61SX	(1897048-612) CONNECTOR
16	7	1	MS3126F-22-55PW	(1897045-551) CONNECTOR
10,16	8	1	1010411-1	CONNECTOR
10	9	26	1000243-3	FERRULE, ELECT. COND.
10	10	26	1000242-2	FERRULE, ELECT. COND.
10	11	11	1000243-8	FERRULE, ELECT. COND.
10	12	11	1000242-7	FERRULE, ELECT. COND.

MANNED SPACECRAFT CENTER HOUSTON, TEXAS | SIZE A | 1900998
SCALE - NONE | REV LTR + | SHEET 5 OF 13

MIL 2084 4-63

CONDUCTOR INDIVIDUAL LENGTH NUMBER	ITEM NO. [2]	FROM CUT WIRE OR SHIELD STRIP WIRE OR JACKET CIRCUIT POINT [2]	TIN [2]	TERMINATION SPEC. [1] ITEM NO.	NO.	TO CUT WIRE OR SHIELD STRIP WIRE OR JACKET CIRCUIT POINT [2]	TIN [2]	TERMINATION SPEC [1] ITEM NO.	NO.
A 1	1	P1-A	22N	27		P3- 91	22N	22	
A 2	3		230 200	11 12	5		230 200	A 16	7A
				A 16					
A 2A	1	SHLD A2	37N			E1	37N		
A 2L		P1-C	22N	27		P3- 32	22N	22	
A 2R		P1-B	22N	27		P3- 44	22N	22	
A 3	2		230 200	9 10	5		230 200	A 17	7A
				A 16					
A 3A	1	SHLD A3	37N			E1	37N		
A 3W		P1-D	22N	27		P3- 84	22N	22	
A 4	2		230 200	9 10	5		230 200	A 17	7A
				A 16					
A 4A	1	SHLD A4	37N			E1	37N		
A 4W		P1-E	22N	27		P3- 54	22N	22	
A 5	1	P1-F	22N	27		P3- 26	22N	22	
A 6	1	P1-G	22N	27		P3- 83	22N	22	
A 7	3		230 200	11 12	5		230 200	A 16	7A
				A 16					

[1] THE STD CONDUCTOR TERMINATION FIGURES ARE PER
[2] DIMENSIONS ARE IN INCHES AND TWO PLACE DECIMALS.

MANNED SPACECRAFT CENTER HOUSTON, TEXAS | SIZE A | 1900998
SCALE - NONE | REV LTR + | SHEET 7 OF 20

MIL 2085 - 4-63 WIR

CONDUCTOR INDIVIDUAL LENGTH NUMBER	ITEM NO. [2]	FROM CUT WIRE OR SHIELD STRIP WIRE OR JACKET CIRCUIT POINT [2]	TIN [2]	TERMINATION SPEC. [1] ITEM NO.	NO.	TO CUT WIRE OR SHIELD STRIP WIRE OR JACKET CIRCUIT POINT [2]	TIN [2]	TERMINATION SPEC [1] ITEM NO.	NO.
A 7A	1	SHLD A7	37N			E1	37N		
A 7L		P1-J	22N	27		P3- 12	22N	22	
A 7R		P1-H	22N	27		P3- 11	22N	22	
A 8	5			A 29				A 29	
A 8L		P1-L	22N	27		P3- 40	22N	22	
A 8R		P1-K	22N	27		P3- 41	22N	22	
A 9	1	P1-N	22N	27		P3- 43	22N	22	
A 10	1	P1-P	22N	27		P3- 71	22N	22	
A 11	3		230 200	11 12	5		230 200	A 16	7A
				A 16					
A 11A	1	SHLD A11	37N			E1	37N		
A 11L		P1-S	22N	27		P3- 53	22N	22	
A 11R		P1-R	22N	27		P3- 62	22N	22	
A 12	3		230 200	11 12	5		230 200	A 16	7A
				A 16					
A 12A	1	SHLD A12	37N			E1	37N		
A 12L		P1-U	22N	27		P3- 52	22N	22	
A 12R		P1-T	22N	27		P3- 61	22N	22	

[1] THE STD CONDUCTOR TERMINATION FIGURES ARE PER
[2] DIMENSIONS ARE IN INCHES AND TWO PLACE DECIMALS.

MANNED SPACECRAFT CENTER HOUSTON, TEXAS | SIZE A | 1900998
SCALE - NONE | REV LTR + | SHEET 8 OF 20

MIL 2085 - 4-63 WIR

INCHES 0 1 2
PHOTOGRAPHIC SCALE ONLY

GJK CABLE W-58 + 1900998

CONDUCTOR NUMBER	INDIVIDUAL LENGTH ITEM NO.	2	FROM CUT WIRE OR SHIELD STRIP WIRE OR JACKET CIRCUIT POINT	2	T I N	2	TERMINATION SPEC. 1 ITEM NO.	NO.	TO CUT WIRE OR SHIELD STRIP WIRE OR JACKET CIRCUIT POINT	2	T I N	2	TERMINATION SPEC 1 ITEM NO.	NO.
A 25W			P1-H*	22	N		27		P3- 98	22	N		22	
A 26	1		P1-I*	22	N		27		P3- 42	22	N		22	
A 27	5						A 29						A 29	
A 27L			P1-K*	22	N		27		P3- 69	22	N		22	
A 27R			P1-J*	22	N		27		P3- 80	22	N		22	
A 28	2			280		250	9 10	5		280		250	A 17	7A
							A 16							
A 28A	1		SHLD A28	37	N				E2	37	N			
A 28W			P1-M*	22	N		27		P3- 92	22	N		22	
A 29	2			280		250	9 10	5		280		250	A 17	7A
							A 16							
A 29A	1		SHLD A29	37	N				E2	37	N			
A 29W			P1-N*	22	N		27		P3- 74	22	N		22	
A 30	2			280		250	9 10	5		280		250	A 17	7A
							A 16							
A 30A	1		SHLD A30	37	N				E2	37	N			
A 30W			P1-P*	22	N		27		P3- 90	22	N		22	
A 31	2			280		250	9 10	5		280		250	A 17	7A

1 THE STD CONDUCTOR TERMINATION FIGURES ARE PER
2 DIMENSIONS ARE IN INCHES AND TWO PLACE DECIMALS.

MANNED SPACECRAFT CENTER HOUSTON, TEXAS | SIZE A | 1900998
SCALE - NONE | REV LTR + | SHEET 10 OF 20

MIL 2085 - 4-63 WIR

GJK CABLE W-58 + 1900998

CONDUCTOR NUMBER	INDIVIDUAL LENGTH ITEM NO.	2	FROM CUT WIRE OR SHIELD STRIP WIRE OR JACKET CIRCUIT POINT	2	T I N	2	TERMINATION SPEC. 1 ITEM NO.	NO.	TO CUT WIRE OR SHIELD STRIP WIRE OR JACKET CIRCUIT POINT	2	T I N	2	TERMINATION SPEC 1 ITEM NO.	NO.
A 13	1		P1-V	22	N		27		P3- 1	22	N		22	
A 14	1		P1-W	22	N		27		P3- 60	22	N		22	
A 15	1		P1-X	22	N		27		P3- 2	22	N		22	
A 16	1		P1-Y	22	N		27		P3- 96	22	N		22	
A 17	1		P1-Z	22	N		27		P3- 95	22	N		22	
A 18	1		P1-A*	22	N		27		E4	37	N			
A 19	1		P1-B*	22	N		27		P3- 93	22	N		22	
A 20	1		P1-C*	22	N		27		P3- 51	22	N		22	
A 21	1		P1-D*	22	N		27		P3-106	22	N		22	
A 22	1		P1-E*	22	N		27		P3- 77	22	N		22	
A 23	1		P1-F*	22	N		27		P3- 65	22	N		22	
A 24	2			280		250	9 10	5		280		250	A 17	7A
							A 16							
A 24A	1		SHLD A24	37	N				E2	37	N			
A 24W			P1-G*	22	N		27		P3- 85	22	N		22	
A 25	2			280		250	9 10	5		280		250	A 17	7A
							A 16							
A 25A	1		SHLD A25	37	N				E2	37	N			

1 THE STD CONDUCTOR TERMINATION FIGURES ARE PER
2 DIMENSIONS ARE IN INCHES AND TWO PLACE DECIMALS.

MANNED SPACECRAFT CENTER HOUSTON, TEXAS | SIZE A | 1900998
SCALE - NONE | REV LTR + | SHEET 9 OF 20

MIL 2085 - 4-63 WIR

GJK CABLE W-58 + 1900998

CONDUCTOR NUMBER	INDIVIDUAL LENGTH ITEM NO.	2	FROM CUT WIRE OR SHIELD STRIP WIRE OR JACKET CIRCUIT POINT	2	T I N	2	TERMINATION SPEC. 1 ITEM NO.	NO.	TO CUT WIRE OR SHIELD STRIP WIRE OR JACKET CIRCUIT POINT	2	T I N	2	TERMINATION SPEC 1 ITEM NO.	NO.
							A 16							
A 31A	1		SHLD A31	37	N				E2	37	N			
A 31W			P1-Q*	22	N		27		P3-100	22	N		22	
A 32	3			330		300	11 12	5		330		300	A 16	7A
							A 16							
A 32A	1		SHLD A32	37	N				E3	37	N			
A 32L			P1-S*	22	N		27		P3- 47	22	N		22	
A 32R			P1-R*	22	N		27		P3- 56	22	N		22	
A 33	3			330		300	11 12	5		330		300	A 16	7A
							A 16							
A 33A	1		SHLD A33	37	N				E3	37	N			
A 33L			P1-U*	22	N		27		P3- 57	22	N		22	
A 33R			P1-T*	22	N		27		P3- 48	22	N		22	
A 34	1		P1-V*	22	N		27		P3- 36	22	N		22	
A 35	1		P1-W*	22	N		27		P3- 94	22	N		22	
A 36	4			330		300	13 14	5		330		300	A 15	7A
							A 15							
A 36A	1		SHLD A36	37	N				E3	37	N			

1 THE STD CONDUCTOR TERMINATION FIGURES ARE PER
2 DIMENSIONS ARE IN INCHES AND TWO PLACE DECIMALS.

MANNED SPACECRAFT CENTER HOUSTON, TEXAS | SIZE A | 1900998
SCALE - NONE | REV LTR + | SHEET 11 OF 20

MIL 2085 - 4-63 WIR

GJK CABLE W-58 + 1900998

CONDUCTOR NUMBER	INDIVIDUAL LENGTH ITEM NO.	2	FROM CUT WIRE OR SHIELD STRIP WIRE OR JACKET CIRCUIT POINT	2	T I N	2	TERMINATION SPEC. 1 ITEM NO.	NO.	TO CUT WIRE OR SHIELD STRIP WIRE OR JACKET CIRCUIT POINT	2	T I N	2	TERMINATION SPEC 1 ITEM NO.	NO.
A 36L			P1-Y*	22	N		27		P3- 17	22	N		22	
A 36R			P1-X*	22	N		27		P3- 3	22	N		22	
A 36Y			P1-Z*	22	N		27		P3- 16	22	N		22	
A 37	3			330		300	11 12	5		330		300	A 16	7A
							A 16							
A 37A	1		SHLD A37	37	N				E3	37	N			
A 37L			P1-BB	22	N		27		P3- 27	22	N		22	
A 37R			P1-AA	22	N		27		P3- 13	22	N		22	
A 38	4			330		300	13 14	5		330		300	A 15	7A
							A 15							
A 38A	1		SHLD A38	37	N				E3	37	N			
A 38L			P1-DD	22	N		27		P3- 6	22	N		22	
A 38R			P1-CC	22	N		27		P3- 20	22	N		22	
A 38Y			P1-EE	22	N		27		P3- 7	22	N		22	
A 39	4			330		300	13 14	5		330		300	A 15	7A
							A 15							
A 39A	1		SHLD A39	37	N				E3	37	N			
A 39L			P1-GG	22	N		27		P3- 5	22	N		22	

1 THE STD CONDUCTOR TERMINATION FIGURES ARE PER
2 DIMENSIONS ARE IN INCHES AND TWO PLACE DECIMALS.

MANNED SPACECRAFT CENTER HOUSTON, TEXAS | SIZE A | 1900998
SCALE - NONE | REV LTR + | SHEET 12 OF 20

MIL 2085 - 4-63 WIR

INCHES 0 1 2
PHOTOGRAPHIC SCALE ONLY

GJK CABLE W-58 + 1900998

CONDUCTOR INDIVIDUAL LENGTH NUMBER	ITEM NO.	2	FROM CUT WIRE OR SHIELD STRIP WIRE OR JACKET CIRCUIT POINT	2	TIN	2	TERMINATION SPEC. 1 ITEM NO.	NO.	TO CUT WIRE OR SHIELD STRIP WIRE OR JACKET CIRCUIT POINT	2	TIN	2	TERMINATION SPEC 1 ITEM NO.	NO.
A 43R			P2-D	22	N		28		P3- 24	22	N		22	
A 44	3			230		200	11 12	5		230		200	A 16	7A
							A 16							
A 44A	1		SHLD A44	37	N				E5	37	N			
A 44L			P2-G	22	N		28		P3- 34	22	N		22	
A 44R			P2-F	22	N		28		P3- 35	22	N		22	
A 45	3			230		200	11 12	5		230		200	A 16	7A
							A 16							
A 45A	1		SHLD A45	37	N				E5	37	N			
A 45L			P2-J	22	N		28		P3- 33	22	N		22	
A 45R			P2-H	22	N		28		P3- 19	22	N		22	
A 46	1		P2-K	22	N		28		P3- 99	22	N		22	
A 47	3			280		250	11 12	5		280		250	A 16	7A
							A 16							
A 47A	1		SHLD A47	37	N				E6	37	N			
A 47L			P2-M	22	N		28		P3- 64	22	N		22	
A 47R			P2-L	22	N		28		P3- 63	22	N		22	
A 48	2			280		250	9 10	5		280		250	A 17	7A

1 THE STD CONDUCTOR TERMINATION FIGURES ARE PER
2 DIMENSIONS ARE IN INCHES AND TWO PLACE DECIMALS.

MANNED SPACECRAFT CENTER HOUSTON, TEXAS | SIZE A | 1900998
SCALE - NONE | REV LTR + | SHEET 14 OF 20

MIL 2085 - 4-63 WIR

GJK CABLE W-58 + 1900998

CONDUCTOR INDIVIDUAL LENGTH NUMBER	ITEM NO.	2	FROM CUT WIRE OR SHIELD STRIP WIRE OR JACKET CIRCUIT POINT	2	TIN	2	TERMINATION SPEC. 1 ITEM NO.	NO.	TO CUT WIRE OR SHIELD STRIP WIRE OR JACKET CIRCUIT POINT	2	TIN	2	TERMINATION SPEC 1 ITEM NO.	NO.
							A 16							
A 48A	1		SHLD A48	37	N				E6	37	N			
A 48W			P2-N	22	N		28		P3- 29	22	N		22	
A 49	1		P2-R	22	N		28		P3- 14	22	N		22	
A 50	1		P2-S	22	N		28		P3- 50	22	N		22	
A 51	1		P2-T	22	N		28		P3- 21	22	N		22	
A 52	1		P2-U	22	N		28		P3- 70	22	N		22	
A 53	2			280		250	9 10	5		280		250	A 17	7A
							A 16							
A 53A	1		SHLD A53	37	N				E6	37	N			
A 53W			P2-V	22	N		28		P3- 82	22	N		22	
A 54	1		P2-W	22	N		28		P3- 58	22	N		22	
A 55	1		P2-X	22	N		28		P3- 59	22	N		22	
A 56	1		P2-Y	22	N		28		P3- 66	22	N		22	
A 57	1		P2-Z	22	N		28		P3- 78	22	N		22	
A 58	1		P2-A*	22	N		28		E9	37	N			
A 59	1		P2-B*	22	N		28		P3- 81	22	N		22	
A 60	1		P2-C*	22	N		28		P3- 79	22	N		22	

1 THE STD CONDUCTOR TERMINATION FIGURES ARE PER
2 DIMENSIONS ARE IN INCHES AND TWO PLACE DECIMALS.

MANNED SPACECRAFT CENTER HOUSTON, TEXAS | SIZE A | 1900998
SCALE - NONE | REV LTR + | SHEET 15 OF 20

MIL 2085 - 4-63 WIR

GJK CABLE W-58 + 1900998

CONDUCTOR INDIVIDUAL LENGTH NUMBER	ITEM NO.	2	FROM CUT WIRE OR SHIELD STRIP WIRE OR JACKET CIRCUIT POINT	2	TIN	2	TERMINATION SPEC. 1 ITEM NO.	NO.	TO CUT WIRE OR SHIELD STRIP WIRE OR JACKET CIRCUIT POINT	2	TIN	2	TERMINATION SPEC 1 ITEM NO.	NO.
A 39R			P1-FF	22	N		27		P3- 4	22	N		22	
A 39Y			P1-HH	22	N		27		P3- 18	22	N		22	
A 40	2			230		200	9 10	5		230		200	A 17	7A
							A 16							
A 40A	1		SHLD A40	37	N				E5	37	N			
A 40W			P2-A	22	N		28		P3- 39	22	N		22	
A 41	2			230		200	9 10	5		230		200	A 17	7A
							A 16							
A 41A	1		SHLD A41	37	N				E5	37	N			
A 41W			P2-B	22	N		28		P3- 73	22	N		22	
A 42	2			230		200	9 10	5		230		200	A 17	7A
							A 16							
A 42A	1		SHLD A42	37	N				E5	37	N			
A 42W			P2-C	22	N		28		P3- 10	22	N		22	
A 43	3			230		200	11 12	5		230		200	A 16	7A
							A 16							
A 43A	1		SHLD A43	37	N				E5	37	N			
A 43L			P2-E	22	N		28		P3- 23	22	N		22	

1 THE STD CONDUCTOR TERMINATION FIGURES ARE PER
2 DIMENSIONS ARE IN INCHES AND TWO PLACE DECIMALS.

MANNED SPACECRAFT CENTER HOUSTON, TEXAS | SIZE A | 1900998
SCALE - NONE | REV LTR + | SHEET 13 OF 20

MIL 2085 - 4-63 WIR

GJK CABLE W-58 + 1900998

CONDUCTOR INDIVIDUAL LENGTH NUMBER	ITEM NO.	2	FROM CUT WIRE OR SHIELD STRIP WIRE OR JACKET CIRCUIT POINT	2	TIN	2	TERMINATION SPEC. 1 ITEM NO.	NO.	TO CUT WIRE OR SHIELD STRIP WIRE OR JACKET CIRCUIT POINT	2	TIN	2	TERMINATION SPEC 1 ITEM NO.	NO.
A 61	1		P2-D*	22	N		28		P3- 68	22	N		22	
A 62	1		P2-E*	22	N		28		P3- 67	22	N		22	
A 63	2			280		250	9 10	5		280		250	A 17	7A
							A 16							
A 63A	1		SHLD A63	37	N				E6	37	N			
A 63W			P2-F*	22	N		28		P3- 89	22	N		22	
A 64	2			280		250	9 10	5		280		250	A 17	7A
							A 16							
A 64A	1		SHLD A64	37	N				E6	37	N			
A 64W			P2-G*	22	N		28		P3-104	22	N		22	
A 65	2			280		250	9 10	5		280		250	A 17	7A
							A 16							
A 65A	1		SHLD A65	37	N				E6	37	N			
A 65W			P2-H*	22	N		28		P3- 97	22	N		22	
A 66	2			330		300	9 10	5		330		300	A 17	7A
							A 16							
A 66A	1		SHLD A66	37	N				E7	37	N			
A 66W			P2-J*	22	N		28		P3- 86	22	N		22	

1 THE STD CONDUCTOR TERMINATION FIGURES ARE PER
2 DIMENSIONS ARE IN INCHES AND TWO PLACE DECIMALS.

MANNED SPACECRAFT CENTER HOUSTON, TEXAS | SIZE A | 1900998
SCALE - NONE | REV LTR + | SHEET 16 OF 20

MIL 2085 - 4-63 WIR

INCHES 0 1 2
PHOTOGRAPHIC SCALE ONLY

GJK CABLE W-58 + 1900998

CONDUCTOR INDIVIDUAL LENGTH NUMBER	ITEM NO. (2)	FROM CUT WIRE OR SHIELD STRIP WIRE OR JACKET	CIRCUIT POINT (2)	T I N (2)	TERMINATION SPEC. (1) ITEM NO.	NO.	TO CUT WIRE OR SHIELD STRIP WIRE OR JACKET	CIRCUIT POINT (2)	T I N (2)	TERMINATION SPEC (1) ITEM NO.	NO.
					A 16						
A 74A	1	SHLD A74	37N				E7	37N			
A 74W		P2-V*	22N		28		P3-101	22N		22	
A 75	2		330	300	9 10	5		330	300	A 17	7A
					A 16						
A 75A	1	SHLD A75	37N				E7	37N			
A 75W		P2-W*	22N		28		P3- 76	22N		22	
A 76	2		380	350	9 10	5		380	350	A 17	7A
					A 16						
A 76A	1	SHLD A76	37N				E8	37N			
A 76W		P2-X*	22N		28		P3- 75	22N		22	
A 77	2		380	350	9 10	5		380	350	A 17	7A
					A 16						
A 77A	1	SHLD A77	37N				E8	37N			
A 77W		P2-Y*	22N		28		P3-105	22N		22	
A 78	2		380	350	9 10	5		380	350	A 17	7A
					A 16						
A 78A	1	SHLD A78	37N				E8	37N			

(1) THE STD CONDUCTOR TERMINATION FIGURES ARE PER
(2) DIMENSIONS ARE IN INCHES AND TWO PLACE DECIMALS.

MANNED SPACECRAFT CENTER HOUSTON, TEXAS | SIZE A | 1900998
SCALE - NONE | REV LTR + | SHEET 18 OF 20

MIL 2085 - 4-63 WIR

GJK CABLE W-58 + 1900998

CONDUCTOR INDIVIDUAL LENGTH NUMBER	ITEM NO. (2)	FROM CUT WIRE OR SHIELD STRIP WIRE OR JACKET	CIRCUIT POINT (2)	T I N (2)	TERMINATION SPEC. (1) ITEM NO.	NO.	TO CUT WIRE OR SHIELD STRIP WIRE OR JACKET	CIRCUIT POINT (2)	T I N (2)	TERMINATION SPEC (1) ITEM NO.	NO.
A 67	2		330	300	9 10	5		330	300	A 17	7A
					A 16						
A 67A	1	SHLD A67	37N				E7	37N			
A 67W		P2-K*	22N		28		P3-102	22N		22	
A 68	1	P2-M*	22N		28		P3- 37	22N		22	
A 69	1	P2-N*	22N		28		P3- 30	22N		22	
A 70	1	P2-P*	22N		28		P3- 31	22N		22	
A 71	1	P2-R*	22N		28		P3- 55	22N		22	
A 72	1	P2-S*	22N		28		P3- 46	22N		22	
A 72	2		330	300	9 10	5		330	300	A 17	7A
					A 16						
A 72A	1	SHLD A72	37N				E7	37N			
A 72W		P2-T*	22N		28		P3- 88	22N		22	
A 73	2		330	300	9 10	5		330	300	A 17	7A
					A 16						
A 73A	1	SHLD A73	37N				E7	37N			
A 73W		P2-U*	22N		28		P3- 87	22N		22	
A 74	2		330	300	9 10	5		330	300	A 17	7A

(1) THE STD CONDUCTOR TERMINATION FIGURES ARE PER
(2) DIMENSIONS ARE IN INCHES AND TWO PLACE DECIMALS.

MANNED SPACECRAFT CENTER HOUSTON, TEXAS | SIZE A | 1900998
SCALE - NONE | REV LTR + | SHEET 17 OF 20

MIL 2085 - 4-63 WIR

GJK CABLE W-58 + 1900998

CONDUCTOR INDIVIDUAL LENGTH NUMBER	ITEM NO. (2)	FROM CUT WIRE OR SHIELD STRIP WIRE OR JACKET	CIRCUIT POINT (2)	T I N (2)	TERMINATION SPEC. (1) ITEM NO.	NO.	TO CUT WIRE OR SHIELD STRIP WIRE OR JACKET	CIRCUIT POINT (2)	T I N (2)	TERMINATION SPEC (1) ITEM NO.	NO.
A 78W		P2-AA	22N		28		P3- 49	22N		22	
A 79	2		380	350	9 10	5		380	350	A 17	7A
					A 16						
A 79A	1	SHLD A79	37N				E8	37N			
A 79W		P2-BB	22N		28		P3- 38	22N		22	
A 80	1	P2-CC	22N		28		P3- 72	22N		22	
A 81	1	P2-DD	22N		28		P3- 25	22N		22	
A 82	1	E1	37N				E4	37N			
A 83	1	E2	37N				E4	37N			
A 84	1	E3	37N				E4	37N			
A 85	1	E5	37N				E9	37N			
A 86	1	E6	37N				E9	37N			
A 87	1	E7	37N				E9	37N			
A 88	1	E8	37N				E9	37N			

(1) THE STD CONDUCTOR TERMINATION FIGURES ARE PER
(2) DIMENSIONS ARE IN INCHES AND TWO PLACE DECIMALS.

MANNED SPACECRAFT CENTER HOUSTON, TEXAS | SIZE A | 1900998
SCALE - NONE | REV LTR + | SHEET 19 OF 20

MIL 2085 - 4-63 WIR

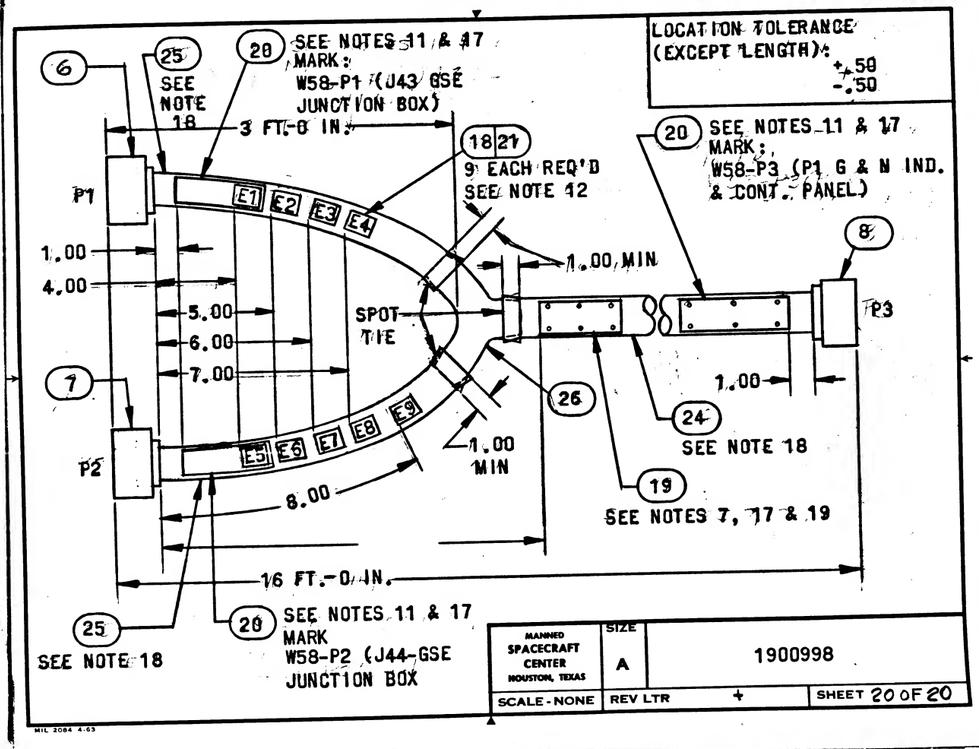

MANNED SPACECRAFT CENTER HOUSTON, TEXAS | SIZE A | 1900998
SCALE - NONE | REV LTR + | SHEET 20 OF 20

MIL 2084 4-63

INCHES 0 1 2
PHOTOGRAPHIC SCALE ONLY